CATALOG SHEET

SPECIFICATIONS

EXTENDED TEMP RANGE (-40C TO +85C)

1. INDUCTANCE: (PRI'S)
1.2mH MIN. @ 0.01v ,100kHz, (25C)
600µh MIN.@0.01V,100kHz,(-40C TO +85C)

2. LEAKAGE INDUCTANCE: (PRI W/ SEC SHORTED)
.5µH MAX @ 1MHz

3. TURNS RATIO:
(PRI TO SEC)= 1 : 1.36CT ± 2%

4. INTERWINDING CAPACITANCE:(PRI TO SEC)
30 pf MAX @1MHz

5. DC RESISTANCE:
PRI =0.6 OHMS MAX
SEC=0.8 OHMS MAX

6. DIELECTRIC STRENGTH: (PRI TO SEC)
1500 VAC FOR 60 SECONDS

7. RETURN LOSS: (WINDING WITH TURNS RATIO 1.36 IS 100 OHM REF.)
51KHz TO 102KHz 12dB MIN
102KHz TO 2.048MHz 18dB MIN
2.048MHz TO 3.072 MHz 14dB MIN

8. CROSS TALK: 65dB OR BETTER

9.COMMON MODE REJECTION RATIO: 50 dB OR BETTER @1MHZ

SCHEMATIC

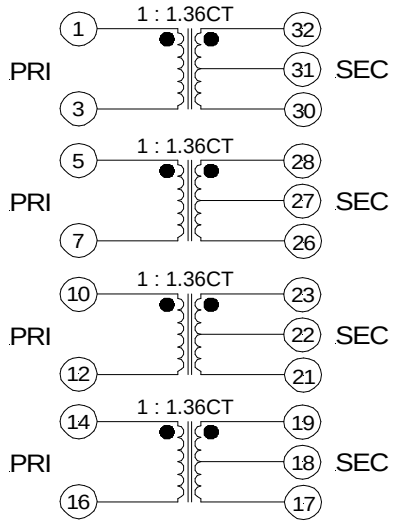

DIMENSIONAL OUTLINE

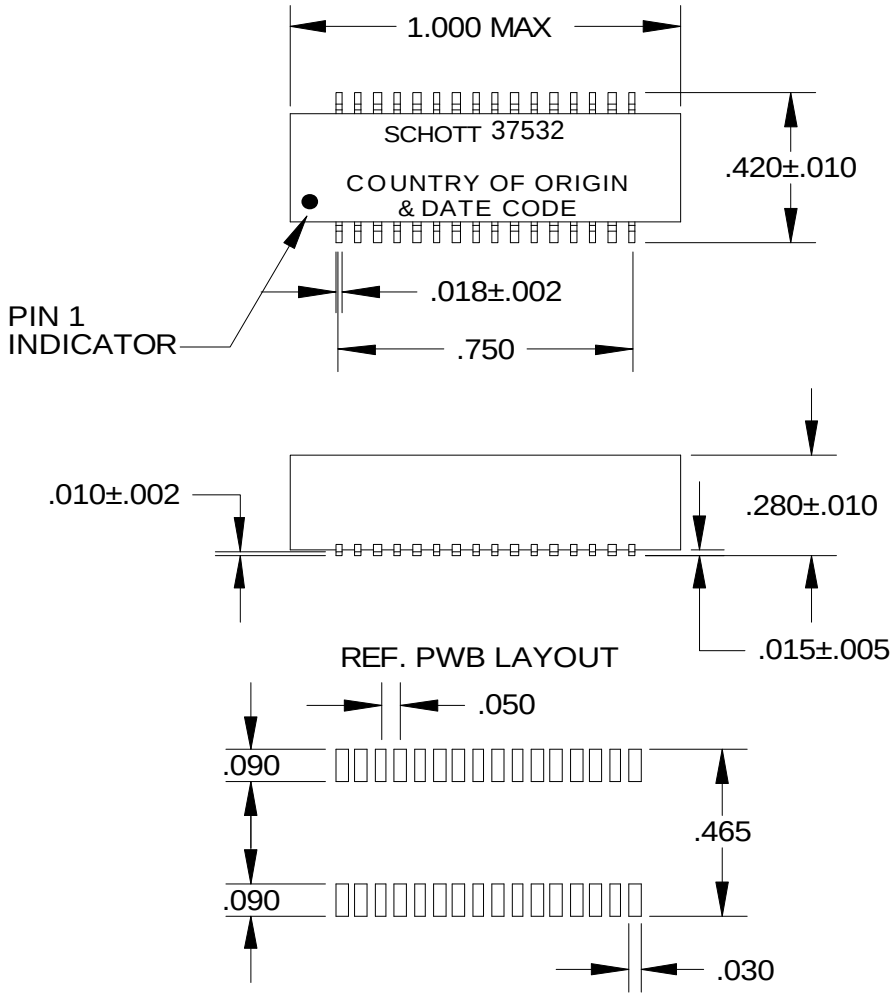

COPLANARITY OF PINS IS LESS THEN OR EQUAL TO 0.004 INCHES

TOLERANCES UNLESS OTHERWISE SPECIFIED	INCHES / DECIMAL	.XX = ± .01	.XXX = ±.005	ANGLES ± 1°
	MILLIMETERS (mm)	.XX = ± 0.20		