New Jersey Semi-Conductor Products, Inc.

20 STERN AVE.
SPRINGFIELD, NEW JERSEY 07081
U.S.A.

TELEPHONE: (973) 376-2922
(212) 227-6005
FAX: (973) 376-8960

36MT

Three Phase Bridge Rectifier, 35A

Features

- Easy connections
- Surge capability up to 500A
- Low thermal resistance
- High thermal conductivity
- Electrically insulated case
- Center hole fixing

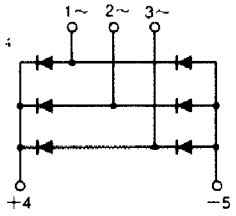

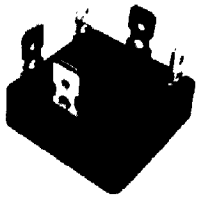

Voltage Ratings (T_C = 25°C unless otherwise noted)

Type number	Voltage code	V_{RRM}, Max. repetitive peak reverse voltage (V)	V_{RSM}, Max. non-repetitive peak reverse voltage (V)	I_{RRM} max @ T_J max (mA)
36MT	80	800	900	2.0
	100	1000	1100	
	120	1200	1300	
	140	1400	1500	
	160	1600	1700	

Electrical Specifications (T_C = 25°C unless otherwise noted)

Parameters	Conditions	Symbol	Values	Units
Maximum DC output current	T_C = 60°C	I_D	35	A
Forward surge current (non-repetitive), one cycle	@ 50 Hz	I_{FSM}	475	A
Maximum forward voltage drop	I_{FM} = 40A, T_J = 25°C	V_{FM}	1.19	V
RMS isolation voltage	f = 50Hz, t = 1ms, all terminals shorted	V_{ISO}	2500	V

Thermal and Mechanical Specifications (T_C = 25°C unless otherwise noted)

Parameters		Symbol	Values	Units
Maximum operating junction temperature range		T_J	- 55 to + 150	°C
Maximum storage temperature range		T_{STG}	- 55 to + 150	°C
Junction to case		$R_{th(j-c)}$	0.9	°C/W
Mounting torque ±10%	Bridge to heatsink	F	2.0	Nm
Approximate weight		W	20	g

Download from alldatasheet.com

Package Outline

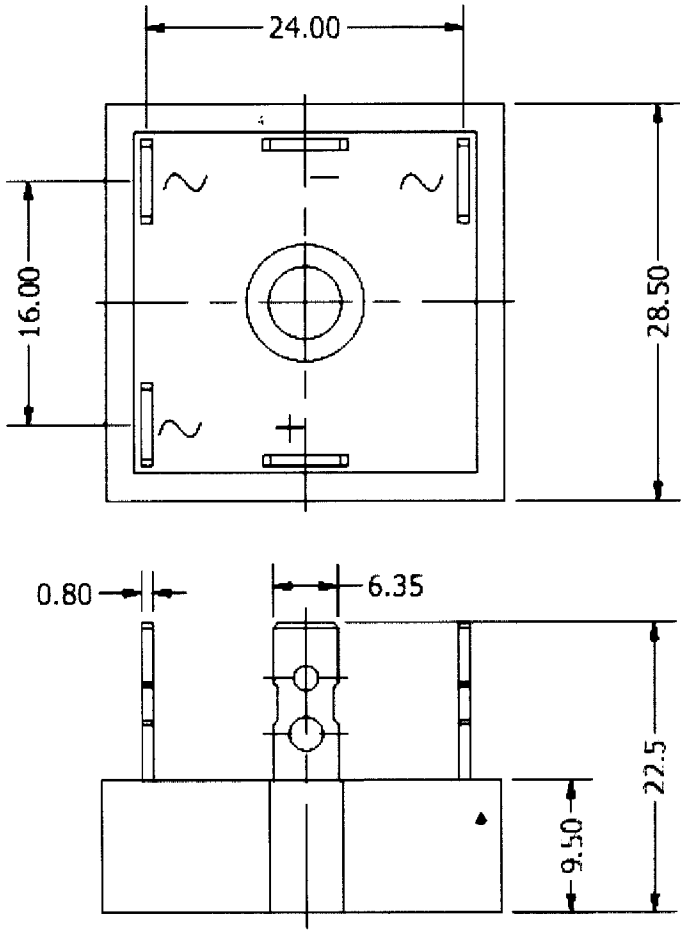

ALL DIMENSIONS IN MM

Ordering Table

36	*MT*	*160*
1	2	3

1 – Current Rating, $I_{F(AV)}$ (36 = 35A, Average)
2 – Three-Phase Bridge
3 – Voltage = code x 10 = V_{RRM}

Download from alldatasheet.com