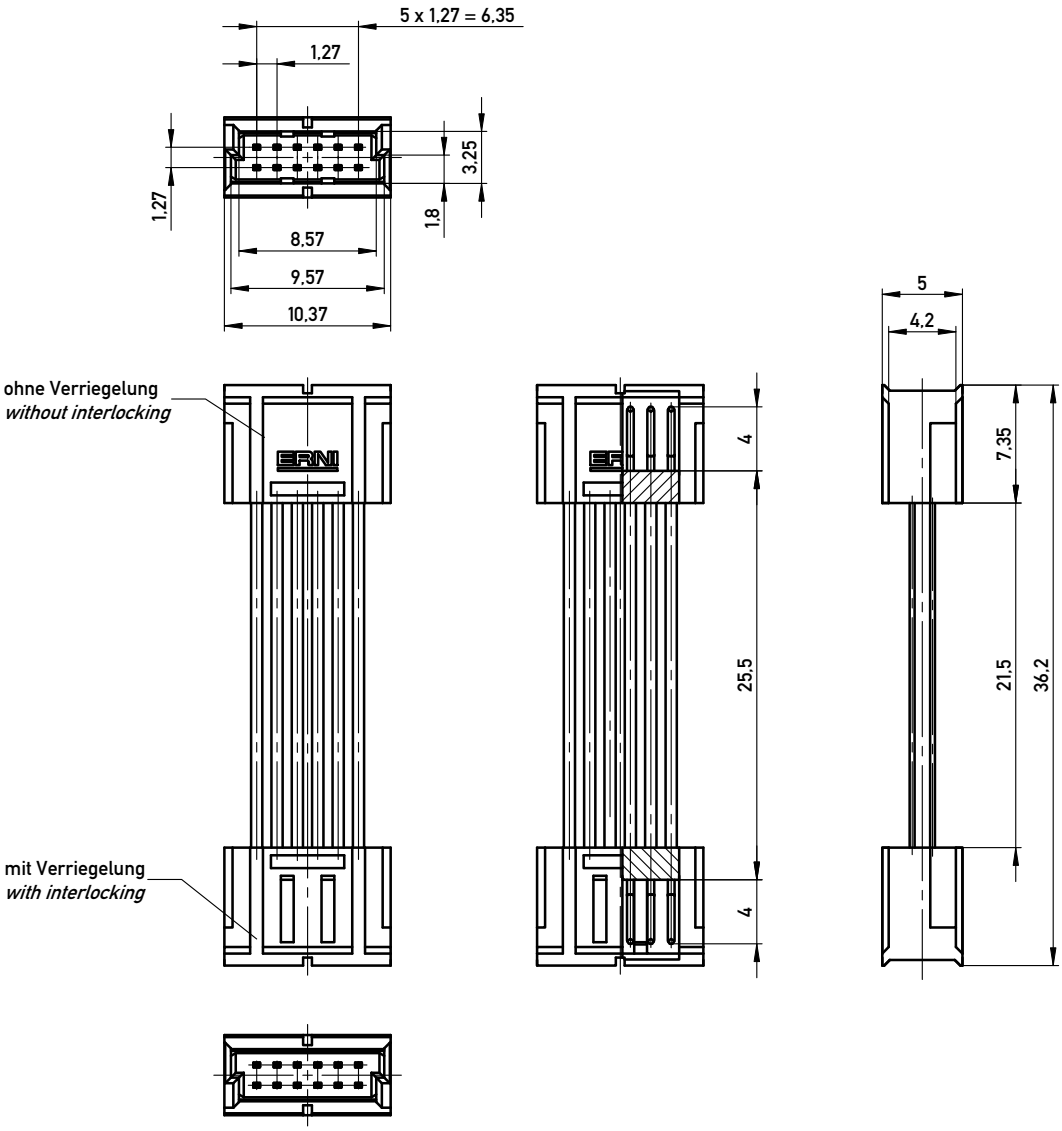

Verpackt in Tray *-tray packaging*
Verpackungseinheit 48 Stück *-packaging unit 48*

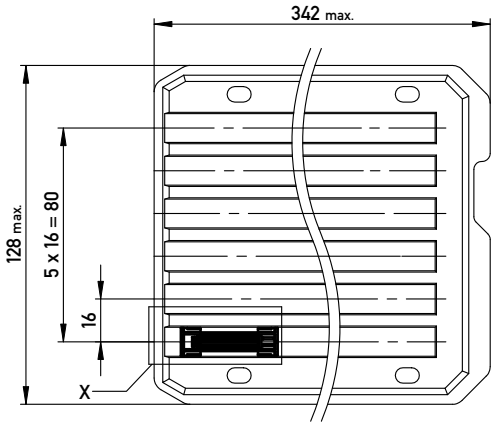

Einzelheit X (M 2:1)
detail X

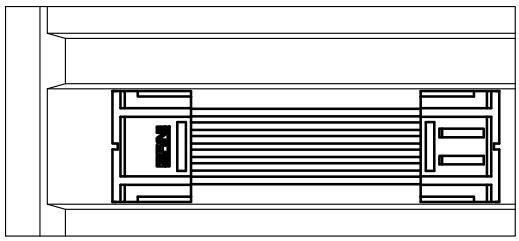

Adapterstück für board-to-board Abstand von 38mm (beidseitig verbaut mit Federleiste: 154805, Low Profile)
Adapter for board-to-board height 38mm (in combination with two female connectors: 154805, low profile)

Information:	Tolerances / All Dimensions in mm	Scale 3:1	
All rights reserved. Only for Information. To ensure that this is the latest version of this drawing, please contact one of the ERNI companies before using.	Subject to modification without prior notice. Drawing will not be updated.	Designation: 1,27 DRC Adapterstück BTB 38mm *12-polig*	
E01 / 25.06.2008 (Index / Date)	www.ERNI.com	364103	I / A3
		Class: DRCBTB	

Copyright by ERNI GmbH
Proprietary notice pursuant to ISO 16016 to be observed.