DWG NO.	SH	REV
36-00029-07	1	C1

PROPRIETARY DATA:
This document and information contained may not be reproduced, used or disclosed without prior written permission of WESTCOR a division of VICOR Corporation.

REVISIONS				
ECO	REV	DESCRIPTION	DATE	APPROVED
687	A	CHANGED MATERIAL	7-25-97	RBD
730	B	CHG: NOTE 2.1 , WAS: L = 88 UH.	12-18-97	RBD
1023	C	CHG: NOTES 2.1, & 3.3 PER ECO	05-15-00	RBD
---	C1	ADD PERMACORE 87-9040-26	11/10/00	RBD

NOTES:UNLESS OTHERWISE SPECIFIED

1. MATERIALS: UL RECOGNIZED 94V-2 FLAMMABILITY RATING CLASS B (130°C) REQUIRED.

1.1 CORE: TOROID, u = 5000

MAGNETICS: ZJ-43806-TC OR
PERMACOR: 87-9040-26

1.2 WIRE: U.L. RECOGNIZED 130°C RATING MAGNE I
1.3 OUTER WRAP: 3M #11 OR #69 OR PERMASIL #213 OR 286

2. SPECIFICATIONS:

2.1 L = 82.5 uH MIN/COIL (1 KHZ, <1Vrms)
2.2 DCR = 0.6 mOHMS MAX/COIL
2.3 POWER LOSS = 4.3 W MAX @ 60A/COIL
2.4 HI-POT TEST COIL TO COIL, 250VDC TO INSURE INTEGRITY OF WINDING INSULATION COVERING HAS NOT BEEN BREACHED.

3. CONSTRUCTION:

3.1 WIND COILS EVENLY SPACED (NOTE POLARITY)
3.2 REMOVE INSULATION AND TIN LEADS APPROX FLUSH WITH THE COIL, AS SHOWN (I.E. COIL MUST REST FLAT ON PCB). LEADS MUST BE TANGENT TO THE CORE.
3.3 WRAP INDUCTOR WITH TAPE, (PER NOTE 1.3). MARK PART NUMBER AND REVISION IN (BLACK) APPROX. WHERE SHOWN, USING A PERMANENT MARKING METHOD.

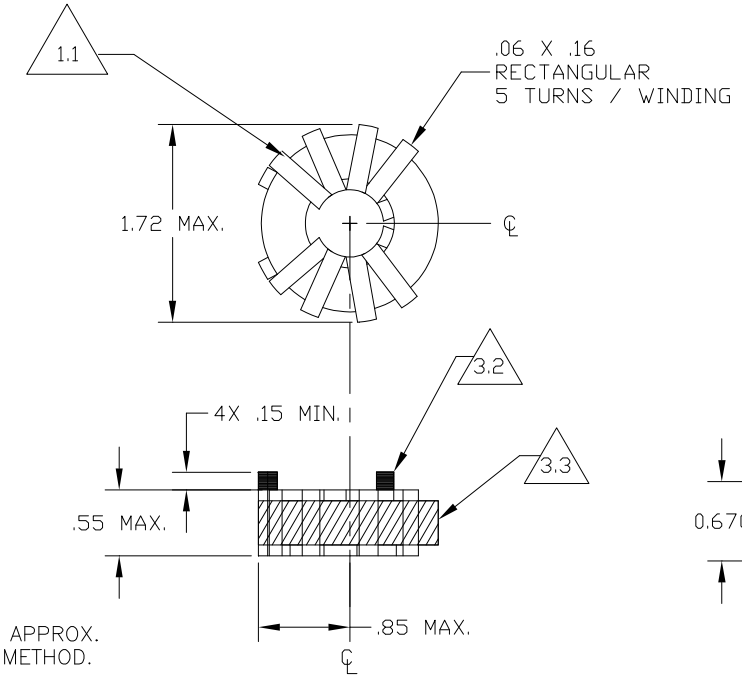

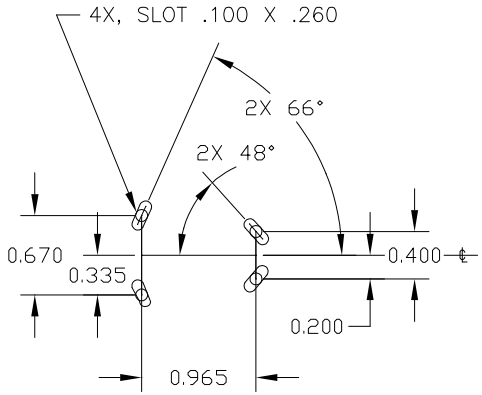

MTG HOLE PATTERN
TOL.: ±.005 SCALE: 1/1

		UNLESS OTHERWISE SPECIFIED DIMENSIONS ARE IN INCHES TOLERANCES ARE: FRACTIONS ± --- DECIMALS .XX ± .05 .XXX ± .020 ANGLES ± 3°	CONTRACT NO. ---	WESTCOR a division of VICOR Corp.	
		MATERIAL SEE NOTES	APPROVALS / DRAWN M.E. ITURRALDE	DATE 12/3/96	IND COMMON MODE 110uH 60A
			CHECKED L.KING	7/25/97	
---	SEE MIS	FINISH ---	APPROVED R.B.DRABING	7/25/97	SIZE B / CAGE CODE --- / DWG NO. 36-00029-07 / REV C1
NEXT ASSY	USED ON		DESIGNED R.CABALLERO	12/03/96	SCALE NTS / FILENAME 36-00029-07.DWG / SHEET 1 OF 1
APPLICATION		DO NOT SCALE DRAWING			