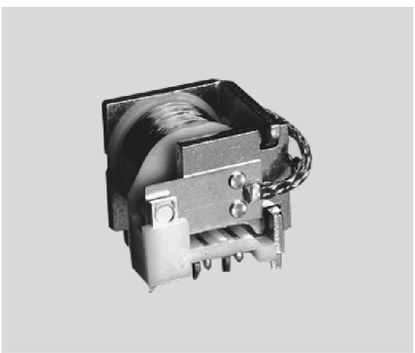

O/E/N 35H

HEAVY DUTY AUTOMOTIVE POWER RELAY

FEATURES

- Direct PCB Mountable
- Cost Effective
- Suitable for various loads
- Miniature Size
- Heavy Duty

APPLICATION

- Direction Indicators
- Air-Conditioning Systems
- Wiper Controls
- Head Lamp Control
- Starter Motors
- Ventilation Motors

TECHNICAL DATA FOR CONTACT SIDE :

Model			**35HA**	**35HB**
Areas of Application			**RESISTIVE / INDUCTIVE LOAD**	**HEAD LAMP / CAPACITIVE LOADS**
Contact Configuration		:	1A	1A
Contact Material		:	Silver Cadmium Oxide	Silver Tin Oxide
Contact Rating at 23°C -	12VDC	:	40A (Res.)	40A (Lamp)
	24VDC	:	20A (Res.)	20A (Lamp)
Electrical Life Operations Min.		:	1×10^5	1×10^5
Mechanical Life Operations Min.		:	1×10^7	1×10^7
Contact Voltage Drop at 10 A (Min)		:	60mV	60mV
Maximum Switching Current @ 12.8 VDC For 3 Sec.		:	150A	150A

GENERAL DATA FOR COIL SIDE

Nominal Coil Power	:	1.6W (Approx)
Operating Power	:	0.9W (Approx)
Operate Time*	:	10 milli Seconds
Release Time*	:	5 milli Seconds

* At nominal voltage without coil suppression (excluding bounce)

OPERATING CONDITIONS

Ambient Temperature	:	-40°C to +85°C
Maximum Temperature	:	155°C
Dielectric Strength	:	500VRMS
Insulation Resistance	:	100 Meg. Ohms Min.
		At 500 VDC, 25°C RH 50
Vibration Resistance (with out change in the switching state>10μS)	:	10-100Hz 20 - 40g
Shock Resistance (with out change in the switching state>10μS)	:	30g, 8mS

CIRCUIT DIAGRAM

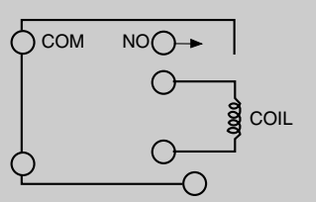

HOW TO ORDER

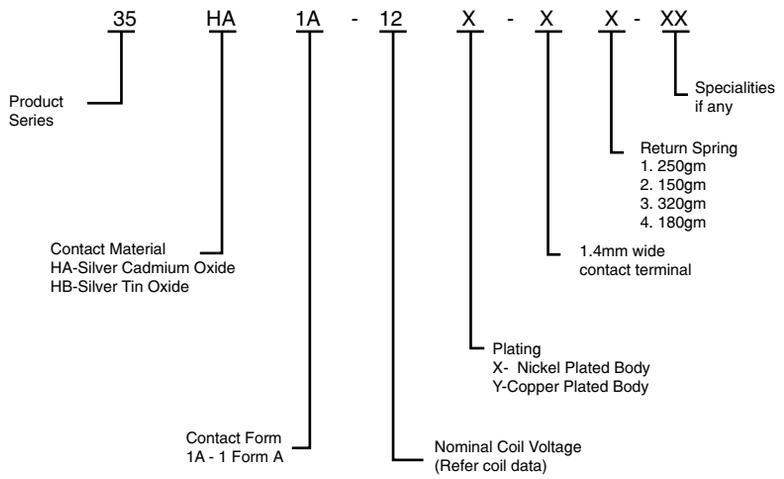

COIL DATA

Nominal Voltage VDC	**Pick-up Voltage VDC (Max)	Drop-out Voltage VDC (Min)	Coil Resistance Ohms ± 10%
6	5	0.6	35
9	7	0.9	55
12	9	1.2	88
18	14	1.8	260
24	18	2.4	400
48	36	4.8	1700

**Lower pick-up Voltages available on request

DRILLING PATTERN

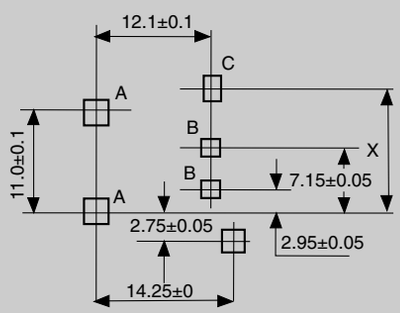

DIM - X	SLOT - A	SLOT - B	SLOT - C
13.15±0.1	1.7±0.1 SQ	1.1±0.1 SQ	2±0.1 x 1.1±0.1

Note:
For holes in place of slots use Ø2.3 holes instead of slots A & Ø1.3 holes instead of slots B & Ø2.1 holes instead of slots C

DIMENSIONS

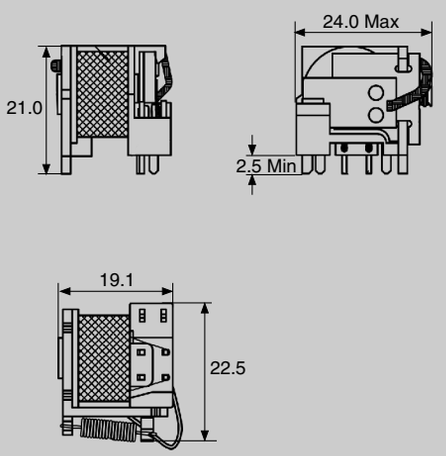

AVAILABLE ON REQUEST

- Special coil resistance & pick-up
- Extra Braided wire
- High Temperature winding wire
- **For other custom solutions consult factory**