This document was generated on 06/01/2010

PLEASE CHECK WWW.MOLEX.COM FOR LATEST PART INFORMATION

Part Number: 0359030096
Status: Active
Overview: bulb_sockets
Description: Positive Silicone Rubber Wire Seal for Sealed PT Bulb Socket

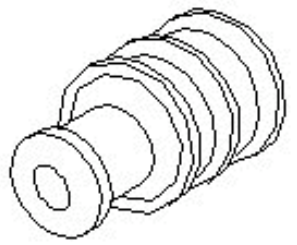

Series image - Reference only

Documents:
Drawing (PDF)
RoHS Certificate of Compliance (PDF)
Product Specification PS-35842-001 (PDF)

General

Product Family	Accessories
Series	35903
Component Type	Wire Seal
Overview	bulb_sockets
Product Name	Bulb Socket

Physical

Breakaway	No
Circuits (Loaded)	N/A
Lock to Mating Part	No
Number of Rows	0
Packaging Type	Bag
Temperature Range - Operating	-40°C to +120°C

Material Info

Reference - Drawing Numbers

Product Specification	PS-35842-001
Sales Drawing	SD-35903-0096

EU RoHS
ELV and RoHS Compliant
REACH SVHC
Not Reviewed
Halogen-Free Status
Halogen-Free

China RoHS

Need more information on product environmental compliance?

Email productcompliance@molex.com
For a multiple part number RoHS Certificate of Compliance, click here

Please visit the Contact Us section for any non-product compliance questions.

Search Parts in this Series
35903Series

Use With
35407 Female Terminal . 35825 Automotive Horn Female Housing

This document was generated on 06/01/2010

PLEASE CHECK WWW.MOLEX.COM FOR LATEST PART INFORMATION

NOTES

△D2 1.MATERIAL:LUBRICATED SILICONE RUBBER
COLOR;BROWN

2.APPLICABLE WIRE SIZE:AVS0.5~0.85SQ

△D1 3.APPLICABLE TERMINAL:35464-8000

4.APPLICABLE SOCKET:35842,35843

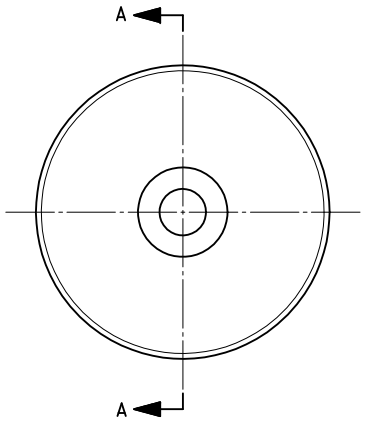

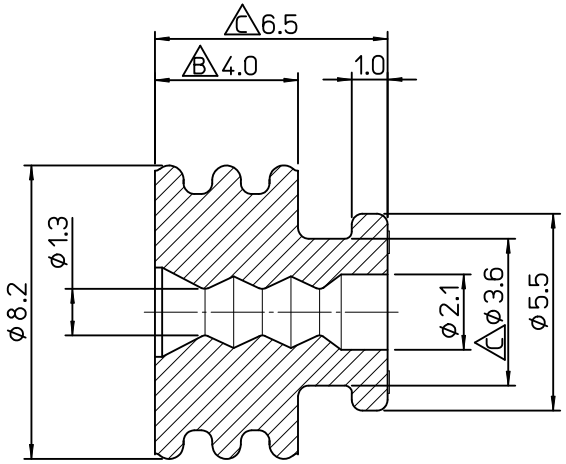

SECTION A-A

<TABLE 1>

359030096	35903-0096
MATERIAL NO.	ORDER NO.

REVISED			
EC NO: KOR2010-0141	DRWN:EOKIM	CH'KD:WYYANG	APPR:YUNSIKKIM
2010/03/10	2010/03/10	2010/03/11	
DESCRIPTION			
D2			REV

QUALITY SYMBOLS

▼=0

Ⓒ=0

GENERAL TOLERANCES (UNLESS SPECIFIED)

	mm	INCH
4 PLACES	± ---	± ---
3 PLACES	± ---	± ---
2 PLACES	± 0.1	± ---
1 PLACE	± 0.2	± ---
ANGULAR ± 1 °		

DRAFT WHERE APPLICABLE MUST REMAIN WITHIN DIMENSIONS

DIMENSION STYLE	SCALE	DESIGN UNITS	
MM ONLY	5:1	METRIC	◎ THIRD ANGLE PROJECTION

DRAWN BY	DATE
YSIKKIM	1999/05/26
CHECKED BY	DATE
BKCHOI	1999/05/26
APPROVED BY	DATE
CWLEE	1999/05/26

TITLE

WIRE SEAL FOR POSITIVE TERMINAL

molex MOLEX INCORPORATED

MATERIAL NO.	DOCUMENT NO.	SHEET NO.
SEE TABLE1	SD-35903-0096	1 OF 1

SIZE A4

THIS DRAWING CONTAINS INFORMATION THAT IS PROPRIETARY TO MOLEX INCORPORATED AND SHOULD NOT BE USED WITHOUT WRITTEN PERMISSION