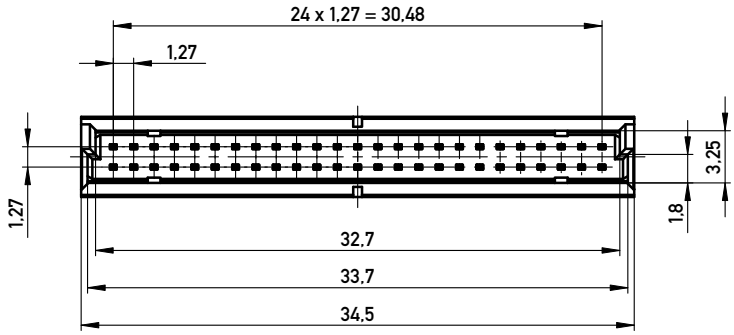


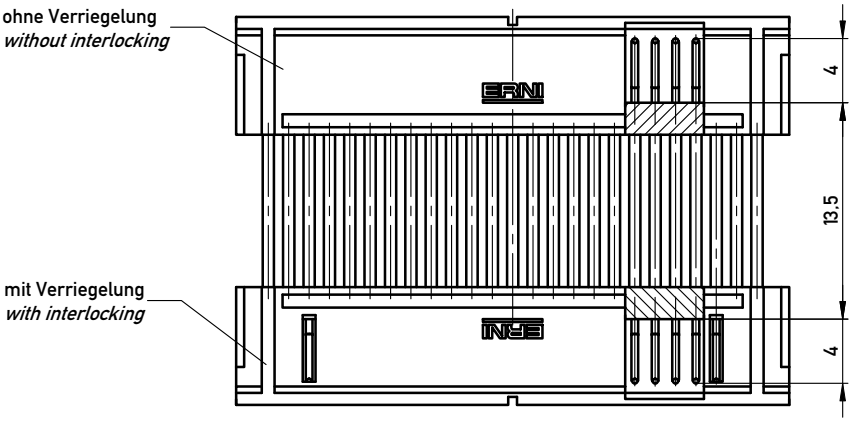


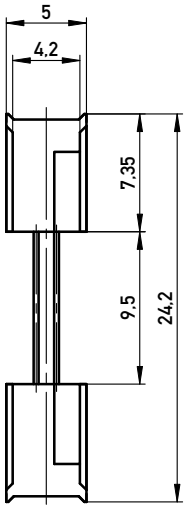


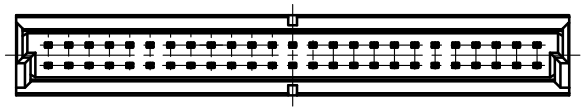

Verpackt in Tray *-tray packaging*
Verpackungseinheit 26 Stück *-packaging unit 26*

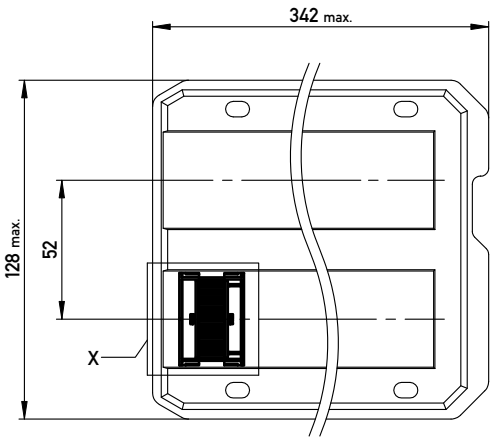


Einzelheit X (M 2:1)
*detail X*

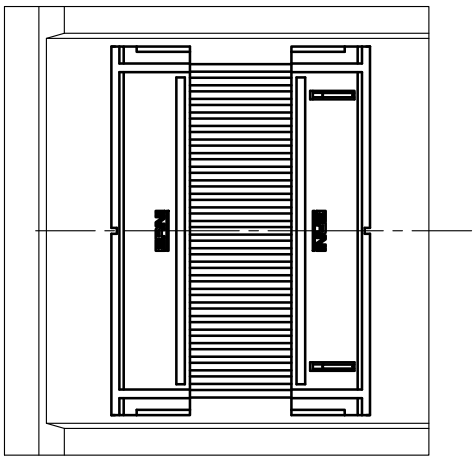

Adapterstück für board-to-board Abstand von 26mm (beidseitig verbaut mit Federleiste: 154807, Low Profile)
*Adapter for board-to-board height 26mm (in combination with two female connectors: 154807, low profile)*

| | | | |
|---|---|---|---|
| Information: | Tolerances: All Dimensions in mm | Scale 3:1 | |
| All rights reserved. Only for Information. To ensure that this is the latest version of this drawing, please contact one of the ERNI companies before using. | Subject to modification without prior notice. Drawing will not be updated. | Designation: 1,27 DRC Adapterstück BTB 26mm *50-polig* | |
| E01 / 18.06.2008 (Index / Date) | www.ERNI.com | 354310 | I / A3 |
| | | Class: DRCBTB | |

Copyright by ERNI GmbH
Proprietary notice pursuant to ISO 16016 to be observed.