This document was generated on 06/07/2010

PLEASE CHECK WWW.MOLEX.COM FOR LATEST PART INFORMATION

Part Number: 0353030250
Status: Active
Description: 2.00mm (.079") Pitch Wire-to-Board Header, Vertical, Blade Pin, Shrouded, 2 Circuits

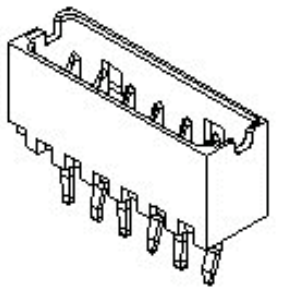

Series image - Reference only

Documents:

3D Model
Drawing (PDF)
Product Specification PS-35303-001 (PDF)
RoHS Certificate of Compliance (PDF)

Agency Certification

CSA	LR 19980
UL	E29179

General

Product Family	PCB Headers
Series	53014
Application	Wire-to-Board
Product Name	N/A

Physical

Breakaway	No
Circuits (Loaded)	2
Circuits (maximum)	2
Color - Resin	Natural
Durability (mating cycles max)	30
First Mate / Last Break	No
Flammability	94V-0
Glow-Wire Compliant	No
Guide to Mating Part	No
Keying to Mating Part	None
Lock to Mating Part	Yes
Material - Metal	Phosphor Bronze
Material - Plating Mating	Tin
Material - Plating Termination	Tin
Material - Resin	Nylon
Number of Rows	1
Orientation	Vertical
PC Tail Length (in)	0.138 In
PC Tail Length (mm)	3.50 mm
PCB Locator	No
PCB Retention	Yes
PCB Thickness Recommended (in)	0.062 In
PCB Thickness Recommended (mm)	1.60 mm
Packaging Type	Tube
Pitch - Mating Interface (in)	0.079 In
Pitch - Mating Interface (mm)	2.00 mm
Plating min: Mating (µin)	32
Plating min: Mating (µm)	0.80
Plating min: Termination (µin)	32
Plating min: Termination (µm)	0.80
Polarized to PCB	No
Shrouded	Partial
Stackable	No
Surface Mount Compatible (SMC)	No
Temperature Range - Operating	-20°C to +85°C
Termination Interface: Style	Through Hole

EU RoHS
ELV and RoHS Compliant
REACH SVHC
Not Reviewed
Halogen-Free Status
Not Halogen-Free

China RoHS

Need more information on product environmental compliance?

Email productcompliance@molex.com
For a multiple part number RoHS Certificate of Compliance, click here

Please visit the Contact Us section for any non-product compliance questions.

Search Parts in this Series
53014Series

Mates With
51004 Wire-to-Board Housing

Electrical

Current - Maximum per Contact	2A
Voltage - Maximum	125V

Material Info

Reference - Drawing Numbers

Packaging Specification	PK-35303-001
Product Specification	PS-35303-001
Sales Drawing	SD-35303-001, SD-35303-010

This document was generated on 06/07/2010

PLEASE CHECK WWW.MOLEX.COM FOR LATEST PART INFORMATION

DWG. NO. SD-35303-001

SIMILAR ITEM

PROJECT NO.

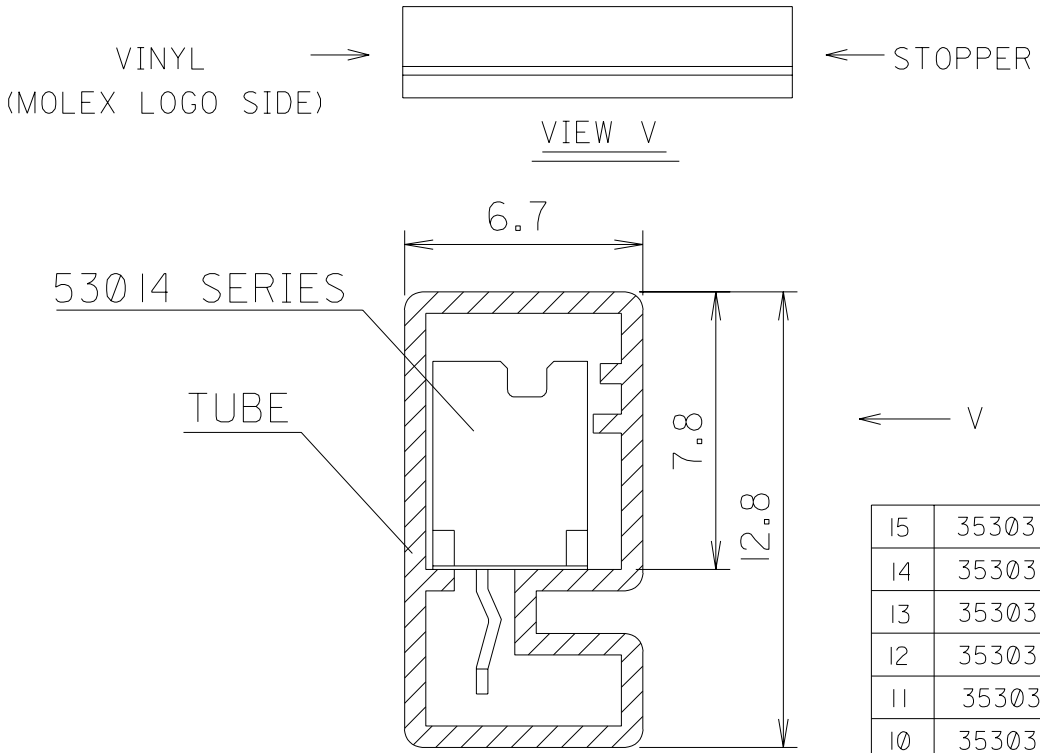

NOTES
1. TUBE : STOPPER & VINYL LOCKING TYPE
2. THICKESS : 0.6t
3. LENGTH : 550mm

LEGEND 35303-** 5 *
- COLOR : 0 --- NATURAL
  1 --- BLACK
  2 --- RED
  3 --- YELLOW
  4 --- BLUE
- CKT (02, 03, 04, ...)

CKTS	MAT'L NO.	ENG NO.	CKTS	MAT'L NO.	ENG NO.	USED ON
15	35303155*	35303-155*	8	35303085*	35303-085*	53014 SERIES
14	35303145*	-145*	7	35303075*	-075*	
13	35303135*	-135*	6	35303065*	-065*	
12	35303125*	-125*	5	35303055*	-055*	
11	35303115*	-115*	4	35303045*	-045*	
10	35303105*	-105*	3	35303035*	-035*	
9	35303095*	35303-095*	2	35303025*	35303-025*	

NEW RELEASED
EC NO. KOR2004-0124
DRWN: K.S.KIM (040324)
CH'K: J.K.OH
APPR: C.W.LEE

DESCRIPTION

A

REV

QUALITY SYMBOLS
MAJOR ▼ =
CRITICAL (C) =

GENERAL TOLERANCES: (UNLESS SPECIFIED)

	mm	INCH
4 PLACES	±0.	±.
3 PLACES	±0.	±.
2 PLACES	±0.	±.
1 PLACE	±0.	±.

ANGULAR: ± °

DRAFT WHERE APPLICABLE MUST REMAIN WITHIN DIMENSIONS

SCALE NONE
DESIGN UNITS ☒ mm ☐ INCH
THIRD ANGLE PROJECTION
DIMENSIONS: ☐ mm/INCH ☐ INCH/mm ☒ mm ONLY
SHT | REV
REVISE ON CAD ONLY

DRAWN BY & DATE: H.S.SHIN (910220)
CHECKED BY & DATE: J.K.OH
APPROVED BY & DATE: C.W.LEE

TITLE: TUBE PACKAGED FOR 53014 SERIES

MOLEX INCORPORATED KOREA

CAD FILENAME: SD-35303-001
MATERIAL NO.: SEE TABLE
DRAWING NO.: SD-35303-001
SHEET NO.: 1 OF 1

THIS DRAWING CONTAINS INFORMATION THAT IS PROPRIETARY TO MOLEX INCORPORATED AND SHOULD NOT BE USED WITHOUT WRITTEN PERMISSION.

SIZE A

MX-A4

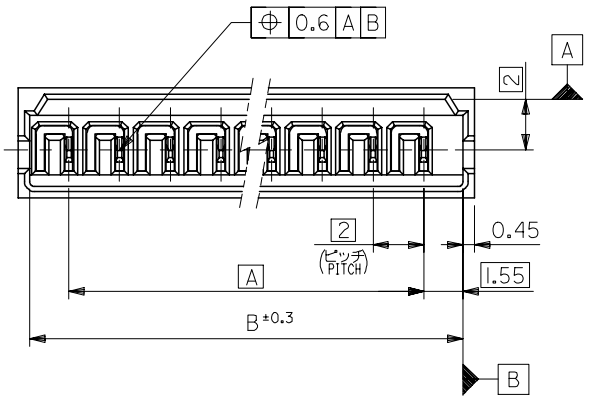

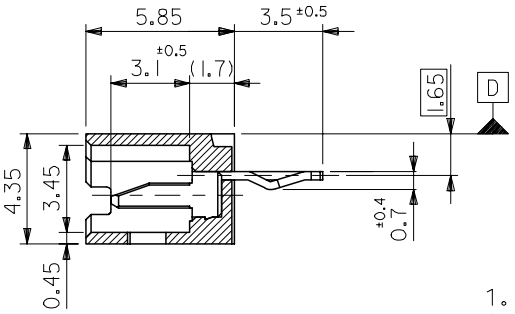

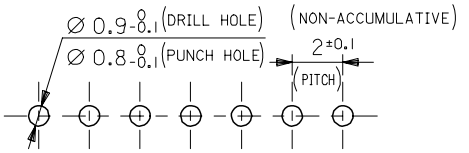

RECOMMENDED P.C.BOARD
HOLE DIMENSION (REFERENCE) t = 1.6

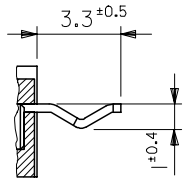

KINK FORM FOR 2 CKTS.
SOLDER TAIL KINK SHOULD BE ADDED ON BOTH TAILS.

NOTES

1. MATES WITH : 51004-**00
2. KINK TO BE ADDED ON THE ODD NUMBER SOLDER TAILS. (FROM THE TRADE MARK SIDE.)
3. * MARK INDICATES DYED COLOR : "0" NATURAL, "1" BLACK, "2" RED, "3" YELLOW, "4" BLUE
4. LOCKING HOLE : 1 PLACE FOR 2, 3 CKTS, 2 PLACES FOR 4 CKTS. AND MORE THAN 4 CKTS.

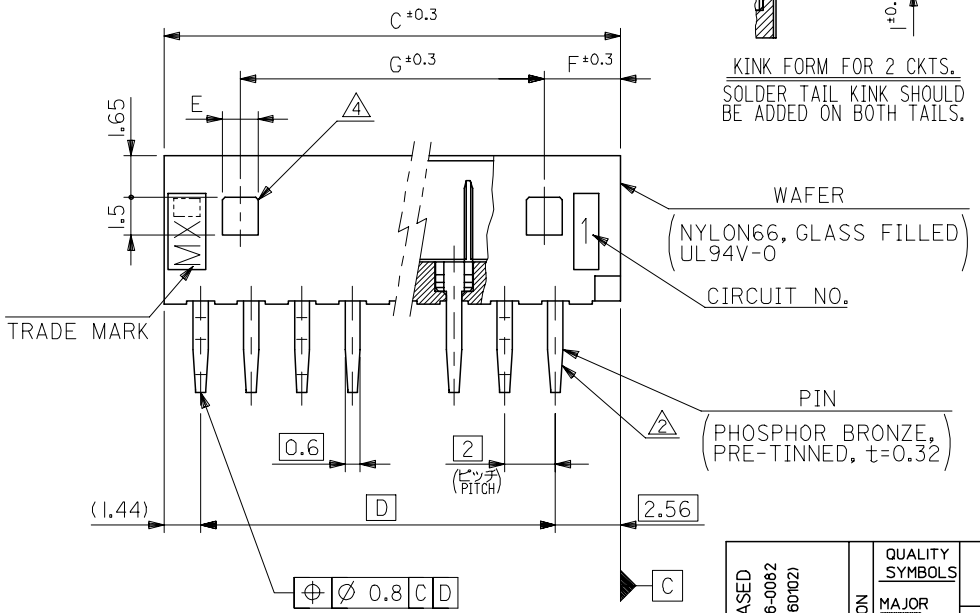

G	F	E	D	C	B	A	ENG. NO. 3 / APPLIED ITEM	ENG NO. 3	NO. OF CKTS.
26	3	1.4	28	32	31.1	28	53014-151*	35303-155*	15
24	3	1.4	26	30	29.1	26	-141*	35303-145*	14
22	3	1.4	24	28	27.1	24	-131*	35303-135*	13
20	3	1.4	22	26	25.1	22	-121*	35303-125*	12
18	3	1.4	20	24	23.1	20	-111*	35303-115*	11
16	3	1.4	18	22	21.1	18	-101*	35303-105*	10
14	3	1.4	16	20	19.1	16	-091*	35303-095*	9
12	3	1.4	14	18	17.1	14	-081*	35303-085*	8
10	3	1.4	12	16	15.1	12	-071*	35303-075*	7
8	3	1.4	10	14	13.1	10	-061*	35303-065*	6
6	3	1.4	8	12	11.1	8	-051*	35303-055*	5
4	3	1.4	6	10	9.1	6	-041*	35303-045*	4
//	4	3.4	4	8	7.1	4	-031*	35303-035*	3
//	3	1.4	2	6	5.1	2	53014-021*	35303-025*	2

ANGLE	±3°
30 OVER	±0.3
10 OVER 30 UNDER	±0.25
10 UNDER	±0.2
GENERAL TOLERANCES	

NEW RELEASED
ECN NO. KOR2006-0082
DRWN: K.S.KIM (060102)
CHK: Y.Soo.KIM
APPR: S.H.CHOI

DESCRIPTION | REV
A

QUALITY SYMBOLS
MAJOR
CRITICAL

GENERAL TOLERANCES: (UNLESS SPECIFIED)

	mm	INCH
4 PLACES	±0.	± -
3 PLACES	±0.	± -
2 PLACES	±0.	± -
1 PLACE	±0.	± -
ANGULAR: ±	°	

DRAFT WHERE APPLICABLE MUST REMAIN WITHIN DIMENSIONS

SCALE 5:1 | DESIGN UNITS ☐mm ☐INCH | THIRD ANGLE PROJECTION

DIMENSIONS: ☐mm INCH ☐INCH mm ☐mm ONLY | SHT | REV | REVISE ON CAD ONLY

DRAWN BY & DATE: K.S.KIM (060102)
CHECKED BY & DATE: Y.Soo.KIM
APPROVED BY & DATE: S.H.CHOI
CAD FILENAME

TITLE: 2.0 LOW PROFILE WAFER ASS'Y

MOLEX INCORPORATED

MATERIAL NO. | DRAWING NO. SD-35303-010 | SHEET NO. 1 OF 1

THIS DRAWING CONTAINS INFORMATION THAT IS PROPRIETARY TO MOLEX INCORPORATED AND SHOULD NOT BE USED WITHOUT WRITTEN PERMISSION.

SIZE B

KOREA | MX-A3

DO NOT SCALE DRAWING
DIMENSION IN METRIC

DWG. NO. | SIMILAR ITEM | PROJECT NO.