This document was generated on 04/28/2010

PLEASE CHECK WWW.MOLEX.COM FOR LATEST PART INFORMATION

Part Number: 0351550510
Status: Active
Description: 2.50mm (.098") Pitch Wire-to-Board Housing, Positive Lock, Natural, 5 Circuits

Documents:

3D Model
Drawing (PDF)
Product Specification PS-35155-003 (PDF)
RoHS Certificate of Compliance (PDF)

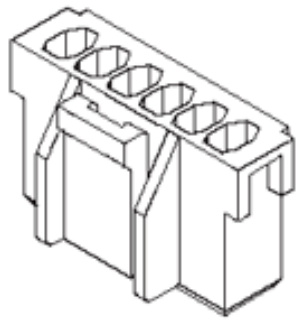

Series image - Reference only

Agency Certification

CSA	LR19980
TUV	R72081037
UL	E29179

General

Product Family	Crimp Housings
Series	35155
Product Name	N/A

Physical

Breakaway	No
Circuits (maximum)	5
Color - Resin	Natural
Flammability	94V-0
Gender	Female
Glow-Wire Compliant	No
Keying to Mating Part	None
Lock to Mating Part	Yes
Material - Resin	Polyester
Number of Rows	1
Packaging Type	Bag
Panel Mount	No
Pitch - Mating Interface (in)	0.098 In
Pitch - Mating Interface (mm)	2.50 mm
Polarized to Mating Part	Yes
Temperature Range - Operating	-40°C to +105°C

Material Info

Reference - Drawing Numbers

Product Specification	PS-35155-003
Sales Drawing	SD-35155-001

EU RoHS
ELV and RoHS Compliant
REACH SVHC
Contains SVHC: No
Halogen-Free Status
Not Halogen-Free

China RoHS

Need more information on product environmental compliance?

Email productcompliance@molex.com
For a multiple part number RoHS Certificate of Compliance, click here

Please visit the Contact Us section for any non-product compliance questions.

Search Parts in this Series
35155Series

Mates With
35312 Vertical Shrouded Header, 35184 Wire-to-Wire Plug Housing

Use With
5103 SPOX™ Crimp Terminal

This document was generated on 04/28/2010

PLEASE CHECK WWW.MOLEX.COM FOR LATEST PART INFORMATION

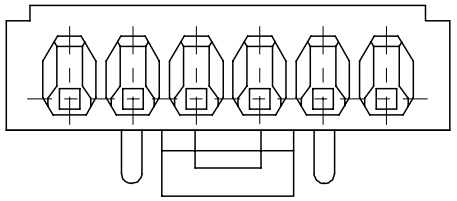

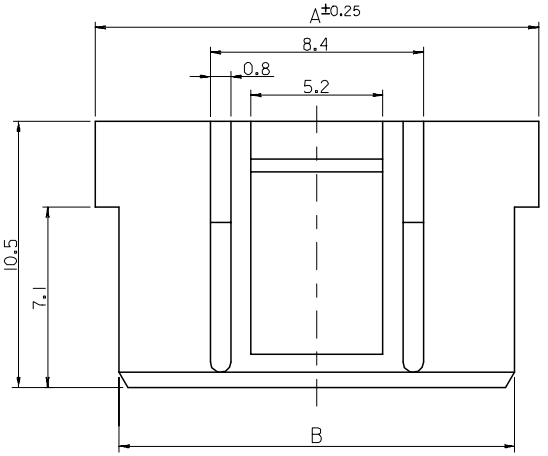

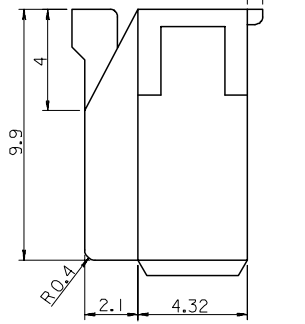

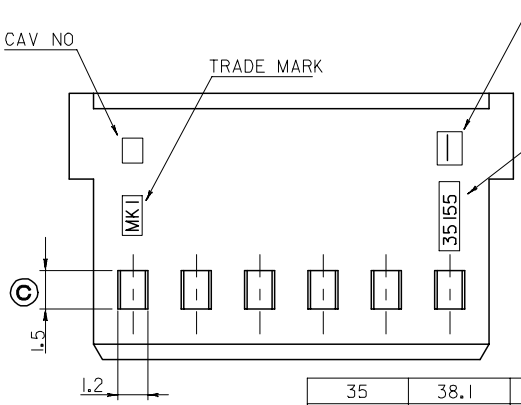

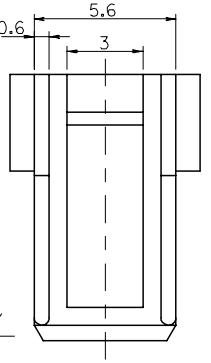

2,3 CKT ONLY

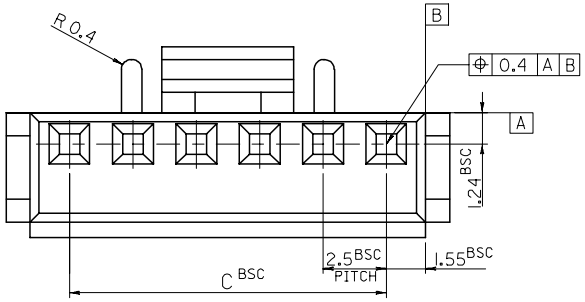

35	38.1	40	35155151*	35155-151*	15
32.5	35.6	37.5	141*	-141*	14
30	33.1	35	131*	-131*	13
27.5	30.6	32.5	121*	-121*	12
25	28.1	30	111*	-111*	11
22.5	25.6	27.5	101*	-101*	10
20	23.1	25	091*	-091*	9
17.5	20.6	22.5	081*	-081*	8
15	18.1	20	071*	-071*	7
12.5	15.6	17.5	061*	-061*	6
10	13.1	15	051*	-051*	5
7.5	10.6	12.5	041*	-041*	4
5	8.1	10	031*	-031*	3
2.5	5.6	7.5	35155021*	35155-021*	2
C	B	A	MATERIAL NO.	ENG NO.	CKT.

© LEGEND

35155 - ** 1 *

COLOR : 0 --- NATURAL
1 --- BLACK
2 --- RED
3 --- YELLOW
4 --- BLUE

CKT (02,03,04 ...)

NOTE

1. MATERIAL : PBT UL 94V-0
2. USED WITH TERMINAL : 5103-PBT9 ©
3. MATED WITH WAFER ASS'Y : 35312-****

Revised
ECN NO. KOR2006-0105
DRWN: J.H.Lee 0/03/22
CHK: YSooKim 05/12/12
APPR: S.H.Choi
DESCRIPTION
REV
D

QUALITY SYMBOLS
MAJOR
CRITICAL
C

GENERAL TOLERANCES: (UNLESS SPECIFIED)

	mm	INCH
4 PLACES	±0.	± -
3 PLACES	±0.	± -
2 PLACES	±0.	± -
1 PLACE	±0.1	± -
ANGULAR: ±	1 °	

DRAFT WHERE APPLICABLE MUST REMAIN WITHIN DIMENSIONS

SCALE 5-1
DESIGN UNITS ☒mm ☐INCH
THIRD ANGLE PROJECTION
DIMENSIONS: ☐mm/INCH ☐INCH/mm ☒mm ONLY
SHT REV
REVISE ON CAD ONLY

DRAWN BY & DATE K.S.Kim 04/08/10
CHECKED BY & DATE Y.Soo.Kim 04/08/26
APPROVED BY & DATE C.W.Lee 04/08/26

TITLE: 2.5 PITCH W/B CONN. HOUSING (WITH LOCK)

MOLEX INCORPORATED

CAD FILENAME SD-35155-001
MATERIAL NO. SEE TABLE
DRAWING NO. SD-35155-001
SHEET NO. 1/1

THIS DRAWING CONTAINS INFORMATION THAT IS PROPRIETARY TO MOLEX INCORPORATED AND SHOULD NOT BE USED WITHOUT WRITTEN PERMISSION.

SIZE B

KOREA MX-A3

DO NOT SCALE DRAWING
DIMENSION IN METRIC

PROJECT NO. | SIMILAR ITEM 35155-**0* | DWG. NO. SD-35155-001