3M™ Card-Edge

.100″ With Slotted Mounting Flanges 3000 Series

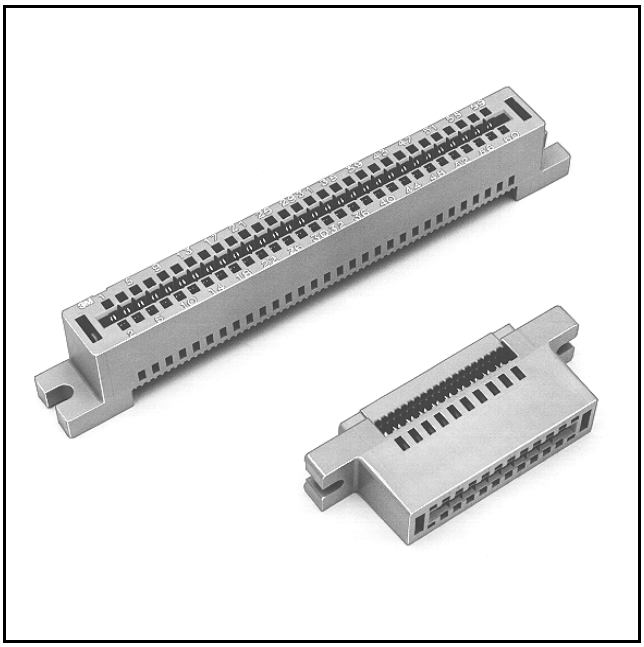

- Reinforced card-edge resists mouth bowing for consistent contact performance
- Standard slotted mounting flanges
- Metal cover clips provide superior cover retention
- Bifurcated contacts provide reliable contact with PC boards
- Keying plug 3439-2 provides polarization and/or keying
- RoHS* compliant

Date Modified: January 11, 2007

Physical

Insulation	
Material:	Glass Filled Polyester (PBT)
Flammability:	UL 94V-0
Color:	Gray
Contact	
Material:	Copper Alloy
Cover Clip	
Material:	Stainless Steel
Plating:	
Underplating and U-Slot:	100 μ″ [2.54 μm] Nickel
Wiping Area:	30 μ″ [0.76 μm] Gold
Wire Accommodation:	26 ang 28 AWG Solid and Stranded
Marking:	3M Logo and Part Identification Number, Position Identification

Electrical

Current Rating:	1 A
Insulation Resistance:	$> 1 \times 10^9 \Omega$ at 500 V_{DC}
Withstanding Voltage:	1000 Vrms at Sea Level

Environmental

Temperature Rating:	-55°C to +105°C

"RoHS compliant" means that the product or part does not contain any of the following substances in excess of the following maximum concentration values in any homogeneous material, unless the substance is in an application that is exempt under RoHS: (a) 0.1% (by weight) for lead, mercury, hexavalent chromium, polybrominated biphenyls or polybrominated diphenyl ethers; or (b) 0.01% (by weight) for cadmium. Unless otherwise stated by 3M in writing, this information represents 3M's knowledge and belief based upon information provided by third party suppliers to 3M.

UL File No.: E68080

3M is a trademark of 3M Company.

3M™ Pak 100 Card-Edge

.100″ With Slotted Mounting Flanges 3000 Series

Contact Quantity	3M Part Number	Dimensions				
		A	B	C	D	E
10	**3358**	0.96 [24.4]	0.85 [21.6]	0.612 [15.54]	1.30 [33.0]	1.50 [38.1]
16	**3368**	1.26 [32.0]	1.15 [29.2]	0.912 [23.16]	1.60 [40.6]	1.80 [45.7]
20	**3461**	1.46 [37.1]	1.35 [34.3]	1.112 [28.24]	1.80 [45.7]	2.00 [50.8]
26	**3462**	1.76 [44.7]	1.65 [41.9]	1.412 [35.86]	2.10 [53.3]	2.30 [58.4]
34	**3463**	2.16 [54.9]	2.05 [52.1]	1.812 [46.02]	2.50 [63.5]	2.70 [68.6]
40	**3464**	2.46 [62.5]	2.35 [59.7]	2.112 [53.64]	2.80 [71.1]	3.00 [76.2]
50	**3415**	2.96 [75.2]	2.85 [72.4]	2.612 [66.34]	3.30 [83.8]	3.50 [88.9]
60	**3666**	3.46 [87.9]	3.35 [85.1]	3.112 [79.04]	3.80 [96.5]	4.00 [101.6]
64	**3403**	3.66 [93.0]	3.55 [90.2]	3.312 [84.12]	4.00 [101.6]	4.20 [106.7]

Inch
[mm]

Tolerance Unless Noted			
	.0	.00	.000
inch	±.1	±.01	±.005

[ ] Dimensions for Reference Only

Connector Body

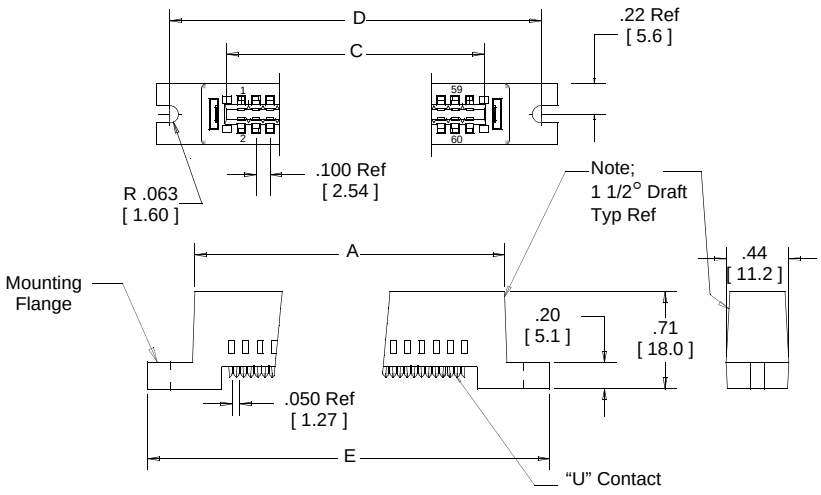

Assembled Height

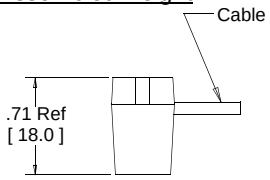

Optional **Keying Plug**
3M Part Number **3439-2**
(Order Separately)
Material-Glass Filled Polyester

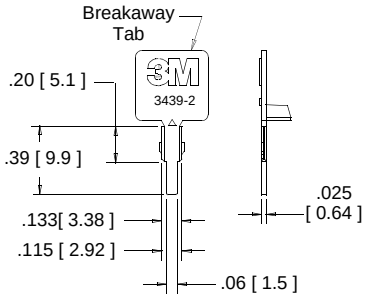

Connector Cover

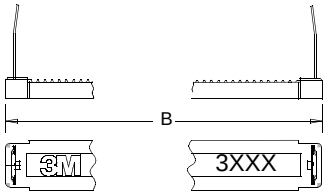

Note: 1. Optional Keying Plug to be ordered separately.

Ordering Information

XXXX-0002

3M Part Number:
See Table

Assembly tools: 3M™ 3640 press (or equivalent), 3M™ 3443-63 locator plate, 3M™ 3442-30 platen.

3M
Interconnect Solutions
http://www.3M.com/interconnects/

3M is a trademark of 3M Company.
For technical, sales or ordering information call
800-225-5373

Contact Quantity	3M Part Number	Dimension A ± .005	B (multiple ref.)
10	3358	0.595 [15.11]	4
16	3368	0.895 [22.73]	7
20	3461	1.095 [27.81]	9
26	3462	1.395 [35.43]	12
34	3463	1.795 [45.59]	16
40	3464	2.095 [53.21]	19
50	3415	2.595 [65.91]	24
60	3666	3.095 [78.61]	29
64	3403	3.295 [83.69]	31

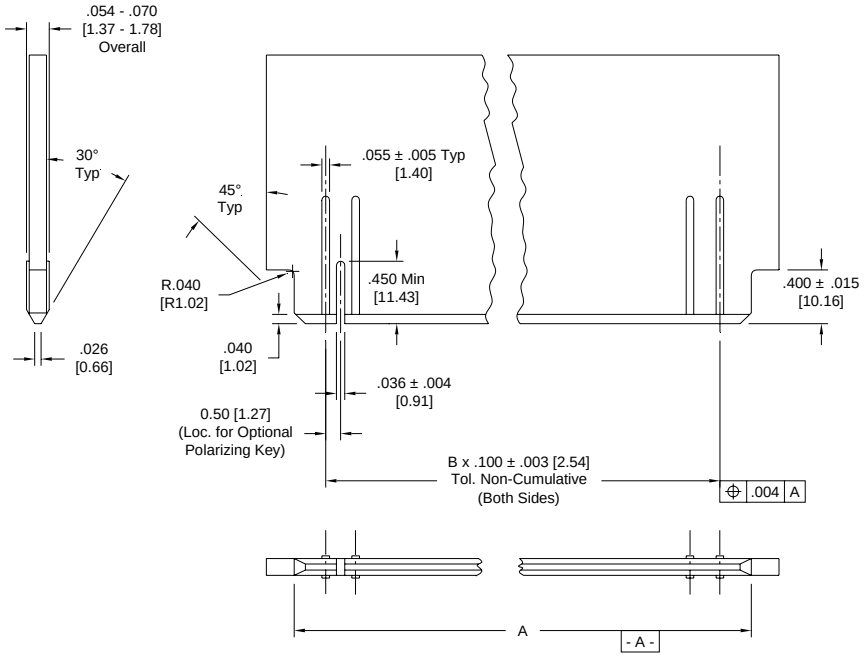

Recommended PCB Layout

3M

Interconnect Solutions

http://www.3M.com/interconnects/

3M is a trademark of 3M Company.

For technical, sales or ordering information call

800-225-5373

Important Notice

All statements, technical information, and recommendations related to 3M's products are based on information believed to be reliable, but the accuracy or completeness is not guaranteed. Before using this product, you must evaluate it and determine if it is suitable for your intended application. You assume all risks and liability associated with such use. Any statements related to the product which are not contained in 3M's current publications, or any contrary statements contained on your purchase order shall have no force or effect unless expressly agreed upon, in writing, by an authorized officer of 3M.

Warranty; Limited Remedy; Limited Liability.

This product will be free from defects in material and manufacture for a period of one (1) year from the time of purchase. **3M MAKES NO OTHER WARRANTIES INCLUDING, BUT NOT LIMITED TO, ANY IMPLIED WARRANTY OF MERCHANTABILITY OR FITNESS FOR A PARTICULAR PURPOSE.** If this product is defective within the warranty period stated above, your exclusive remedy shall be, at 3M's option, to replace or repair the 3M product or refund the purchase price of the 3M product. **Except where prohibited by law, 3M will not be liable for any indirect, special, incidental or consequential loss or damage arising from this 3M product, regardless of the legal theory asserted.**

3M

3M Electronics

6801 River Place Blvd.
Austin, TX 78726-9000
800/225-5373
www.3M.com/electronics

Minimum 10%
Post-Consumer Fiber

Printed in USA.

© 3M 2007