3422

LINEAR INTEGRATED CIRCUIT

HIGH PERFORMANCE DUAL BIPOLAR OPERATINAL AMPLIFIER

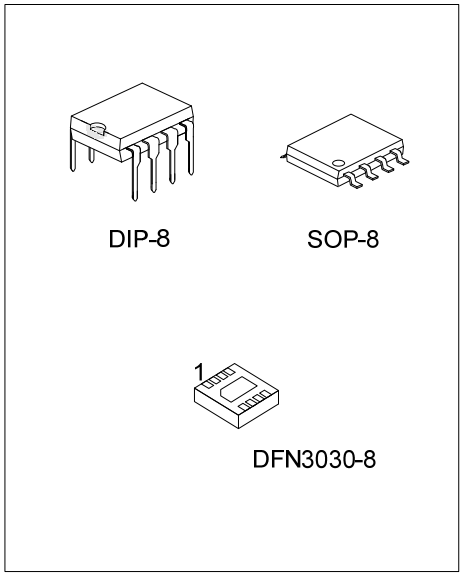

■ DESCRIPTION

The UTC **3422** is a dual high performances operational amplifier featuring speed of 25MHz and single supply operation from 3V ~ 36V.

The UTC **3422** is therefore an enhanced replacement of standard dual operational amplifiers.

■ FEATURES

* Single Supply Operation: 3V ~ 36V
* Dual Supply Operation: ±1.5V ~ ±18V
* High Gain Bandwidth Product: 25MHz
* High Slew Rate: 15V/μs
* Low Voltage Noise: 14nV/$\sqrt{Hz}$
* No Phase Inversion
* ESD Tolerance: 2KV
* Latch-Up Immunity

■ ORDERING INFORMATION

Ordering Number		Package	Packing
Lead Free	Halogen Free		
3422L-D08-T	3422G-D08-T	DIP-8	Tube
3422L-S08-R	3422G-S08-R	SOP-8	Tape Reel
3422L-K08-3030-R	3422G-K08-3030-R	DFN3030-8	Tape Reel

3422G-D08-T (1)Packing Type	(1) R: Tape Reel, T: Tube
(2)Package Type	(2) D08: DIP-8, S08: SOP-8, K08-3030: DFN3030-8
(3)Green Package	(3) G: Halogen Free and Lead Free, L: Lead Free

Copyright © 2018 Unisonic Technologies Co., Ltd

■ MARKING

PACKAGE	MARKING
DIP-8	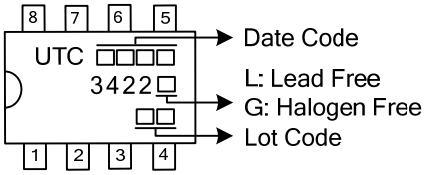
SOP-8	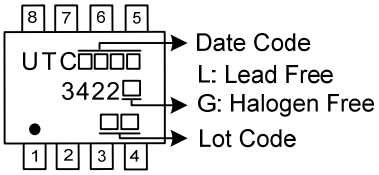
DFN3030-8	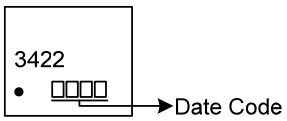

■ PIN CONFIGURATION

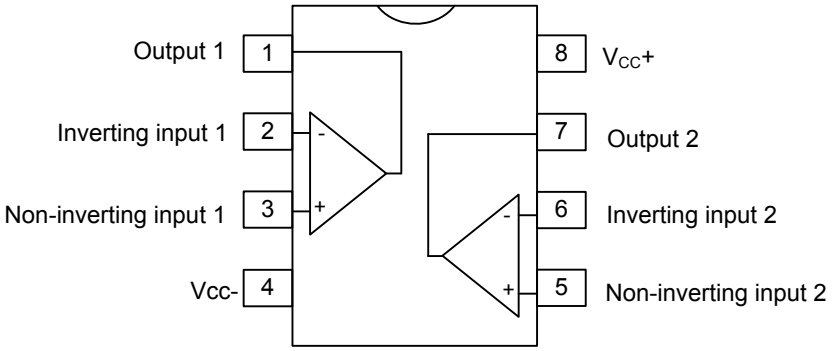

DIP-8 / SOP-8

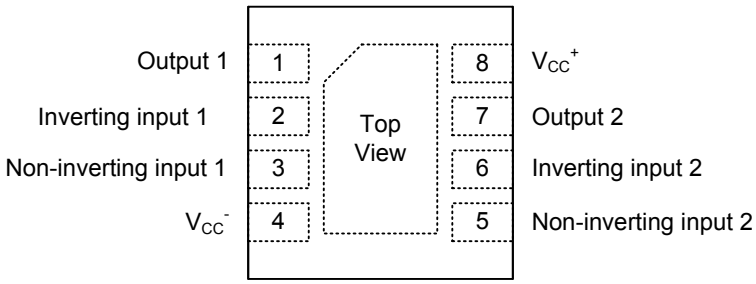

DFN3030-8

■ BLOCK DIAGRAM (1/2 Shown)

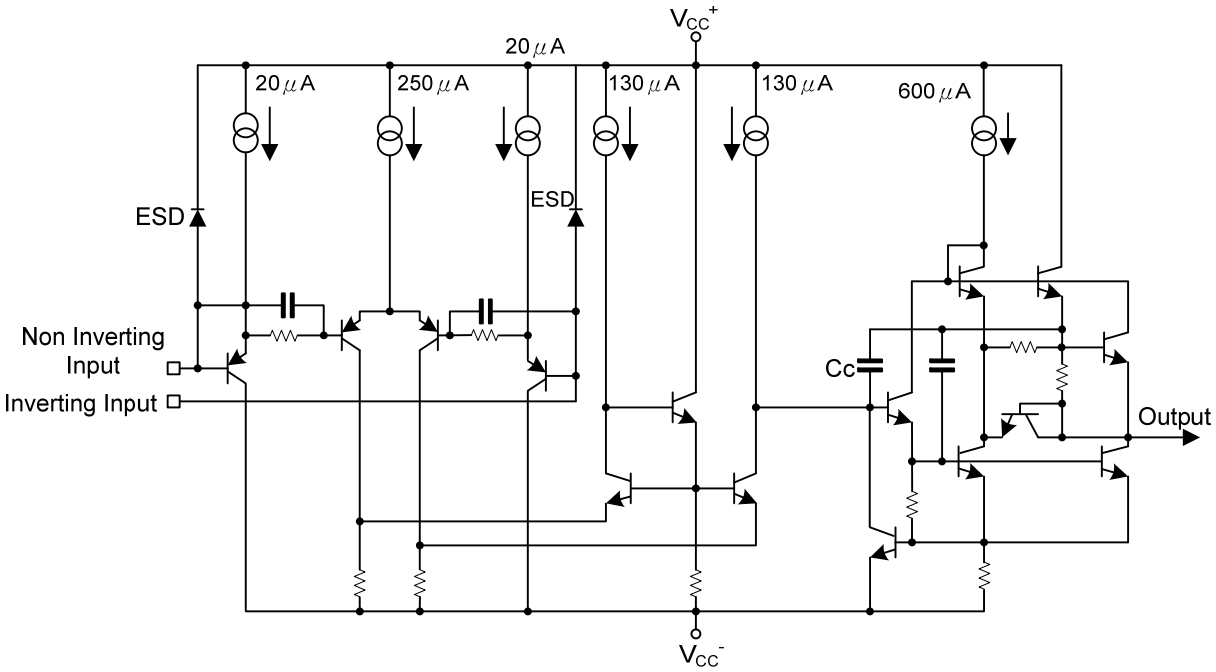

■ ABSOLUTE MAXIMUM RATINGS

PARAMETER		SYMBOL	RATINGS	UNIT
Supply Voltage		V_{CC}	±18 ~ 36	V
Differential Input Voltage (Note 1)		V_{ID}	±36	V
Input Voltage (Note 1)		V_{IN}	±18	V
Output Short-Circuit Duration (Note 2)			Infinite	
Maximum Power Dissipation (Note 2)	DIP-8/SOP-8	P_D	500	mW
	DFN3030-8		890	mW
Junction Temperature		T_J	+150	°C
Operating Temperature		T_{OPR}	-40 ~ +125	°C
Storage Temperature		T_{STG}	-65 ~ +150	°C

Notes: 1. Either or both input voltages must not exceed the magnitude of V_{CC}^+ or V_{CC}^-
2. Power dissipation must be considered to ensure maximum junction temperature (T_J) is not exceeded

■ OPERATING CONDITIONS

PARAMETER	SYMBOL	RATINGS	UNIT
Supply Voltage	V_{CC}	3 ~ 36	V

■ ELECTRICAL CHARACTERISTICS (V_{CC}+=15V, V_{CC}-=-15V, T_A=25°C, unless otherwise specified)

PARAMETER	SYMBOL	TEST CONDITIONS			MIN	TYP	MAX	UNIT
Input Offset Voltage	V_{IO}	V_{IC}=0V, V_O=0V	V_{CC}^+=+15V, V_{CC}^-=-15V				2.5	mV
			T_{MIN}≤T_A≤T_{MAX}				3.5	
			V_{CC}^+=+5V, V_{CC}^-=0V				2.5	
Input Offset Voltage Drift	△V_{IO}	V_{IC}=0V, V_O=0V				2		μV/℃
Input Offset Current	I_{IO}	V_{IC}=0V, V_O=0V				3	65	nA
Input Bias Current	I_{IB}	V_{IC}=0V, V_O=0V				100	650	nA
Common Mode Input Voltage	V_{ICM}					V_{CC}^- to V_{CC}^+-1.8		V
Large Signal Voltage Gain	A_{VD}	R_L=2kΩ, V_O=0V ~ +10V T_{MIN}≤T_A≤T_{MAX}			32 20	100		V/mV
Output Voltage Swing	±V_{OPP}	V_{ID}=±1V	V_{CC}^+=+15V, V_{CC}^-=-15V, R_L=2kΩ	V_{OH}	13.4	13.9		V
				V_{OL}		-13.9	-13.5	
			R_L=10kΩ	V_{OH}	13.4	14		
				V_{OL}		-14.7	-14.1	
			V_{CC}^+=+5V, V_{CC}^-=0V, R_L=2kΩ	V_{OH}	3.7			
				V_{OL}		0.15	0.2	
Output Short Circuit Current	I_O	V_{ID}=±1V, V_O=0V,		Source	25	37		mA
				Sink	25	37		
Common Mode Rejection Ratio	CMR	V_{ic}=-15V ~ +13.2V			80	100		dB
Supply Voltage Rejection Ratio	SVR	V_{CC}^+/ V_{CC}^-=+15V/-15V ~ +5V/-5V			90	105		dB
Supply Current	I_{CC}	V_O=0V,no load, each amplifier	V_{CC}^+=+15V, V_{CC}^-=-15V				2.75	mA
			T_{MIN}≤T_A≤T_{MAX}			2.15	3	
			V_{CC}^+=+5V,V_{CC}^-=0V				2.75	
Slew Rate	SR	V_I =-10V~10V,C_L=100pF,R_L=2kΩ, A_V=+1			8	15		V/μs
Gain Bandwith Product	GBP	f=100kHz, R_L=2kΩ, C_L=100pF			17	25		MHz
Unity Gain Bandwith	B	Open loop				5		MHz
Phase Margin	m	R_L=2kΩ				50		Degrees
		R_L=2kΩ, C_L=100pF				40		
Equivalent Input Noise Voltage	e_N	R_S=100Ω, f=1kHz				14		$\frac{nV}{\sqrt{Hz}}$
Channel Separation	V_{O1}/V_{O2}	f=20Hz ~ 20kHz				120		dB
Total Harmonic Distortion	THD	V_{CC}=±15V, f=1kHz, A_{VCL}=20dB, R_L=600Ω, V_O=3Vrms				0.003		%

■ APPLICATIONS INFORMATION

UTC 3422 IN COMPARATOR APPLICATION

The UTC **3422** is a dual bipolar operational amplifier offering a single supply operation from 3V ~ 36V with very good performances: medium speed (25MHz), unity gain stability and low noise.

Most of operational amplifiers are not suited for comparator use because of low transition speed, output signal incompatible with standard logics level and mainly, phase inversion. The phase inversion occures when a strong differential signal is applied to the device inputs. The output level is then inverted and shows a wrong logic state. The UTC **3422** does not present this problematic behaviour.

Figure 1 shows basic comparator application. Figure 2 shows the curves of the device response in standard comparator configuration without external components.

Transition speed : Typical transition speed under a single 5V supply voltage is about 2µs from 50mV overdrive. $V_{OH(MIN)}$. is 3.7V and $V_{OL(MAX)}$. is 0.2V (2kΩ load) making it compatible with standard logic families.

Figure 3 shows output signal transition for a 50mV input signal overdrive respectively of 3µs.

Figure 4 shows output signal transition for a 250mV input signal overdrive respectively of 1µs.

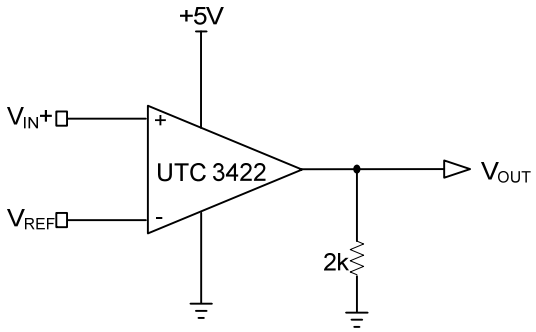

Figure.1 Basic Comparator Application

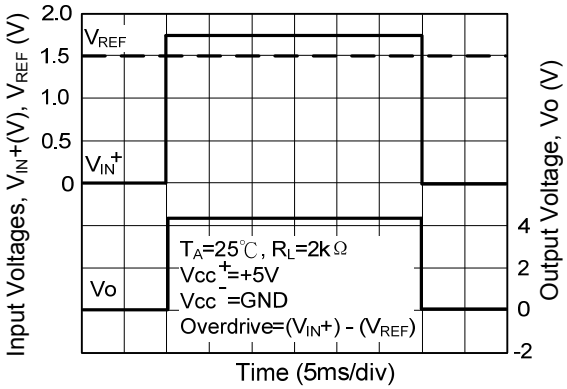

Figure.2 Operating Conditions

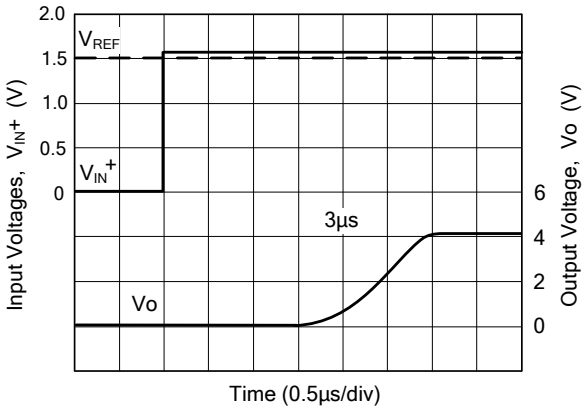

Figure.3 Transition Speed @ 50mV Overdrive

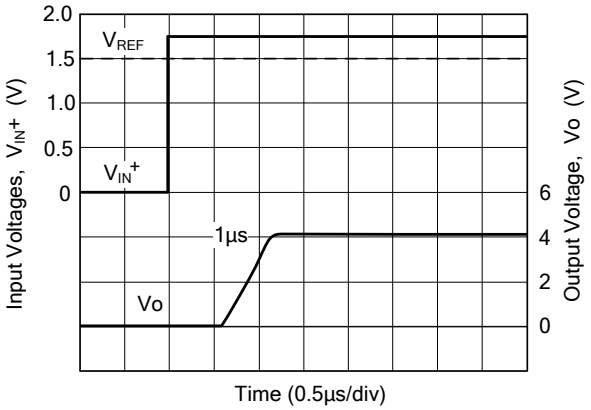

Figure.4 Transition Speed @ 250mV Overdrive

■ APPLICATIONS INFORMATION(Cont.)

PHASE INVERSION

The UTC **3422** keeps the right output level thanks to its specific input structures at high differential input voltage. The advantage is obvious on the following figures and can be also an advantage in linear use when saturation might occure.

Figure 5 shows the behaviour in follower stage with saturation output of UTC **3422**.

Figure 6 shows the saturation behaviour with 15MHz standard operational amplifier.

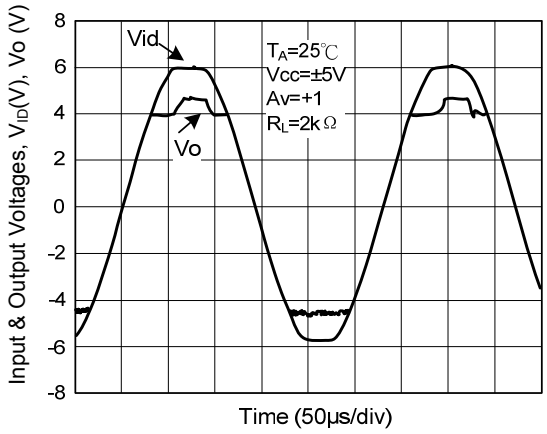

Figure.5 Behaviour With UTC3422

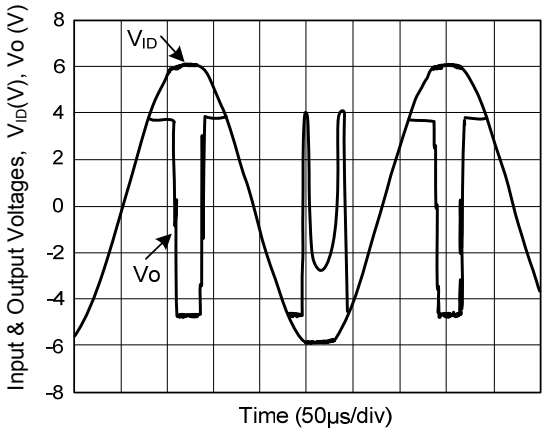

Figure.6 Saturation Behaviour With 15MHz Standard Operational Amplifier

UTC assumes no responsibility for equipment failures that result from using products at values that exceed, even momentarily, rated values (such as maximum ratings, operating condition ranges, or other parameters) listed in products specifications of any and all UTC products described or contained herein. UTC products are not designed for use in life support appliances, devices or systems where malfunction of these products can be reasonably expected to result in personal injury. Reproduction in whole or in part is prohibited without the prior written consent of the copyright owner. UTC reserves the right to make changes to information published in this document, including without limitation specifications and product descriptions, at any time and without notice. This document supersedes and replaces all information supplied prior to the publication hereof.