Document Number: MC33879
Rev 6.0, 6/2007

Configurable Octal Serial Switch with Open Load Detect Current Disable

33879
33879A

HIGH SIDE/ LOW SIDE SWITCH

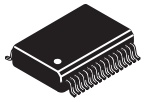

DWB SUFFIX EXPOSED PAD
EK SUFFIX (PB-FREE)
98ARL10543D
32-PIN SOICW

The 33879 device is an 8-output hardware-configurable, high-side/ low-side switch with 16-bit serial input control. Two of the outputs may be controlled directly via microprocessor for PWM applications. The 33879 incorporates SMARTMOS technology, with CMOS logic, bipolar/MOS analog circuitry, and DMOS power MOSFETs. The 33879 controls various inductive, incandescent, or LED loads by directly interfacing with a microcontroller. The circuit's innovative monitoring and protection features include very low standby currents, cascade fault reporting, internal +45 V clamp voltage for low-side configuration, -20 V high-side configuration, output-specific diagnostics, and independent overtemperature protection.

Features

- Designed to Operate 5.5 V ≤ V_{PWR} ≤ 26.5 V
- 16-Bit SPI for Control and Fault Reporting, 3.3 V/5.0 V Compatible
- Outputs Are Current Limited (0.6 A to 1.2 A) to Drive Incandescent Lamps
- Output Voltage Clamp, +45 V (Low Side) and -20 V (High Side) During Inductive Switching
- On/Off Control of Open Load Detect Current (LED Application)
- Internal Reverse Battery Protection on V_{PWR}
- Loss of Ground or Supply Will Not Energize Loads or Damage IC
- Maximum 5.0 μA I_{PWR} Standby Current at 13 V V_{PWR}
- $R_{DS(ON)}$ of 0.75 Ω at 25°C Typical
- Short Circuit Detect and Current Limit with Automatic Retry
- Independent Overtemperature Protection
- Pb-Free Packaging Designated by Suffix Code EK

ORDERING INFORMATION

Device	Temperature Range (T_A)	Package
MC33879EK/R2	-40°C to 125°C	32 SOICW-EP
MCZ33879EK/R2		
MCZ33879AEK/R2		

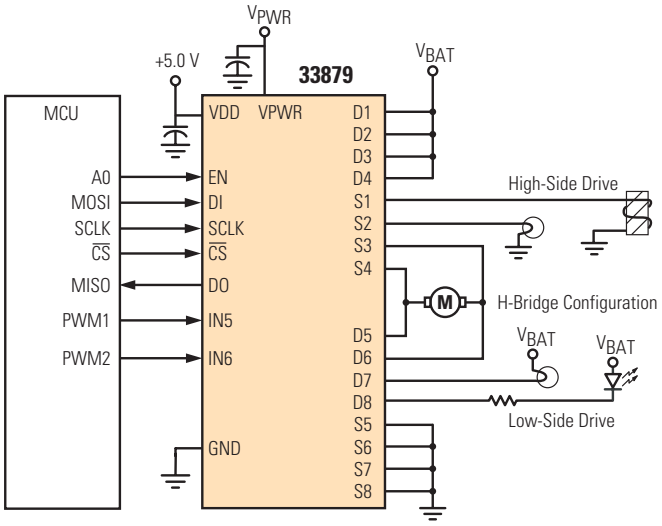

Figure 1. 33879 Simplified Application Diagram

* This document contains certain information on a new product.
Specifications and information herein are subject to change without notice.

© Freescale Semiconductor, Inc., 2007. All rights reserved.

DEVICE VARIATIONS

Table 1. Device Variations *(Optional Table)*

Freescale Part No.	V_{PWR} Supply Voltage	Reference Location
33879	-16 to 40V	6, 7, 13
33879A	-16 to 45V	

INTERNAL BLOCK DIAGRAM

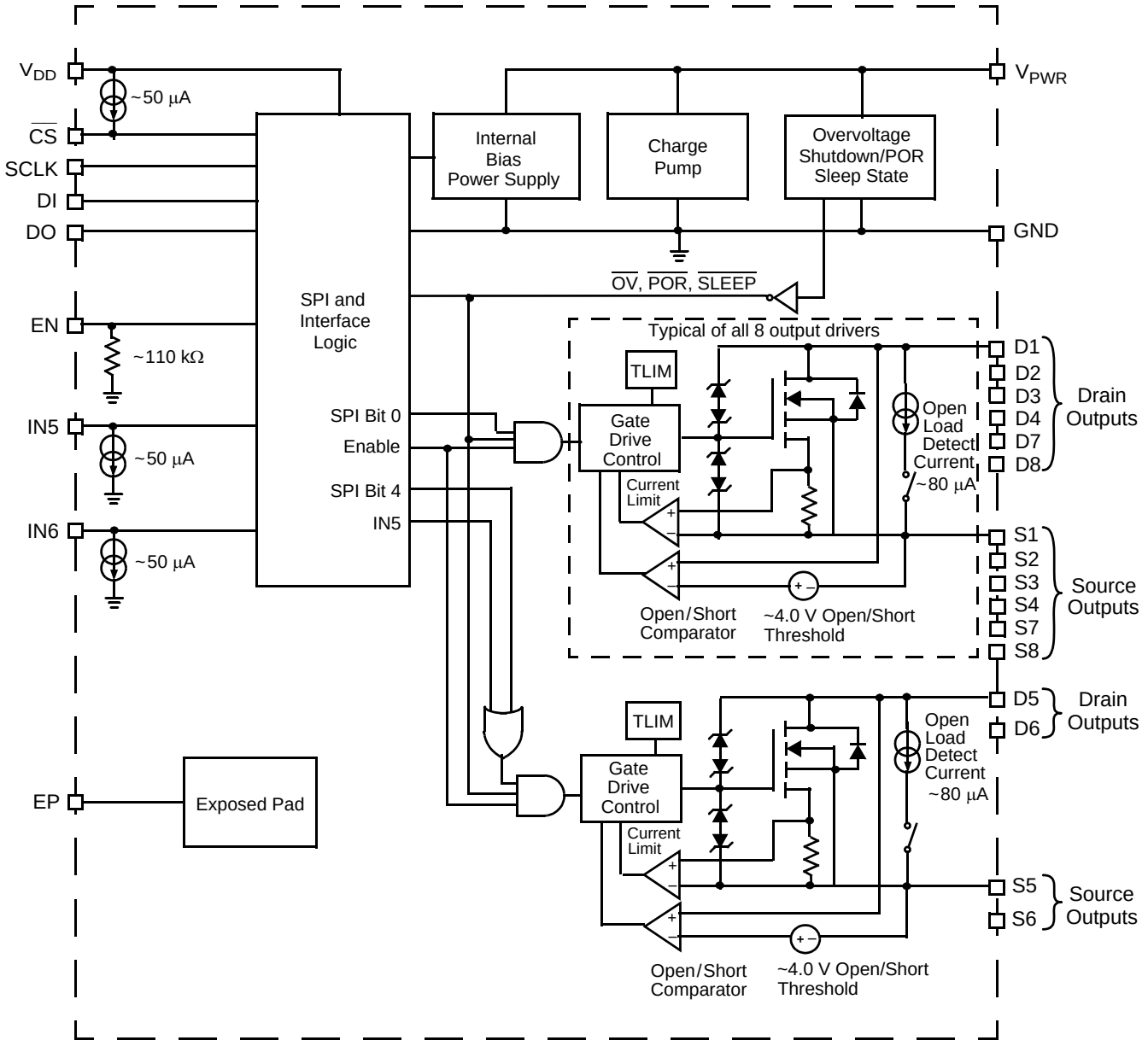

Figure 2. 33879 Simplified Internal Block Diagram

PIN CONNECTIONS

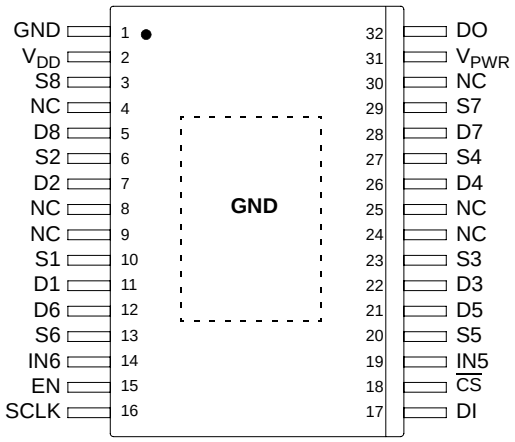

Figure 3. 33879 Pin Connections

Table 2. 33879 Pin Definitions

A functional description of each pin can be found in the Functional Pin Description section beginning on page 15.

Pin Number	Pin Name	Pin Function	Formal Name	Definition
1	GND	Ground	Ground	Digital ground.
2	V_{DD}	Input	Logic Supply Voltage	Logic supply for SPI interface. With V_{DD} low the device will be in Sleep mode.
3	S8	Output	Source Output 8	Output 8 MOSFET source pin.
4, 8, 9, 24, 25, 30	NC	No Connection	Not Connected	No internal connection to this pin.
5	D8	Output	Drain Output 8	Output 8 MOSFET drain pin.
6	S2	Output	Source Output 2	Output 2 MOSFET source pin.
7	D2	Output	Drain Output 2	Output 2 MOSFET drain pin.
10	S1	Output	Source Output 1	Output 1 MOSFET source pin.
11	D1	Output	Drain Output 1	Output 1 MOSFET drain pin.
12	D6	Output	Drain Output 6	Output 6 MOSFET drain pin.
13	S6	Output	Source Output 6	Output 6 MOSFET source pin.
14	IN6	Input	Command Input 6	PWM direct control input pin for output 6. IN6 is “OR” with SPI bit.
15	EN	Input	Enable Input	IC Enable. Active high. With EN low, the device is in Sleep mode.
16	SCLK	Clock	SPI Clock	SPI control clock input pin.
17	DI	Input	Serial Data Input	SPI control data input pin from MCU to the 33879. Logic [1] activates output.
18	$\overline{CS}$	Input	SPI Chip Select	SPI control chip select input pin from MCU to the 33879. Logic [0] allows data to be transferred in.
19	IN5	Input	Command Input 5	PWM direct control input pin for output 5. IN5 is “OR” with SPI bit.
20	S5	Output	Source Output 5	Output 5 MOSFET source pin.
21	D5	Output	Drain Output 5	Output 5 MOSFET drain pin.
22	D3	Output	Drain Output 3	Output 3 MOSFET drain pin.

Table 2. 33879 Pin Definitions (continued)

A functional description of each pin can be found in the Functional Pin Description section beginning on page 15.

Pin Number	Pin Name	Pin Function	Formal Name	Definition
23	S3	Output	Source Output 3	Output 3 MOSFET source pin.
26	D4	Output	Drain Output 4	Output 4 MOSFET drain pin.
27	S4	Output	Source Output 4	Output 4 MOSFET source pin.
28	D7	Output	Drain Output 7	Output 7 MOSFET drain pin.
29	S7	Output	Source Output 7	Output 7 MOSFET source pin.
31	V_{PWR}	Input	Battery Input	Power supply pin to the 33879. V_{PWR} has internal reverse battery protection.
32	DO	Output	Serial Data Output	SPI control data output pin from the 33879 to the MCU. DO=0 no fault, DO=1 specific output has fault.
33	EP	Ground	Exposed Pad	Device will perform as specified with the Exposed Pad un-terminated (floating) however, it is recommended that the Exposed Pad be terminated to pin 1 (GND) and system ground.

ELECTRICAL CHARACTERISTICS

MAXIMUM RATINGS

Table 3. 33879 Maximum Ratings

All voltages are with respect to ground unless otherwise noted. Exceeding these ratings may cause a malfunction or permanent damage to the device.

Ratings	Symbol	Value	Unit
ELECTRICAL RATINGS			
V_{DD} Supply Voltage (1)	V_{DD}	-0.3 to 7.0	V_{DC}
$\overline{CS}$, DI, DO, SCLK, IN5, IN6, and EN (1)	–	-0.3 to 7.0	V_{DC}
V_{PWR} Supply Voltage (1) 33879 33879A	V_{PWR}	 -16 to 40 -16 to 45	V_{DC}
Output Clamp Energy (2)	E_{CLAMP}	50	mJ
ESD Voltage (3)			V
Human Body Model 33879	V_{ESD1}	±450	
Machine Model 33879	V_{ESD2}	±100	
Human Body Model 33879A	V_{ESD1}	±2000	
Machine Model 33879A	V_{ESD2}	±200	
THERMAL RATINGS			
Operating Temperature			°C
Ambient	T_A	-40 to 125	
Junction	T_J	-40 to 150	
Case	T_C	-40 to 125	
Storage Temperature	T_{STG}	-55 to 150	°C
Power Dissipation (4)	P_D	1.7	W
Thermal Resistance			°C/W
Junction to Ambient	$R_{\theta JA}$	71	
Between the Die and the Exposed Die Pad	$R_{\theta JC}$	1.2	
Peak Package Reflow Temperature During Reflow (5), (6)	T_{PPRT}	Note 6	°C

Notes

1. Exceeding these limits may cause malfunction or permanent damage to the device.
2. Maximum output clamp energy capability at 150°C junction temperature using single non-repetitive pulse method with I = 350 mA.
3. ESD1 testing is performed in accordance with the Human Body Model (C_{ZAP} = 100 pF, R_{ZAP} = 1500 Ω), ESD2 testing is performed in accordance with the Machine Model (C_{ZAP} = 200 pF, R_{ZAP} = 0 Ω).
4. Maximum power dissipation at T_A = 25°C with no heatsink used.
5. Pin soldering temperature limit is for 10 seconds maximum duration. Not designed for immersion soldering. Exceeding these limits may cause malfunction or permanent damage to the device.
6. Freescale's Package Reflow capability meets Pb-free requirements for JEDEC standard J-STD-020C. For Peak Package Reflow Temperature and Moisture Sensitivity Levels (MSL), Go to www.freescale.com, search by part number [e.g. remove prefixes/suffixes and enter the core ID to view all orderable parts. (i.e. MC33xxxD enter 33xxx), and review parametrics.

STATIC ELECTRICAL CHARACTERISTICS

Table 4. Static Electrical Characteristics

Characteristics noted under conditions 3.1 V ≤ V_{DD} ≤ 5.5 V, 5.5 V ≤ V_{PWR} ≤ 18 V, -40°C ≤ T_C ≤ 125°C unless otherwise noted. Where applicable, typical values reflect the parameter's approximate average value with V_{PWR} = 13 V, T_A = 25°C.

Characteristic	Symbol	Min	Typ	Max	Unit
POWER INPUT					
Supply Voltage Range Fully Operational 33879 33879A	$V_{PWR(FO)}$	 5.5 5.5	 – –	 26.5 27.5	V
Supply Current	$I_{PWR(ON)}$	–	14	24	mA
Sleep State Supply Current V_{DD} or EN ≤ 0.8 V, V_{PWR} = 13 V	$I_{PWR(SS)}$	–	2.0	5.0	µA
Sleep State Supply Current EN ≤ 0.8 V, V_{DD} = 5.5 V	$I_{VDD(SS)}$	–	2.0	5.0	µA
V_{PWR} Overvoltage Shutdown Threshold Voltage 33879 33879A	$V_{PWR(OV)}$	 27 28	 28.5 30	 32 33	V
V_{PWR} Overvoltage Shutdown Hysteresis Voltage	$V_{PWR(OV-HYS)}$	0.2	1.5	2.5	V
V_{PWR} Undervoltage Shutdown Threshold Voltage	$V_{PWR(UV)}$	3.0	4.0	5.0	V
V_{PWR} Undervoltage Shutdown Hysteresis Voltage	$V_{PWR(UV-HYS)}$	300	500	700	mV
Logic Supply Voltage	V_{DD}	3.1	–	5.5	V
Logic Supply Current	I_{DD}	250	400	700	µA
Logic Supply Sleep State Threshold Voltage	$V_{DD(SS)}$	0.8	2.5	3.0	V

Table 4. Static Electrical Characteristics (continued)

Characteristics noted under conditions 3.1 V ≤ V_{DD} ≤ 5.5 V, 5.5 V ≤ V_{PWR} ≤ 18 V, -40°C ≤ T_C ≤ 125°C unless otherwise noted. Where applicable, typical values reflect the parameter's approximate average value with V_{PWR} = 13 V, T_A = 25°C.

Characteristic	Symbol	Min	Typ	Max	Unit
POWER OUTPUT					
Drain-to-Source ON Resistance (I_{OUT} = 0.350 A, V_{PWR} = 13 V) T_J = 125°C T_J = 25°C T_J = -40°C	$R_{DS(ON)}$	 – – –	 – 0.75 –	 1.4 – –	Ω
Output Self Limiting Current High-Side and Low-Side Configurations	$I_{OUT(LIM)}$	0.6	–	1.2	A
Output Fault Detection Voltage Threshold [7] Outputs Programmed OFF	$V_{OUT(FLT-TH)}$	 2.5	 4.0	 4.5	V
Output Fault Detection Current @ Threshold, High-Side Configuration Outputs Programmed OFF	$I_{OUT(FLT-TH)}$	 35	 55	 90	µA
Output Fault Detection Current @ Threshold, Low-Side Configuration Outputs Programmed OFF	$I_{OUT(FLT-TH)}$	 20	 30	 60	µA
Output OFF Open Load Detection Current, High-Side Configuration V_{DRAIN} = 16 V, V_{SOURCE} = 0 V, Outputs Programmed OFF, VPWR=16V	I_{OCO}	65	100	160	µA
Output OFF Open Load Detection Current, Low-Side Configuration V_{DRAIN} = 16 V, V_{SOURCE} = 0 V, Outputs Programmed OFF, VPWR=16V	I_{OCO}	40	75	135	µA
Output Clamp Voltage Low-Side Drive I_D = 10 mA	$V_{OC(LSD)}$	 40	 45	 55	V
Output Clamp Voltage High-Side Drive I_S = -10 mA	$V_{OC(HSD)}$	 -15	 -20	 -25	V
Output Leakage Current High-Side and Low-Side Configurations V_{DD} = 0 V, V_{DRAIN} = 16 V, V_{SOURCE} = 0 V	$I_{OUT(LKG)}$	 –	 –	 5.0	µA
Output Leakage Current Low-Side Configuration V_{DD} = 5.0 V, V_{DRAIN} = 16 V, V_{SOURCE} = 0 V, Open Load Detection Current Disabled	$I_{OUT(LKG)}$	 –	 –	 5.0	µA
Output Leakage Current High-Side Configuration V_{DD} = 5.0 V, V_{DRAIN} = 16 V, V_{SOURCE} = 0 V, Open Load Detection Current Disabled	$I_{OUT(LKG)}$	 –	 –	 20	µA
Overtemperature Shutdown [8]	T_{LIM}	155	–	185	°C
Overtemperature Shutdown Hysteresis [8]	$T_{LIM(HYS)}$	5.0	10	15	°C

Notes
7. Output fault detection thresholds with outputs programmed OFF. Output fault detect thresholds are the same for output open and shorts.
8. This parameter is guaranteed by design; however, it is not production tested.

Table 4. Static Electrical Characteristics (continued)

Characteristics noted under conditions 3.1 V ≤ V_{DD} ≤ 5.5 V, 5.5 V ≤ V_{PWR} ≤ 18 V, -40°C ≤ T_C ≤ 125°C unless otherwise noted. Where applicable, typical values reflect the parameter's approximate average value with V_{PWR} = 13 V, T_A = 25°C.

Characteristic	Symbol	Min	Typ	Max	Unit
DIGITAL INTERFACE					
Input Logic High-Voltage Thresholds [9]	V_{IH}	0.7 V_{DD}	–	V_{DD} + 0.3	V
Input Logic Low-Voltage Thresholds [9]	V_{IL}	GND - 0.3	–	0.2 V_{DD}	V
IN5, IN6, EN Input Logic Current IN5, IN6, EN = 0 V	I_{IN5}, I_{IN6}, I_{EN}	-10	–	10	µA
IN5, IN6 Pulldown Current 0.8 V to 5.0 V	I_{IN5}, I_{IN6},	30	45	100	µA
EN Pulldown Current EN = 5.0 V	I_{EN}	20	45	100	µA
SCLK, DI Input, Tri-State DO Output 0 V to 5.0 V	I_{SCK}, I_{DI}, I_{TRI-DO}	-10	–	10	µA
$\overline{CS}$ Input Current $\overline{CS}$ = V_{DD}	$I_{\overline{CS}}$	-10	–	10	µA
$\overline{CS}$ Pullup Current $\overline{CS}$ = 0 V	$I_{\overline{CS}}$	-30	–	-100	µA
$\overline{CS}$ Leakage Current to V_{DD} $\overline{CS}$ = 5.0 V, V_{DD} = 0 V	$I_{\overline{CS}(LKG)}$	–	–	10	µA
DO High-State Output Voltage $I_{DO-HIGH}$ = -1.6 mA	V_{DOHIGH}	V_{DD} - 0.4	–	V_{DD}	V
DO Low-State Output Voltage I_{DO-LOW} = 1.6 mA	V_{DOLOW}	–	–	0.4	V
Input Capacitance on SCLK, DI, Tri-State DO, IN5, IN6, EN [10]	C_{IN}	–	–	20	pF

Notes

9. Upper and lower logic threshold voltage levels apply to DI, $\overline{CS}$, SCLK, IN5, IN6, and EN.
10. This parameter is guaranteed by design; however, it is not production tested.

DYNAMIC ELECTRICAL CHARACTERISTICS

Table 5. Dynamic Electrical Characteristics

Characteristics noted under conditions 3.1 V ≤ V_{DD} ≤ 5.5 V, 5.5 V ≤ V_{PWR} ≤ 18 V, -40°C ≤ T_C ≤ 125°C unless otherwise noted. Where applicable, typical values reflect the parameter's approximate average value with V_{PWR} = 13 V, T_A = 25°C.

Characteristic	Symbol	Min	Typ	Max	Unit
POWER OUTPUT TIMING					
Output Slew Rate Low-Side Configuration (11) R_{LOAD} = 620 Ω, C_L = 200 pF	$t_{SR(RISE)}$	0.1	0.5	1.0	V/µs
Output Slew Rate Low-Side Configuration (11) R_{LOAD} = 620 Ω, C_L = 200 pF	$t_{SR(FALL)}$	0.1	0.5	1.0	V/µs
Output Rise Time High-Side Configuration (11) R_{LOAD} = 620 Ω, C_L = 200 pF	$t_{SR(RISE)}$	0.1	0.3	1.0	V/µs
Output Fall Time High-Side Configuration (11) R_{LOAD} = 620 Ω, C_L = 200 pF	$t_{SR(FALL)}$	0.1	0.3	1.0	V/µs
Output Turn ON Delay Time, High-Side and Low-Side Configuration (12)	$t_{DLY(ON)}$	1.0	15	50	µs
Output Turn OFF Delay Time, High-Side and Low-Side Configuration (12)	$t_{DLY(OFF)}$	1.0	30	100	µs
Output Fault Delay Time (13)	t_{FAULT}	100	–	300	µs
Power-ON Reset Delay Delay Time Required from Rising Edge of EN and V_{DD} to SPI Active	t_{POR}	100	–	–	µs
Low-State Duration on V_{DD} or EN for Reset V_{DD} or EN ≤ 0.2 V	t_{RESET}	100	–	–	µs

Notes

11. Output slew rate respectively measured across a 620 Ω resistive load at 10 to 90 percent and 90 to 10 percent voltage points. C_L capacitor is connected from Drain or Source output to Ground.
12. Output turn ON and OFF delay time measured from 50 percent rising edge of $\overline{CS}$ to the beginning of the 10 and 90 percent transition points.
13. Duration of fault before fault bit is set. Duration between access times must be greater than 300 µs to read faults.

Table 5. Dynamic Electrical Characteristics (continued)

Characteristics noted under conditions 3.1 V ≤ V_{DD} ≤ 5.5 V, 5.5 V ≤ V_{PWR} ≤ 18 V, -40°C ≤ T_C ≤ 125°C unless otherwise noted. Where applicable, typical values reflect the parameter's approximate average value with V_{PWR} = 13 V, T_A = 25°C.

Characteristic	Symbol	Min	Typ	Max	Unit
DIGITAL INTERFACE TIMING (14)					
Recommended Frequency of SPI Operation (14)	f_{SPI}	–	4.0	–	MHz
Falling Edge of $\overline{CS}$ to Rising Edge of SCLK (Required Setup Time)	t_{LEAD}	100	–	–	ns
Falling Edge of SCLK to Rising Edge of $\overline{CS}$ (Required Setup Time)	t_{LAG}	50	–	–	ns
DI to Falling Edge of SCLK (Required Setup Time)	$t_{DI(SU)}$	16	–	–	ns
Falling Edge of SCLK to DI (Required Hold Time)	$t_{DI(HOLD)}$	20	–	–	ns
DI, $\overline{CS}$, SCLK Signal Rise Time (15)	$t_{R(DI)}$	–	5.0	–	ns
DI, $\overline{CS}$, SCLK Signal Fall Time (15)	$t_{F(DI)}$	–	5.0	–	ns
Time from Falling Edge of $\overline{CS}$ to DO Low Impedance (16)	$t_{DO(EN)}$	–	–	55	ns
Time from Rising Edge of $\overline{CS}$ to DO High Impedance (17)	$t_{DO(DIS)}$	–	–	55	ns
Time from Rising Edge of SCLK to DO Data Valid (18)	t_{VALID}	–	25	55	ns

Notes

14. This parameter is guaranteed by design. Production test equipment uses 4.16 MHz, 5.5 V/3.1 V SPI interface.
15. Rise and Fall time of incoming DI, $\overline{CS}$, and SCLK signals suggested for design consideration to prevent the occurrence of double pulsing.
16. Time required for output status data to be available for use at DO pin.
17. Time required for output status data to be terminated at DO pin.
18. Time required to obtain valid data out from DO following the rise of SCLK.

TIMING DIAGRAMS

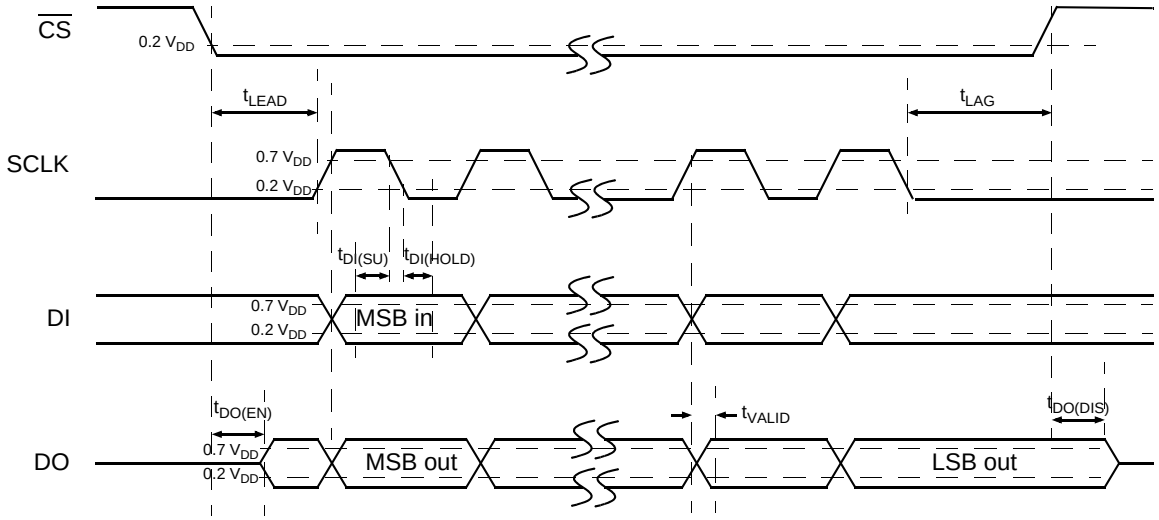

Figure 4. SPI Timing Diagram

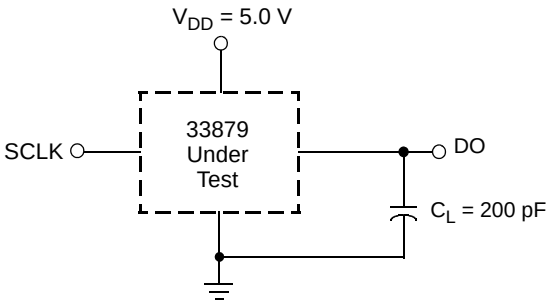

NOTE: C_L represents the total capacitance of the test fixture and probe.

Figure 5. Valid Data Delay Time and Valid Time Test Circuit

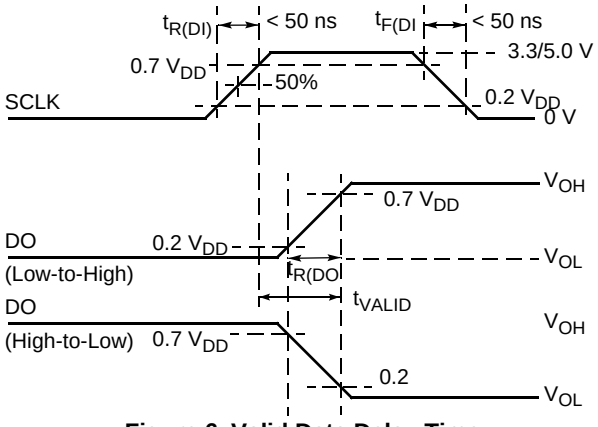

Figure 6. Valid Data Delay Time and Valid Time Waveforms

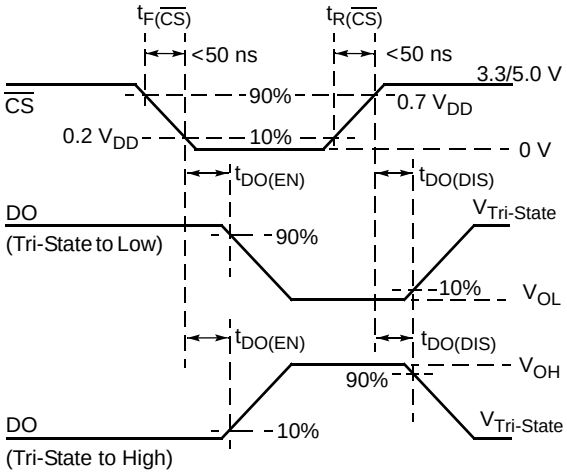

Figure 7. Enable and Disable Time Waveforms

TYPICAL ELECTRICAL CHARACTERISTICS

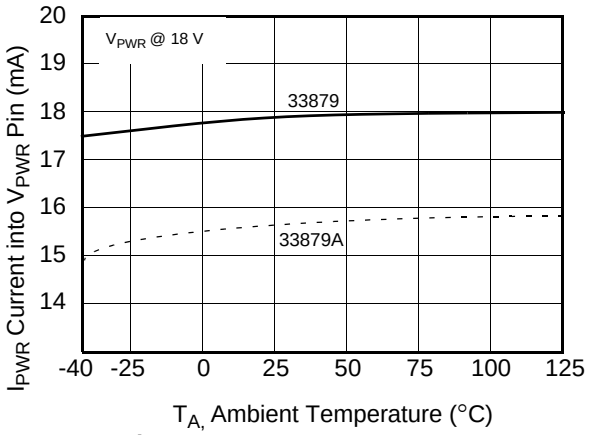

Figure 8. I_{PWR} vs. Temperature

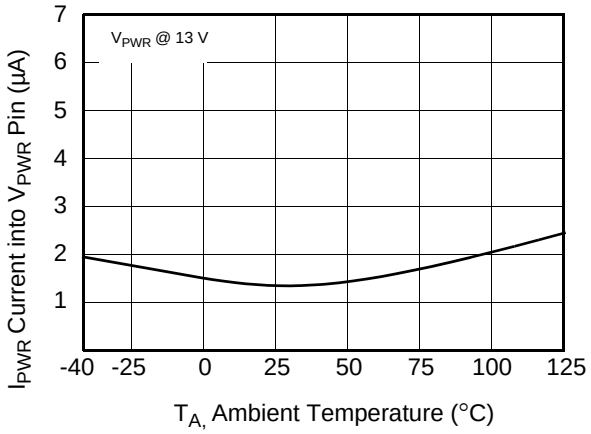

Figure 9. Sleep State I_{PWR} vs. Temperature

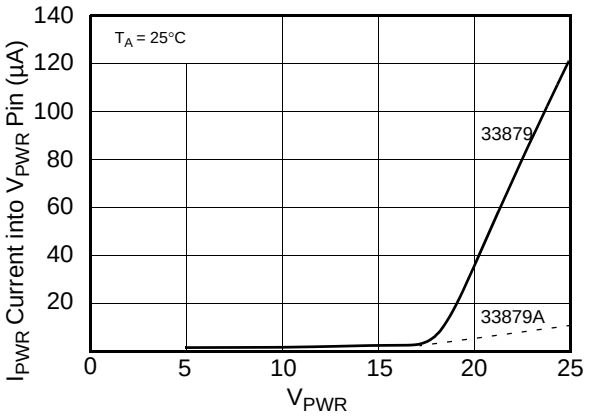

Figure 10. Sleep State I_{PWR} vs. V_{PWR}

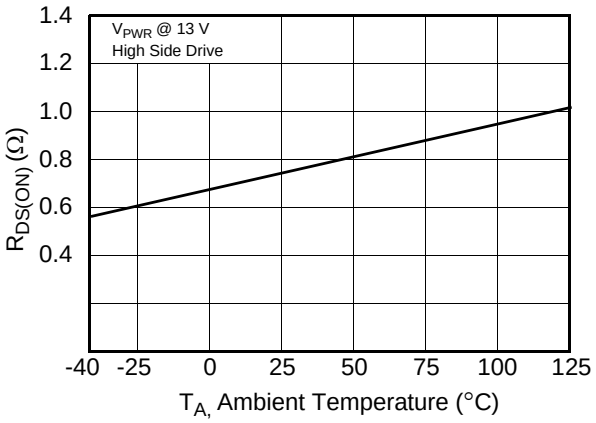

Figure 11. $R_{DS(ON)}$ vs. Temperature at 350 mA

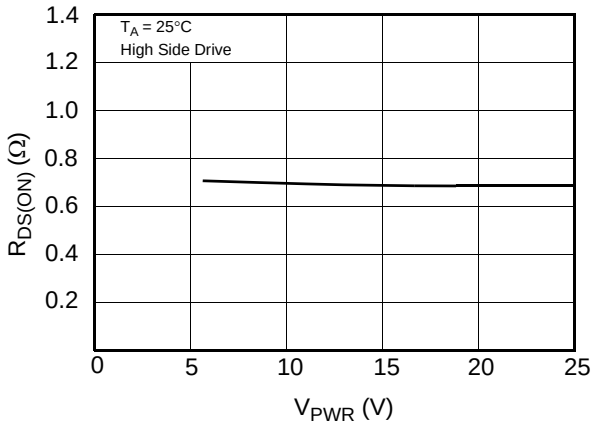

Figure 12. $R_{DS(ON)}$ vs. V_{PWR} at 350 mA

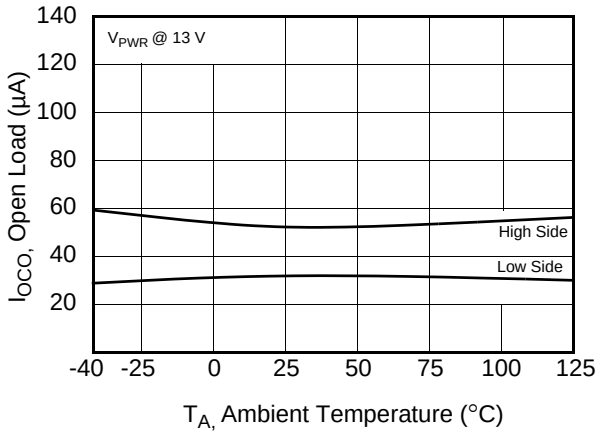

Figure 13. Open Load Detection Current at Threshold

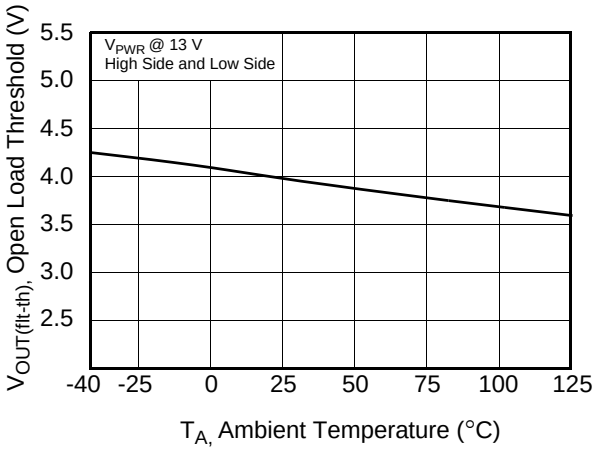

Figure 14. Open Load Detection Threshold vs. Temperature

FUNCTIONAL DESCRIPTION

FUNCTIONAL PIN DESCRIPTION

$\overline{CS}$ PIN

The system MCU selects the 33879 with which to communicate through the use of the chip select $\overline{CS}$ pin. Logic low on $\overline{CS}$ enables the data output (DO) driver and allows data to be transferred from the MCU to the 33879 and vice versa. Data clocked into the 33879 is acted upon on the rising edge of $\overline{CS}$.

To avoid any spurious data, it is essential the high-to-low transition of the $\overline{CS}$ signal occur only when SPI clock (SCLK) is in a logic low state.

SCLK PIN

The SCLK pin clocks the internal shift registers of the 33879. The serial data input (DI) pin is latched into the input shift register on the falling edge of the SCLK. The serial data output (DO) pin shifts data out of the shift register on the rising edge of the SCLK signal. False clocking of the shift register must be avoided to ensure validity of data. It is essential that the SCLK pin be in a logic low state when the $\overline{CS}$ pin makes any transition. For this reason, it is recommended the SCLK pin is commanded to a logic low state when the device is not accessed ($\overline{CS}$ in logic high state). With $\overline{CS}$ in a logic high state, signals present on SCLK and DI are ignored and the DO output is tri-state.

DI PIN

The DI pin is used for serial instruction data input. DI information is latched into the input register on the falling edge of SCLK. A logic high state present on DI will program a specific output *on*. The specific output will turn on with the rising edge of the $\overline{CS}$ signal. Conversely, a logic low state present on the DI pin will program the output *off*. The specific output will turn *off* with the rising edge of the $\overline{CS}$ signal. To program the eight outputs and Open Load Detection Current *on* or *off*, send the DI data beginning with the Open Load Detection Current bits, followed by output eight, output seven, and so on to output one. For each falling edge of the SCLK while $\overline{CS}$ is logic low, a data bit instruction (*on* or *off)* is loaded into the shift register per the data bit DI state. Sixteen bits of entered information is required to fill the input shift register.

DO PIN

The DO pin is the output from the shift register. The DO pin remains tri-state until the $\overline{CS}$ pin is in a logic low state. All faults on the 33879 device are reported as logic [1] through the DO data pin. Regardless of the configuration of the driver, open loads and shorted loads are reported as logic [1]. Conversely, normal operating outputs with non-faulted loads are reported as logic [0]. Outputs programmed with Open Load Detection Current disabled will report logic [0] in the off state. The first eight positive transitions of SCLK will report logic [0] followed by the status of the eight output drivers. The DI/DO shifting of data follows a first-in, first-out protocol with both input and output words transferring the most significant bit (MSB) first.

EN PIN

The EN pin on the 33879 enables the device. With the EN pin high, output drivers may be activated and open/short fault detection performed and reported. With the EN pin low, all outputs become inactive, Open Load Detection Current is disabled, and the device enters Sleep mode. The 33879 will perform Power-ON Reset on rising edge of the enable signal.

IN5 AND IN6 PINS

The IN5 and IN6 command inputs allow outputs five and six to be used in PWM applications. The IN5 and IN6 pins are OR-ed with the Serial Peripheral Interface (SPI) command input bits. For SPI control of outputs five and six, the IN5 and IN6 pins should be grounded or held low by the microprocessor. When using IN5 or IN6 to PWM the output, the control SPI bit must be logic [0]. Maximum PWM frequency for each output is 2.0 kHz.

V_{DD} PIN

The V_{DD} input pin is used to determine logic levels on the microprocessor interface (SPI) pins. Current from V_{DD} is used to drive DO output and the pullup current for $\overline{CS}$. V_{DD} must be applied for normal mode operation. The 33879 device will perform Power-ON Reset with the application of V_{DD}.

V_{PWR} PIN

The V_{PWR} pin is battery input and Power-ON Reset to the 33879 IC. The V_{PWR} pin has internal reverse battery protection. All internal logic current is provided from the V_{PWR} pin. The 33879 will perform Power-ON Reset with the application of V_{PWR}.

D1–D8 PINS

The D1 to D8 pins are the open-drain outputs of the 33879. For high-side drive configurations, the drain pins are connected to battery supply. In low-side drive configurations, the drain pins are connected to the low side of the load. All outputs may be configured individually as desired. When configured as low-side drive, the 33879 limits the positive inductive transient to 45 V.

S1–S8 PINS

The S1 to S8 pins are the source outputs of the 33879. For high-side drive configurations, the source pins are connected directly to the load. In low-side drive configurations, the source is connected to ground. All outputs may be configured individually as desired. When high-side drive is used, the 33879 will limit the negative inductive transient to negative 20 V.

EXPOSED PAD PIN

Device will perform as specified with the Exposed Pad unterminated (floating) however, it is recommended that the Exposed Pad be terminated to pin 1 (GND) and system ground.

MCU INTERFACE DESCRIPTION

INTRODUCTION

The 33879 is an 8-output hardware-configurable power switch with 16-bit serial control. A simplified internal block diagram of the 33879 is shown in Figure 2 on page 3.

The 33879 device uses high-efficiency up-drain power DMOS output transistors exhibiting low drain-to-source ON resistance ($R_{DS(ON)}$ = 0.75 Ω at 25°C typical) and dense CMOS control logic. All outputs have independent voltage clamps to provide fast inductive turn-off and transient protection.

In operation, the 33879 functions as an 8-output serial switch serving as a MCU bus expander and buffer with fault management and fault reporting features. In doing so, the device directly relieves the MCU of the fault management functions. This device directly interfaces to an MCU using a SPI for control and diagnostic readout. Figure 15 illustrates the basic SPI configuration between an MCU and one 33879.

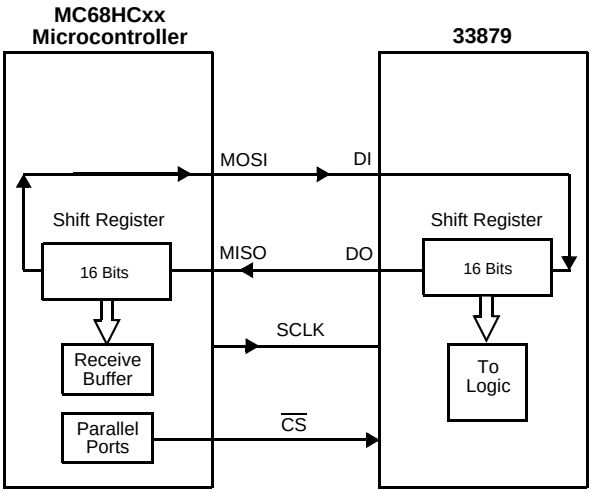

Figure 15. SPI Interface with Microcontroller

All inputs are compatible with 5.0 V and 3.3 V CMOS logic levels and incorporate positive logic. When a SPI bit is programmed to a logic [0], the corresponding output will be OFF. Conversely, when a SPI bit is programmed to logic [1] the output being controlled will be ON. Diagnostics are treated in a similar manner. Outputs with a fault will feed back (via DO) a logic [1] to the microcontroller, while normal operating outputs will provide a logic [0].

Figure 16 illustrates the daisy chain configuration using the 33879. Data from the MCU is clocked daisy chain through each device while the $\overline{CS}$ bit is commanded low by the MCU. During each clock cycle, output status from the daisy chain is transferred to the MCU via the Master In Slave Out (MISO) line. On rising edge of $\overline{CS}$, command data stored in the input register is then transferred to the output driver.

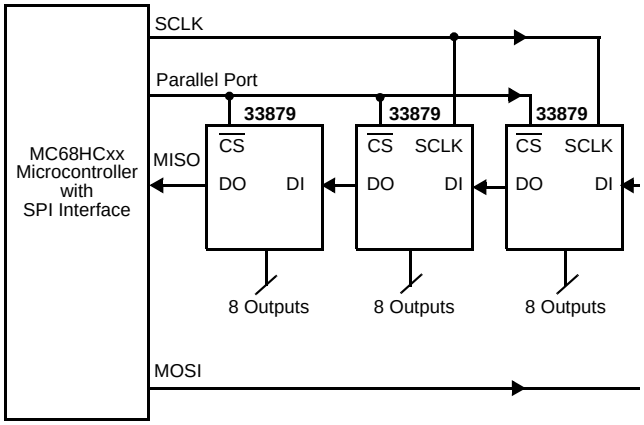

Figure 16. 33879 SPI System Daisy Chain

Multiple 33879 devices can be controlled in a parallel input fashion using the SPI. Figure 17 illustrates the control of 24 loads using three dedicated parallel MCU ports for chip select.

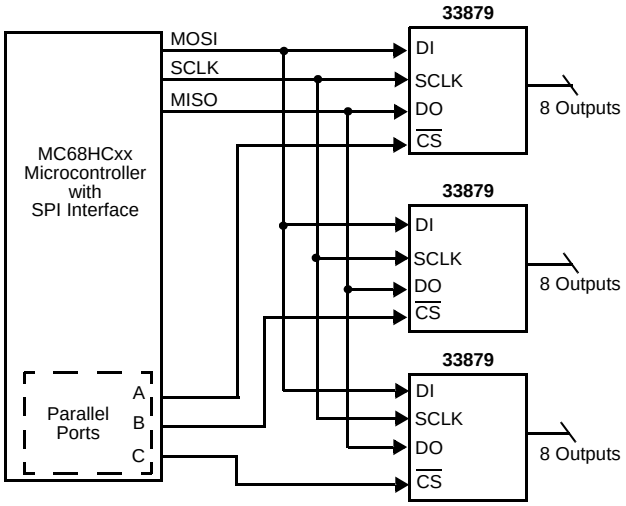

Figure 17. Parallel Input SPI Control

SPI DEFINITION

On each SPI communication, a 16-bit command word is sent to the 33879 and a 16-bit status word is received from the 33879. The MSB is sent and received first. As Table 6 shows, the Command Register defines the position and operation the 33879 will perform on rising edge of $\overline{CS}$. The Fault Register, shown in Table 7, defines the previous state status of the output driver. Table 8 identifies the type of fault and the method by which the fault is communicated to the microprocessor.

Table 6. Command Register Definition

MSB **LSB**

Bit 15	Bit 14	Bit 13	Bit 12	Bit 11	Bit 10	Bit 9	Bit 8	Bit 7	Bit 6	Bit 5	Bit 4	Bit 3	Bit 2	Bit 1	Bit 0
ON/ OFF Open Load Detect 8	ON/ OFF Open Load Detect 7	ON/ OFF Open Load Detect 6	ON/ OFF Open Load Detect 5	ON/ OFF Open Load Detect 4	ON/ OFF Open Load Detect 3	ON/ OFF Open Load Detect 2	ON/ OFF Open Load Detect 1	ON/ OFF OUT 8	ON/ OFF OUT 7	ON/ OFF OUT 6	ON/ OFF OUT 5	ON/ OFF OUT 4	ON/ OFF OUT 3	ON/ OFF OUT 2	ON/ OFF OUT 1

0 = Bits 0 to 7, Output commanded OFF.

1 = Bits 0 to 7, Output commanded ON.

0 = Bits 8 to 15, Open Load Detection Current OFF.

1 = Bits 8 to 15 Open Load Detection Current ON.

Table 7. Fault Register Definition

MSB **LSB**

Bit 15	Bit 14	Bit 13	Bit 12	Bit 11	Bit 10	Bit 9	Bit 8	Bit 7	Bit 6	Bit 5	Bit 4	Bit 3	Bit 2	Bit 1	Bit 0
0	0	0	0	0	0	0	0	OUT 8 Status	OUT 7 Status	OUT 6 Status	OUT 5 Status	OUT 4 Status	OUT 3 Status	OUT 2 Status	OUT 1 Status

0 = Bits 0 to 7, No Fault at Output.

1 = Bits 0 to 7, Output Short-to-Battery, Short-to-GND, Open Load, or T_{LIM}.

Bits 8 to 15 will always return “0”.

Table 8. Fault Operation

Serial Output (DO) Pin Reports

Overtemperature	Fault reported by serial output (DO) pin.
Overcurrent	DO pin reports short to battery/supply or overcurrent condition.
Output ON Open Load Fault	Not reported.
Output OFF Open Load Fault	DO pin reports output OFF open load condition only with Open Load Detection Current enabled. DO pin will report “0” for Output OFF Open Load Fault with Open Load Detection Current disabled.

Device Shutdowns

Overvoltage	Total device shutdown at $V_{PWR} = V_{PWR(OV)}$ V. Resumes normal operation with proper voltage. All outputs assuming the previous state upon recovery from overvoltage.
Overtemperature	Only the output experiencing an overtemperature shuts down. Output assumes previous state upon recovery from overtemperature.

DEVICE OPERATION

POWER SUPPLY

The 33879 device has been designed with ultra-low Sleep mode currents. The device may enter Sleep mode via the EN pin or the V_{DD} pin. In the Sleep mode (EN or $V_{DD} \leq 0.8$ V), the current consumed by the V_{PWR} pin is less than 5.0 μA.

Placing the 33879 in Sleep mode resets the internal registers to the Power-ON Reset state. The reset state is defined as all outputs off and Open Load Detection Current disabled.

To place the 33879 in the Sleep mode, either command all outputs off and apply logic low to the EN input pin or remove power from the V_{DD} supply pin. Prior to removing V_{DD} from the device, it is recommended that all control inputs from the MCU be low.

PARALLELING OF OUTPUTS

Using MOSFETs as an output switch conveniently allows the paralleling of outputs for increased current capability. $R_{DS(ON)}$ of MOSFETs have an inherent positive temperature coefficient that provides balanced current sharing between outputs without destructive operation. This mode of operation may be desirable in the event the application requires lower power dissipation or the added capability of switching higher currents. Performance of parallel operation results in a corresponding decrease in $R_{DS(ON)}$ while the output OFF Open Load Detection Currents and the output current limits increase correspondingly. Paralleling outputs from two or more different IC devices is possible but not recommended.

FAULT LOGIC OPERATION

Fault logic of the 33879 device has been greatly simplified over other devices using SPI communications. As command word one is being written into the shift register, a fault status word is being simultaneously written out and received by the MCU. Regardless of the configuration, with no outputs faulted and Open Load Detection Current enabled, all status bits being received by the MCU will be zero. When outputs are faulted (off state open circuit or on state short circuit/ overtemperature), the status bits being received by the MCU will be one. The distinction between open circuit fault and short/overtemperature is completed via the command word. For example, when a zero command bit is sent and a one fault is received in the following word, the fault is open/short-to-battery for high-side drive or open/short-to-ground for low-side drive. In the same manner, when a one command bit is sent and a one fault is received in the following word, the fault is a short-to-ground/overtemperature for high-side drive or short-to-battery/overtemperature for low-side drive. The timing between two write words must be greater than 300 μs to allow adequate time to sense and report the proper fault status.

SPI INTEGRITY CHECK

Checking the integrity of the SPI communication with the initial power-up of the V_{DD} and EN pins is recommended. After initial system start-up or reset, the MCU will write one 32-bit pattern to the 33879. The first 16 bits read by the MCU will be 8 logic [0]s followed by the fault status of the outputs. The second 16 bits will be the same bit pattern sent by the MCU. By the MCU receiving the same bit pattern it sent, bus integrity is confirmed. Please note the second 16-bit pattern the MCU sends to the device is the command word and will be transferred to the outputs with rising edge of $\overline{CS}$.

Important A SCLK pulse count strategy has been implemented to ensure integrity of SPI communications. SPI messages consisting of 16 SCLK pulses and multiples of 8 clock pulses thereafter will be acknowledged. SPI messages consisting of other than 16 + multiples of 8 SCLK pulses will be ignored by the device.

OVERTEMPERATURE FAULT

Overtemperature detection and shutdown circuits are specifically incorporated for each individual output. The shutdown following an overtemperature condition is independent of the system clock or any other logic signal. Each independent output shuts down at 155°C to 185°C. When an output shuts down owing to an overtemperature fault, no other outputs are affected. The MCU recognizes the fault by a one in the fault status register. After the 33879 device has cooled below the switch point temperature and 15°C hysteresis, the output will activate unless told otherwise by the MCU via SPI to shut down.

OVERVOLTAGE FAULT

An overvoltage condition on the V_{PWR} pin will cause the device to shut down all outputs until the overvoltage condition is removed. When the overvoltage condition is removed, the outputs will resume their previous state. This device does not detect an overvoltage on the V_{DD} pin. The overvoltage threshold on the V_{PWR} pin is specified as $V_{PWR(OV)}$ V, with 1.0 V typical hysteresis. A V_{PWR} overvoltage detection is *global*, causing all outputs to be turned OFF.

OUTPUT OFF OPEN LOAD FAULT

An output OFF open load fault is the detection and reporting of an *open* load when the corresponding output is disabled (input bit programmed to a logic low state). The Output OFF Open Load fault is detected by comparing the drain-to-source voltage of the specific MOSFET output to an internally generated reference. Each output has one dedicated comparator for this purpose.

An output OFF open load fault is indicated when the drain-to-source voltage is less than the output threshold voltage ($V_{OUT(flt-th)}$) of 2.5 V to 4.0 V. Hence, the 33879 will declare the load *open* in the OFF state when the output drain-to-source voltage is less than $V_{OUT(flt-th)}$.

This device has an internal 80 μA current source connected from drain to source of the output MOSFET. The current source may be programmed on or off via SPI. The Power-ON Reset state for the current source is "off" and must be enabled via SPI. To achieve low Sleep mode quiescent currents, the Open Load Detection Current source of each driver is switched off when V_{DD} or EN is removed.

During output switching, especially with capacitive loads, a false output OFF open load fault may be triggered. To prevent this false fault from being reported, an internal fault filter of 100 μs to 300 μs is incorporated. A false fault reporting is a function of the load impedance, $R_{DS(ON)}$, C_{OUT} of the MOSFET, as well as the supply voltage, V_{PWR}. The rising edge of $\overline{CS}$ triggers the built-in fault delay timer. The timer will time out before the fault comparator is enabled and the fault is detected. Once the condition causing the open load fault is removed, the device will resume normal operation. The open load fault, however, will be latched in the output DO register for the MCU to read.

SHORTED LOAD FAULT

A shorted load (overcurrent) fault can be caused by any output being shorted directly to supply, or an output experiencing a current greater than the current limit.

There are two safety circuits progressively in operation during load short conditions that provide system protection:

1. The device's output current is monitored in an analog fashion using SENSEFET approach and current limited.
2. The device's output thermal limit is sensed and when attained causes only the specific faulted output to shut down. The output will remain off until cooled. The device will then reassert the output automatically. The cycle will continue until fault is removed or the command bit instructs the output off. Shorted load faults will be reported properly through SPI regardless of Open Load Detection Current enable bits.

UNDERVOLTAGE SHUTDOWN

An undervoltage condition on V_{DD} or V_{PWR} will result in the shutdown of all outputs. The V_{DD} undervoltage threshold is between 0.8 V and 3.0 V. V_{PWR} undervoltage threshold is between 3.0 V and 5.0 V. When the supplies fall below their respective thresholds, all outputs are turned OFF. As both supplies returns to normal levels, internal logic is reset and the device resumes normal operation.

OUTPUT VOLTAGE CLAMP

Each output of the 33879 incorporates an internal voltage clamp to provide fast turn-off and transient protection of each output. Each clamp independently limits the drain-to-source voltage to 45 V for low-side drive configurations and -20 V for high-side drive configurations. The total energy clamped (E_J) can be calculated by multiplying the current area under the current curve (I_A) times the clamp voltage (V_{CL}) (see Figure 18).

Characterization of the output clamps, using a single pulse non-repetitive method at 0.35 A, indicates the maximum energy per output to be 50 mJ at 150°C junction temperature.

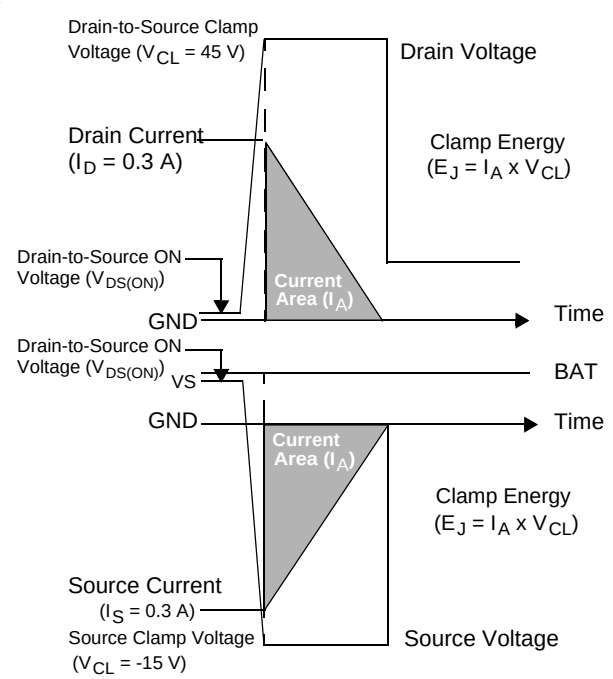

Figure 18. Output Voltage Clamping

SPI CONFIGURATIONS

The SPI configuration on the 33879 device is consistent with other devices in the Octal Serial Switch (OSS) family. This device may be used in serial SPI or parallel SPI with the 33298 and 33291. Different SPI configurations may be provided. For more information, contact Freescale Analog Products Division or local Freescale representative.

REVERSE BATTERY

The 33879 has been designed with reverse battery protection on the V_{PWR} pin.

All outputs consist of a power MOSFET with an integral substrate diode. During the reverse battery condition, current will flow through the load via the substrate diode. Under this circumstance, relays may energize and lamps will turn on. Where load reverse battery protection is desired, a reverse battery blocking diode must be placed in series with the load.

PACKAGING

PACKAGE DIMENSIONS

Important: For the most current revision of the package, visit **www.freescale.com** and perform a keyword search using the "98A" drawing number listed below.

DWB SUFFIX
EK (Pb-FREE) SUFFIX
32-LEAD SOICW EXPOSED PAD
PLASTIC PACKAGE
98ARL10543D
ISSUE O

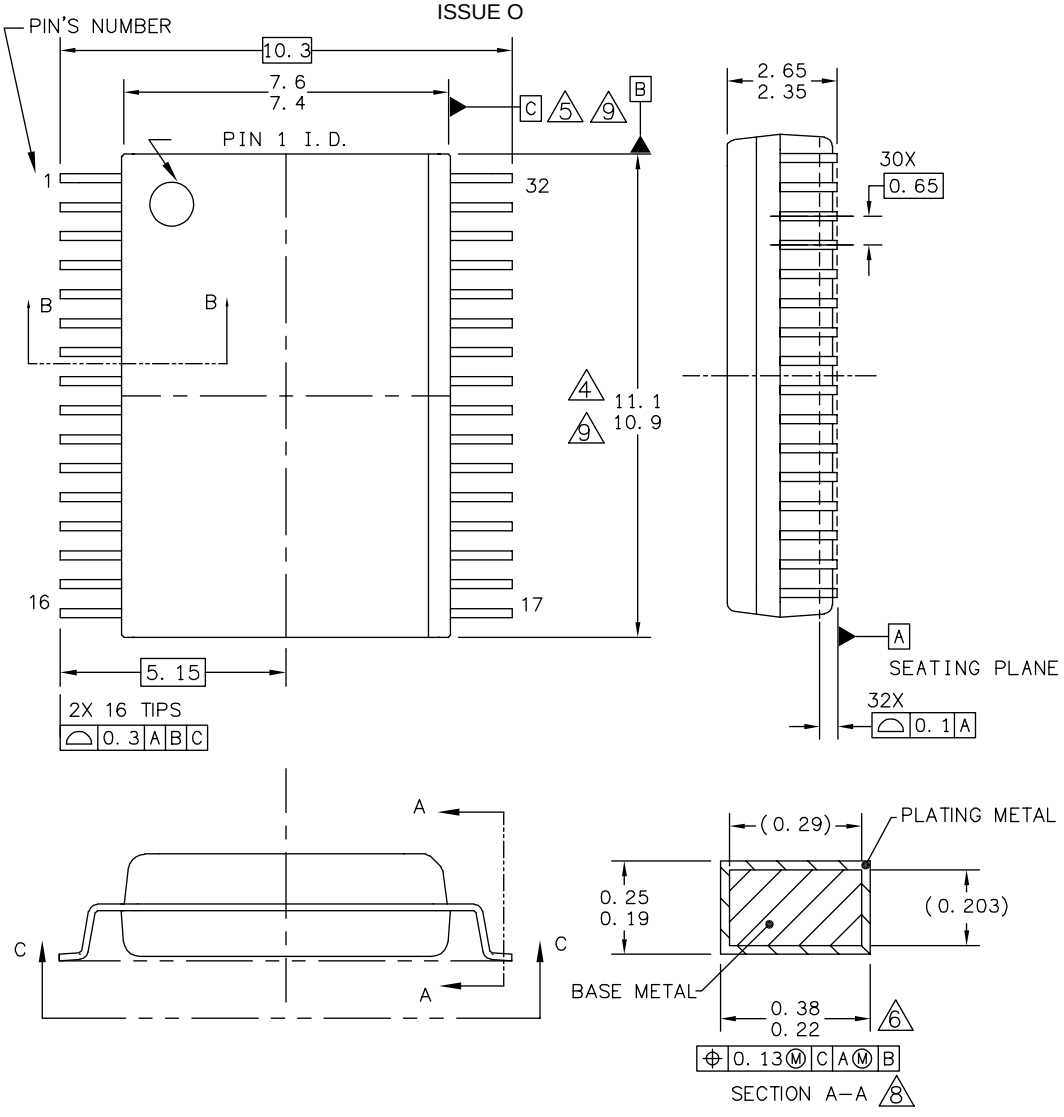

© FREESCALE SEMICONDUCTOR, INC. ALL RIGHTS RESERVED.	MECHANICAL OUTLINE	PRINT VERSION NOT TO SCALE
TITLE: 32LD SOIC W/B, 0.65 PITCH 5.7 X 4.6 EXPOSED PAD CASE OUTLINE	DOCUMENT NO: 98ARL10543D	REV: B
	CASE NUMBER: 1437–02	28 MAR 2005
	STANDARD: MOT STD	

33879

PACKAGE DIMENSIONS (CONTINUED)

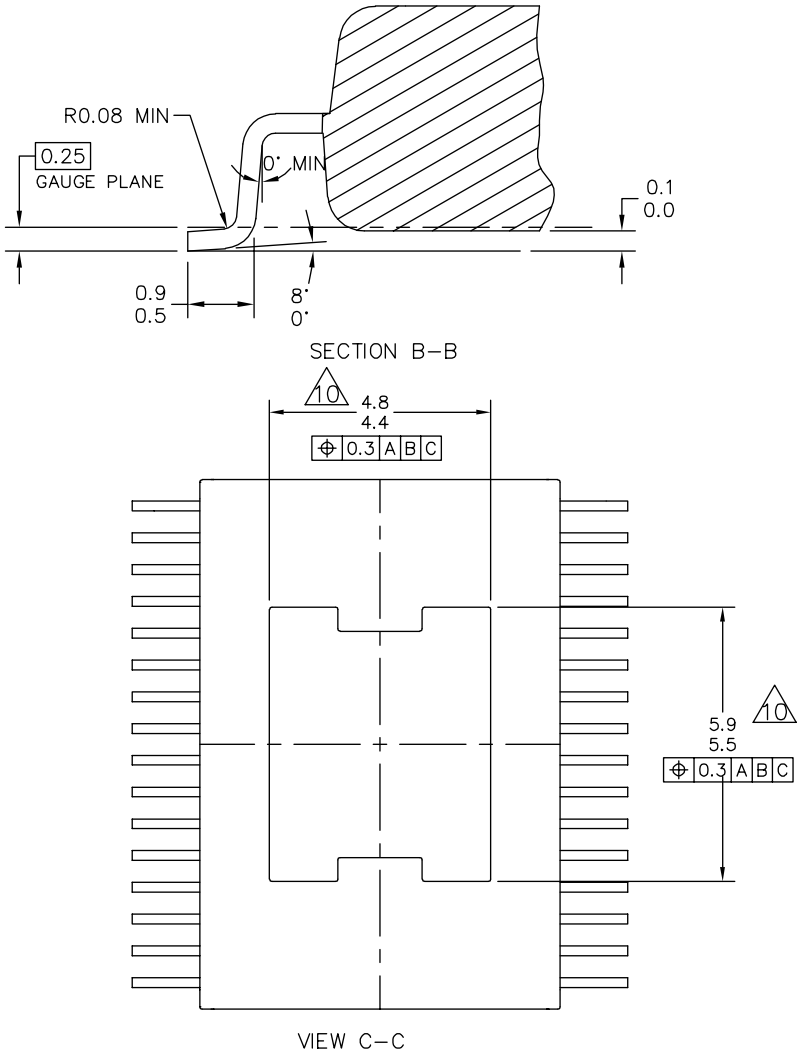

© FREESCALE SEMICONDUCTOR, INC. ALL RIGHTS RESERVED.	**MECHANICAL OUTLINE**	PRINT VERSION NOT TO SCALE
TITLE: 32LD SOIC W/B, 0.65 PITCH 5.7 X 4.6 EXPOSED PAD CASE OUTLINE	DOCUMENT NO: 98ARL10543D	REV: B
	CASE NUMBER: 1437–02	28 MAR 2005
	STANDARD: MOT STD	

33879

REVISION HISTORY

REVISION	DATE	DESCRIPTION OF CHANGES
5.0	2/2006	• Page 2, Figure 1; An exposed pad internal block and EP pin have been added to the internal block diagram. • Page 4, Table 1; Table 1 has been updated to reflect the Exposed pad pin and pin definition. • Page 6, Table 3; Logic Supply Sleep State Hysteresis and Note 7 have been removed. The VDD Supply contains no hysteresis. • Page 7, Table 3; Output Fault Detection Current @ Threshold, High-Side Configuration Max parameter has been increased from 70uA to 90uA. • Page 7, Table 3; Output OFF Open Load Detection Current, High-Side Configuration has been updated to reflect the voltage of the VPWR pin during the parameter test. • Page 7, Table 3; Output OFF Open Load Detection Current, Low-Side Configuration has been updated to reflect the voltage of the VPWR pin during the parameter test. • Page 7, Table 3; Output Leakage Current High-Side and Low-Side Configuration Max parameter has been decreased from 7uA to 5uA. • Page 15, Functional Pin Description; A description has been added for the Exposed Pad pin. • Page 1, Device isometric; Corrected orientation of IC pin 1 from top left to bottom right. • ALL Pages; Updated Data Sheet to reflect Freescale formatting.
6.0	6/2007	• Added 33879A version • Added MCZ33879EK/R2 and MCZ33879AEK/R2 to the Ordering Information • Added Device Variations on page 2 • Removed Peak Package Reflow Temperature During Reflow (solder reflow) parameter from Maximum Rations on page 6. Added note with instructions from www.freescale.com. • Changed Output Fault Detection Voltage Threshold (7) on page 8 • Renumbered X axis on Figure 14 - Open Load Detection Threshold vs. Temperature on page 14 • Changed Overvoltage on page 18 and Overvoltage Fault on page 19

How to Reach Us:

Home Page:
www.freescale.com

E-mail:
support@freescale.com

USA/Europe or Locations Not Listed:
Freescale Semiconductor
Technical Information Center, CH370
1300 N. Alma School Road
Chandler, Arizona 85224
+1-800-521-6274 or +1-480-768-2130
support@freescale.com

Europe, Middle East, and Africa:
Freescale Halbleiter Deutschland GmbH
Technical Information Center
Schatzbogen 7
81829 Muenchen, Germany
+44 1296 380 456 (English)
+46 8 52200080 (English)
+49 89 92103 559 (German)
+33 1 69 35 48 48 (French)
support@freescale.com

Japan:
Freescale Semiconductor Japan Ltd.
Headquarters
ARCO Tower 15F
1-8-1, Shimo-Meguro, Meguro-ku,
Tokyo 153-0064
Japan
0120 191014 or +81 3 5437 9125
support.japan@freescale.com

Asia/Pacific:
Freescale Semiconductor Hong Kong Ltd.
Technical Information Center
2 Dai King Street
Tai Po Industrial Estate
Tai Po, N.T., Hong Kong
+800 2666 8080
support.asia@freescale.com

For Literature Requests Only:
Freescale Semiconductor Literature Distribution Center
P.O. Box 5405
Denver, Colorado 80217
1-800-441-2447 or 303-675-2140
Fax: 303-675-2150
LDCForFreescaleSemiconductor@hibbertgroup.com

RoHS-compliant and/or Pb-free versions of Freescale products have the functionality and electrical characteristics of their non-RoHS-compliant and/or non-Pb-free counterparts. For further information, see http://www.freescale.com or contact your Freescale sales representative.

For information on Freescale's Environmental Products program, go to http://www.freescale.com/epp.

Information in this document is provided solely to enable system and software implementers to use Freescale Semiconductor products. There are no express or implied copyright licenses granted hereunder to design or fabricate any integrated circuits or integrated circuits based on the information in this document.

Freescale Semiconductor reserves the right to make changes without further notice to any products herein. Freescale Semiconductor makes no warranty, representation or guarantee regarding the suitability of its products for any particular purpose, nor does Freescale Semiconductor assume any liability arising out of the application or use of any product or circuit, and specifically disclaims any and all liability, including without limitation consequential or incidental damages. "Typical" parameters that may be provided in Freescale Semiconductor data sheets and/or specifications can and do vary in different applications and actual performance may vary over time. All operating parameters, including "Typicals", must be validated for each customer application by customer's technical experts. Freescale Semiconductor does not convey any license under its patent rights nor the rights of others. Freescale Semiconductor products are not designed, intended, or authorized for use as components in systems intended for surgical implant into the body, or other applications intended to support or sustain life, or for any other application in which the failure of the Freescale Semiconductor product could create a situation where personal injury or death may occur. Should Buyer purchase or use Freescale Semiconductor products for any such unintended or unauthorized application, Buyer shall indemnify and hold Freescale Semiconductor and its officers, employees, subsidiaries, affiliates, and distributors harmless against all claims, costs, damages, and expenses, and reasonable attorney fees arising out of, directly or indirectly, any claim of personal injury or death associated with such unintended or unauthorized use, even if such claim alleges that Freescale Semiconductor was negligent regarding the design or manufacture of the part.

Freescale™ and the Freescale logo are trademarks of Freescale Semiconductor, Inc. All other product or service names are the property of their respective owners.

© Freescale Semiconductor, Inc., 2007. All rights reserved.

MC33879
Rev 6.0
6/2007

freescale™ semiconductor