

3/8" ROUND / SINGLE-TURN / CERMET INDUSTRIAL / OPEN FRAME

- Adjustable from front and rear, or top and bottom
- Carbon tip wiper for long life
- Durable metal construction

BOURNS

OBSOLETE

Model 3359/VA05*

Trimming Potentiometer

Electrical Characteristics

Standard Resistance Range ..... 100 to 2 megohms (see standard resistance table)
Resistance Tolerance ..... ±20% std.
Absolute Minimum Resistance ..... 1.0% or 2 ohms max. (whichever is greater)
Contact Resistance Variation ..... 2.0% or 3 ohms max. (whichever is greater)
Resolution ..... Infinite
Adjustment Angle ..... 250° nom.

Environmental Characteristics

Power Rating (250 volts max.)
70°C ..... 0.5 watt
125°C ..... 0 watt
Temperature Range ..... -65°C to +125°C
Temperature Coefficient
100 ohms to 1K ohms ..... ±300ppm/°C
2K ohms to 2 megohms ..... +150/-50ppm°C
Humidity ..... MIL-STD-202 Method 103 504 hours (2% ΔTR)
Vibration ..... 30G (2% ΔTR; 2% ΔVR)
Shock ..... 100G (2% ΔTR; 2% ΔVR)
Load Life ..... 1,000 hours 0.5 watt @ 70°C (2% ΔTR)
Rotational Life ..... 500 cycles (10% ΔTR)

Physical Characteristics

Mechanical Angle ..... 270° nom.
Torque ..... 6.0 oz-in. max. 1.5 oz-in. min.
Stop Strength ..... 12 oz -in. min.
Terminals ..... Solderable pins
Weight ..... 0.04 oz.
Marking ..... Manufacturer's trademark, resistance code, and model number.
Standard Packaging .. 40 pcs. per tube

3359

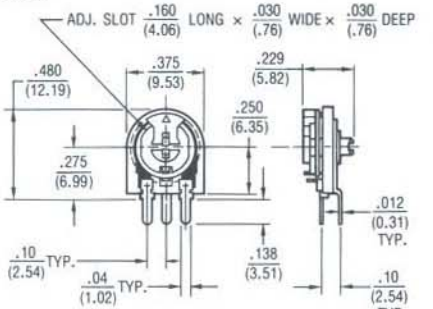

3359P/VA05H

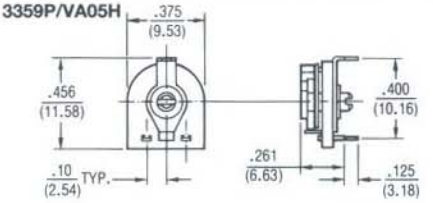

3359W/VA05V

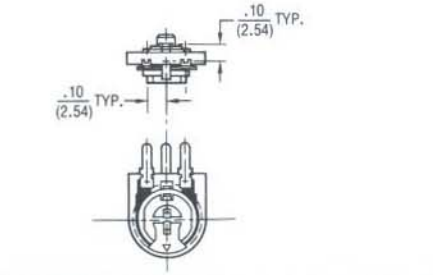

TOLERANCES: ± .010 (.25) EXCEPT WHERE NOTED

DIMENSIONS: IN. (MM)

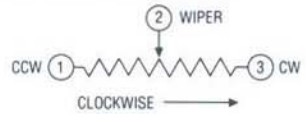

STANDARD RESISTANCE TABLE

Resistance (Ohms)	Resistance Code
100	101
200	201
500	501
1,000	102
2,000	202
5,000	502
10,000	103
20,000	203
50,000	503
100,000	104
200,000	204
500,000	504
1,000,000	105
2,000,000	205

HOW TO ORDER

3359 P - 1 - 103

Model
3359 Standard
VA05 Europe

Style

Standard or Modified Product Indicator
-1 = Standard Product
-10 = 10% Resistance Tolerance

Resistance Code

Consult factory for other available options.

OBSOLETE

Specifications are subject to change without notice.
*"Fluorinert" is a registered trademark of 3M Co.