Instructions for the installation of 3316 Universal Press

General:

The 3316 Universal Press is a manual machine on which are positioned various fixtures in specific combinations particular to each connector and type of wire terminated.

Set-Up Instructions:

1. After removing the four shipping screws from the plywood pallet, set the machine on a flat work surface at a convenient height for the operator.

2. For those desiring the machine to angle forward, install the two swivel feet in the rear shipping screw holes. Adjust the lower nuts for height, and tighten the upper nuts against the base plate, (Figure 1), **OR,**

   If the operator desires the machine to be anchored, use the four shipping screw holes (Figure 1), and screw or bolt the base plate to the work surface, **OR,**

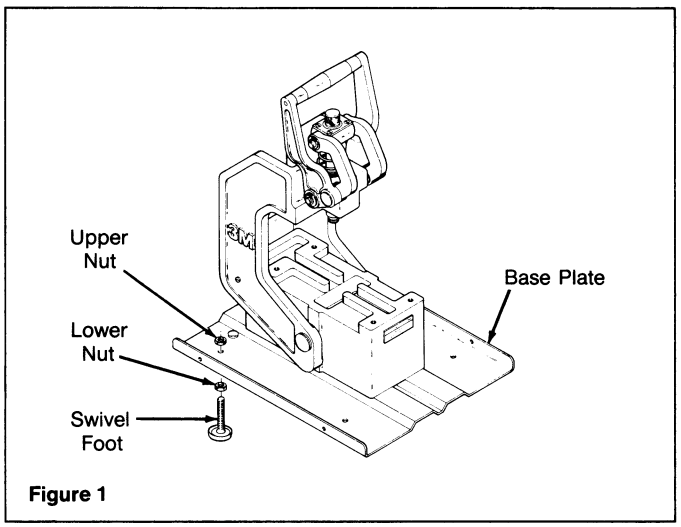

Figure 1

   Remove the base plate (Figure 2) and, using the plate as a template, drill four holes through the work surface and secure the press from underneath with 1/4-20 UNC screws.

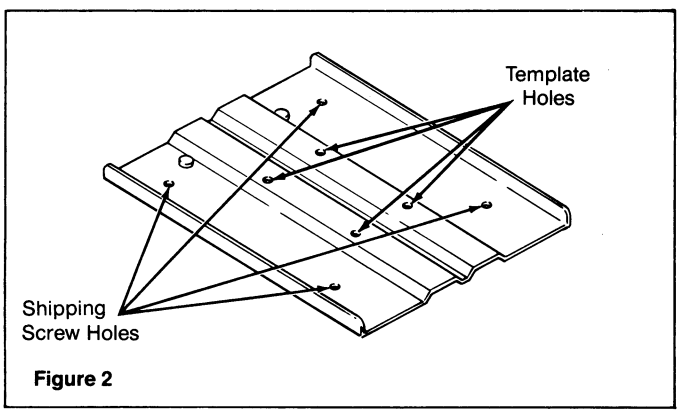

Figure 2

3. Disengage the tilt-back head from its locked shipping position by unscrewing the slotted captive screw (Figure 3) at the rear of the press, and tilt the head back. This allows the operator greater visibility during wire preparation.

   Caution: Be sure the press head is in its upright and secured position when the machine is being moved.

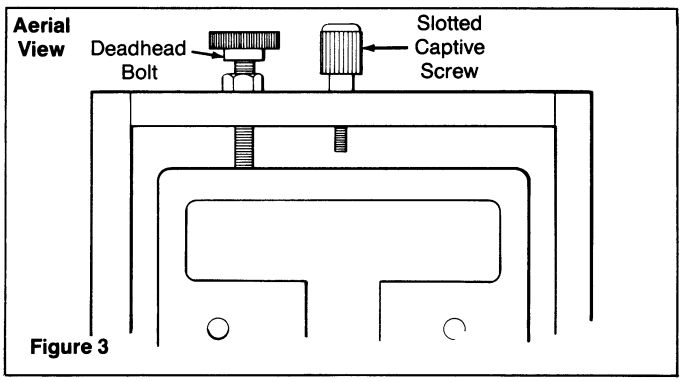

Figure 3

4. Install the Discrete Wire Block or Locator Plate Riser Block and then the accessories required, depending on your particular assembly. Instructions for their installation and use are provided with each accessory.

Adjustments:

If the press head does not locate properly in the upright position, either or both of the following adjustments may be required to solve the problem:

1. The positioning mechanism which keeps the press head assembly upright is a spring-loaded ball plunger (Figure 4) which is factory adjusted to the correct retention pressure. This pressure can be varied if necessary with a simple screwdriver adjustment (clockwise for more pressure; counterclockwise for less.)

2. The deadhead bolt is adjusted as follows. With the press head held in the upright position by the spring-loaded ball plunger, screw the deadhead bolt in (Figure 3) until it comes in contact with the base. Then use a wrench to tighten its locking nut firmly in place.

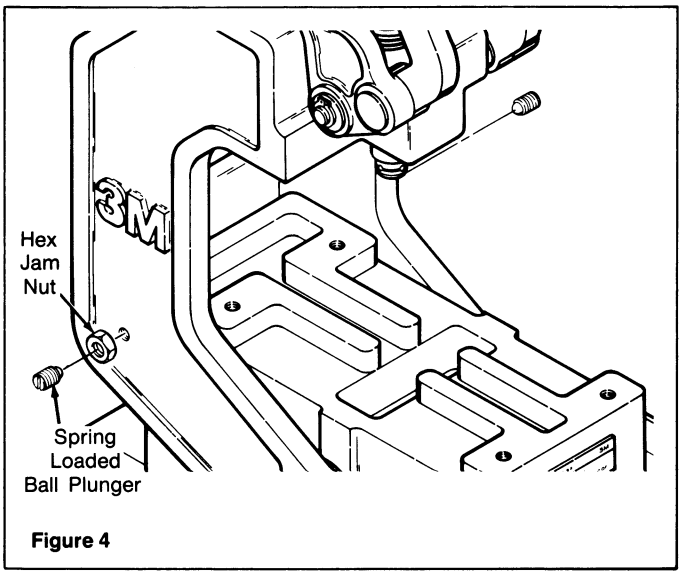

Figure 4

Press Shaft Realignment:

The rotational alignment of the press shaft is factory-set for proper operation. If misuse or accident has gotten it out of alignment, this can be corrected easily:

1. Loosen the two socket head cap screws on the retainer (Figure 5). Install a crimp bar or platen on the shaft, visually realign the shaft in the proper position, and move the retainer against the flat area of the shaft.

2. Retighten the socket head cap screws to secure the adjustment.

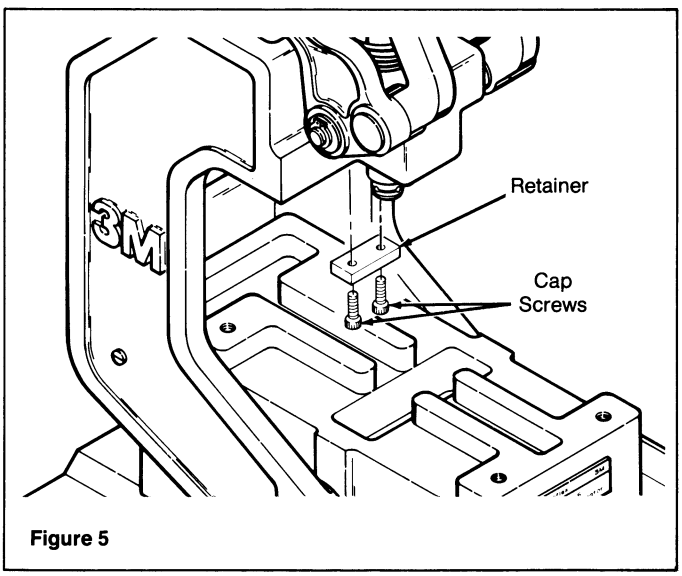

Figure 5

Maintenance:

The 3316 Universal Press is virtually maintenance free. Should a replacement part ever be needed, refer to the exploded view and parts list shown and contact your Scotchflex representative.

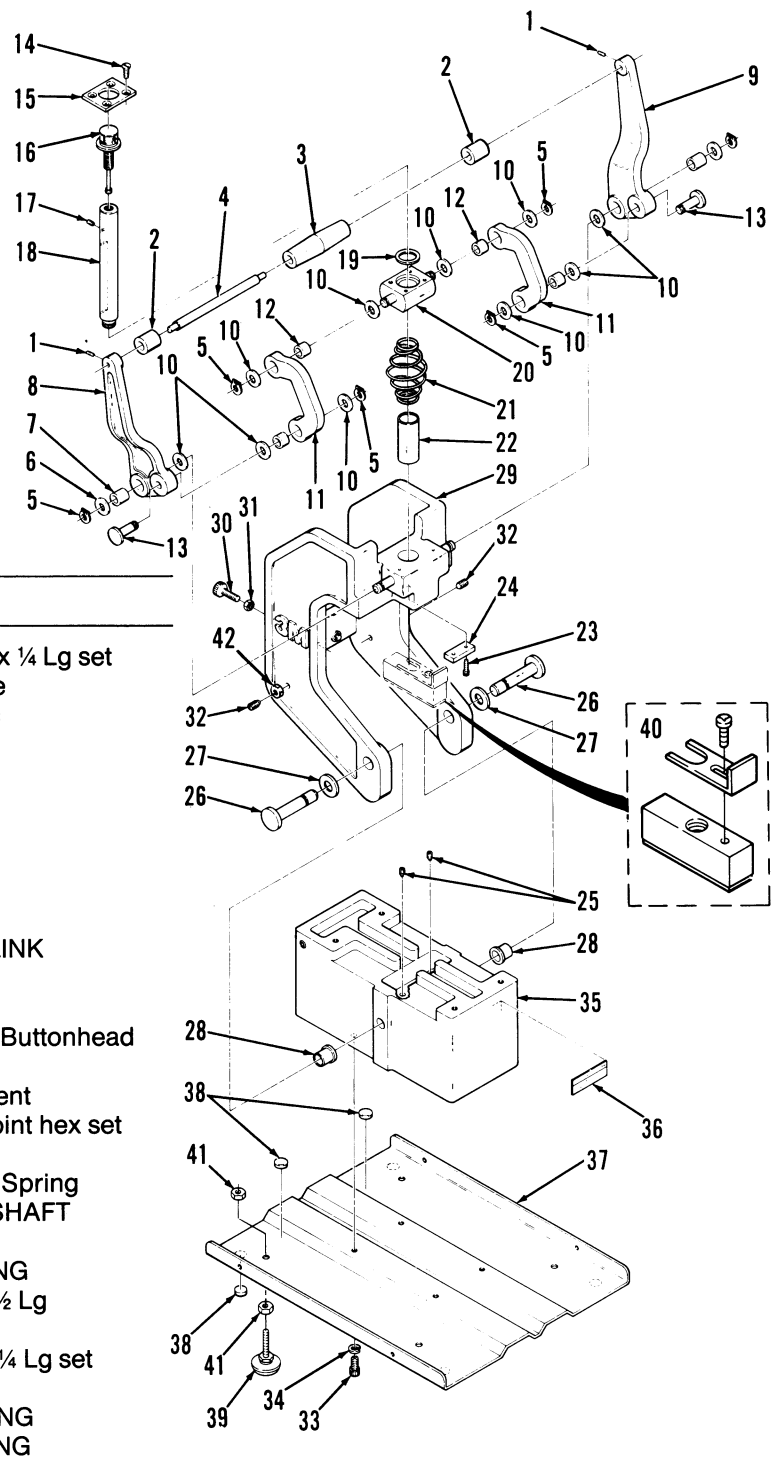

Item No.	Part Number	Description
1	18-3413-2615-7	SCREW, #10-24 x ¼ Lg set
2	78-8014-2627-0	SPACER, Handle
3	78-8005-0623-6	HANDLE, Plastic
4	78-8041-2626-2	HANDLE, Shaft
5	78-8656-4003-7	RING, Retaining
6	70-7023-8760-9	WASHER, Nylon
7	26-1004-5966-3	BUSHING
8	78-8041-2635-3	L.H. HANDLE
9	78-8041-2632-0	R.H. HANDLE
10	70-7023-8760-9	WASHER
11	78-8041-2621-3	CONNECTING LINK
12	78-8001-7169-2	BUSHING
13	78-8041-2629-6	PIN, Pivot
14	26-1002-6527-6	SCREW, #10-32 Buttonhead
15	78-8041-2628-8	PLATE
16	78-8027-0487-0	KNOB, Adjustment
17	12-7997-0568-1	SCREW, CUP Point hex set
18	78-8041-2622-1	PRESS SHAFT
19	26-1004-1383-5	WASHER, Wave Spring
20	78-8041-2636-1	CONNECTING SHAFT
21	78-8041-4373-9	SPRING
22	26-1004-0889-2	SLEEVE BEARING
23	26-1001-7280-3	SCREW, 5-40 x ½ Lg
24	78-8041-4372-1	RETAINER
25	26-1001-7113-6	SCREW, ¼-20 x ¼ Lg set
26	78-8041-2620-5	SHAFT, Pivot
27	78-8003-8257-0	THRUST BEARING
28	78-8061-4231-5	FLANGE BEARING
29	78-8041-2639-5	PRESS HEAD ASSY.
30	18-3174-6603-7	SCREW, ¼-20 x ⅞ Lg
31	18-1728-2703-4	Nut, ¼-20 Hex
32	12-7994-0777-5	BALL PLUNGER, ½-13 w/Nylok
33	18-3174-5816-6	SCREW, ¼-20 x ½ Lg
34	18-9832-1400-0	LOCKWASHER, ¼
35	78-8041-2600-7	PRESS BASE
36	78-8041-4374-7	LABEL
37	78-8041-2637-9	BASEPLATE
38	78-8032-7424-6	BUMPER
39	26-1004-5693-3	SWIVEL FEET (2 ea.)
40	78-8004-5791-9	PLATEN
41	12-7991-1510-5	NUT, ¼-20
42	70-8000-5374-9	NUT, ½-13

Model 3316 Universal Press

Equipment Warranty and Limitation of Remedies

3M warrants the Scotchflex® Model 3316 Universal Press to be free of defects for a period of ninety (90) days when installed and used as directed in the Owner's Manual. 3M's exclusive obligation and the buyer's exclusive remedy shall be repair or replacement, at 3M's option, of defective parts reported to 3M within 90 days from the date of purchase. This warranty does not include (1) lubrication, cleaning and regular maintenance specified in the Owner's Manual; (2) parts which fail due to inadequate lubrication, cleaning or maintenance; (3) parts which fail due to misuse, carelessness or accident.

This warranty is in lieu of any other warranties, expressed or implied, including warranties of merchantability and fitness for purpose.

Should a defect or failure occur after the warranty period has elapsed, or as a result of misuse, a charge will be made for repair or replacement of parts. Any shipping costs will be paid by 3M only for parts under warranty.

For prompt service, contact your Scotchflex® representative or distributor.

The foregoing may not be changed except by a written agreement signed by an authorized officer of 3M.

Limitation of Liability

3M shall not be liable to any buyer, operator, or any other person for any bodily injury, death, loss of, or damage to property, whether direct, incidental or consequential, regardless of legal theory asserted including negligence and/or strict liability.

The foregoing may not be changed except by a written agreement signed by an authorized officer of 3M.

Electronic Products Division/3M
3M Center, St. Paul, MN 55144

34-7017-3718-0(93.5)R1
© 1983 Minnesota Mining & Manufacturing Co.
Litho in U.S.A.

Electronic Products Division/3M
225-1N 3M Center
St. Paul, MN 55144

3M