A. Electrical Specifications:

Part Number	L(uH) ±15% @1KHz	I dc (Amps) Max.	L (uH) Min. @ I dc	DCR Max. (Ω)	Dim Max. (In) A	B	C	Lead Dia. Nom.
3261I01LH	25	2.50	16	0.050	0.550	0.240	0.150	0.020
3261I02LH	35	2.50	29	0.035	0.700	0.320	0.150	0.025
3261I03LH	50	2.50	35	0.060	0.750	0.320	0.150	0.020
3261I04LH	100	2.50	70	0.080	0.850	0.360	0.200	0.020
3261I05LH	70	3.00	50	0.050	0.850	0.360	0.200	0.025
3261I06LH	40	4.00	30	0.025	0.850	0.360	0.200	0.032
3261I07LH	10	11.00	5	0.008	0.875	0.437	0.187	0.064
3261I08LH	25	5.50	12	0.014	0.875	0.437	0.187	0.040
3261I09LH	125	2.75	70	0.120	0.875	0.437	0.187	0.020
3261I10LH	275	2.00	150	0.240	0.875	0.437	0.187	0.016
3261I11LH	450	1.50	250	0.490	0.875	0.437	0.187	0.012
3261I12LH	25	9.00	15	0.012	1.125	0.562	0.312	0.064
3261I13LH	75	5.00	40	0.040	1.125	0.562	0.312	0.036
3261I14LH	400	2.25	225	0.330	1.125	0.562	0.312	0.018
3261I15LH	800	1.75	475	0.640	1.125	0.562	0.312	0.015
3261I16LH	1000	1.50	575	0.980	1.125	0.562	0.312	0.012
3261I17LH	50	9.50	25	0.012	1.350	0.635	0.375	0.064
3261I18LH	150	4.75	85	0.046	1.250	0.625	0.375	0.036
3261I19LH	700	2.25	400	0.420	1.250	0.625	0.375	0.018
3261I20LH	1250	1.75	750	0.850	1.250	0.625	0.375	0.015
3261I21LH	1600	1.50	950	1.270	1.250	0.625	0.375	0.012
3261I22LH	125	7.75	65	0.032	1.822	0.850	0.750	0.064
3261I23LH	500	4.00	275	0.150	1.822	0.850	0.750	0.032
3261I24LH	1100	2.50	650	0.330	1.822	0.850	0.750	0.025
3261I25LH	2250	1.75	1350	0.920	1.822	0.850	0.750	0.018
3261I26LH	4500	1.25	2700	2.640	1.822	0.850	0.750	0.012
3261I27LH	250	8.00	125	0.041	2.225	0.987	0.625	0.062
3261I28LH	900	3.75	500	0.175	2.225	0.987	0.625	0.032
3261I29LH	1800	2.50	1000	0.550	2.225	0.987	0.625	0.023
3261I30LH	4000	1.75	2100	1.160	2.225	0.987	0.625	0.018
3261I31LH	8000	1.00	4500	3.340	2.225	0.987	0.625	0.012

Note: LH – Internal control code.

B. Mechanical Dimensions: (Unit: Inch)



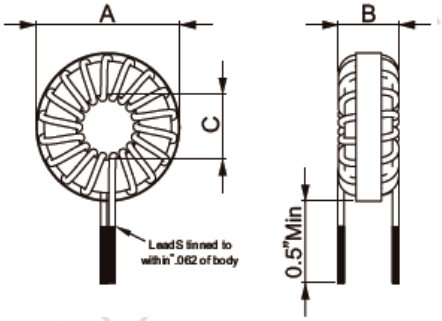

C. Applications:

1. Computers & Game Consoles
2. Set Top Boxes & Cables Modems
3. Mobile Communication Devices (Radios etc.)
4. LCD, DVD, BRP