I. Product Selection Guide 6

II. Product Specifications 9

III. Optional Products 69

IV. Tape and Reel Packaging Specifications 70

V. Panel Mounting Options 72

VI. Adjustment Tools 77

VII. Lab Design Kits 77

VIII. Mil-Spec Part Numbering 79

IX. Applications/Processing Guide 83

X. Soldering and Cleaning Processes 84

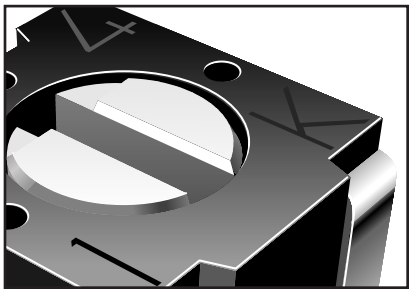

SMT Trimmers - Product Selection Guide

BOURNS®

Model Number	Element Technology		Number of Turns		Sealed Open		Size					Packaging Options	Adjust	Page No.
	Cermet	W/W	Single	Multi	Sealed	Open	2mm	3mm	4mm	5mm	1/4"	See Note 1	See Note 2	
3214*	•			•	•				•			E	T,S	12
3224*	•			•	•				•			E	T,S	14
3269*	•			•	•						•	G,T	T,S	22
3302	•		•			•	•					E	T	32
3303	•		•			•		•				E	T,B	34
3313*	•		•		•			•				E	T,S	39
3314	•		•		•				•			E,G,T	T,S	41
3324*	•		•		•				•			E	T	47
3364	•		•			•			•			E	T,B	56
3374*	•		•		•				•			E	T	58

NOTE 1: Standard packaging; some options may require alternate packaging. Consult factory.
T = Tube, B = Bulk, E = Embossed Tape - 7" Reel, G = Embossed Tape - 13" Reel

NOTE 2: T = Top Adjustment, S = Side Adjustment, B = Bottom Adjustment

*Indicates patented models.

Specifications are subject to change without notice.

Model Number	Element Technology		Number of Turns		Size						Packaging Options	Adjust	Page No.
	Cermet	WW	Single	Multi	1/4" Sq.	5/16" Sq.	3/8" Sq.	1/2"	3/4"	1-1/4"	See Note 1	See Note 2	
3005**		•		•					•		T	S	69
3006	•			•					•		T	S	9
3009**	•			•					•		T,B	S	69
3057		•		•						•	T,B	S	10
3059	•			•						•	T,B	S	11
3082**	•			•				•			T	S	69
3250		•		•				•			T,B	T,S	16
3252	•			•				•			T,B	T,S	17
3260		•		•	•						T	T,S	18
3262*	•			•	•						T	T,S	19
3266*	•			•	•						T,R	T,S	20
3266-LTC	•			•	•						T	T,S	21
3290		•		•			•				T,B	T,S	24
3292*	•			•			•				T,B	T,S	25
3296*	•			•			•				T,R	T,S	26
3296-LTC	•			•			•				T	T,S	27
3296-LC2*	•			•			•				T,B	T,S	29
3296-OT1*	•			•			•				T	T,S	30
3299*	•			•			•				T,B	T,S	31
3329	•		•		•						T,B,R	T,S	51
3339	•			•		•					T	T,S	52
3345**		•	•					•			B	T,S	69
3362	•		•		•						T,R	T,S	54
3386	•		•				•				T,B,R	T,S	59
3386-HV2	•		•				•				T	T,S	61
3386-HV3	•		•				•				T	T,S	61
3386-OT1	•		•				•				T,B	T	62

NOTE 1: Standard packaging; some options may require alternate packaging. Consult factory.
T = Tube, B = Bulk, R = Tape and Reel

NOTE 2: T = Top Adjustment, S = Side Adjustment

*Indicates patented models.

**Optional products (not recommended for new designs).

Open Frame Trimmers

BOURNS®

Model Number	Element Technology		Number of Turns		Mounting Type		Size						Packaging Options	Adjust	Page No.
	Cermet	Carbon	Single	Multi	SMT	Leaded	2mm	3mm	4mm	6mm	9mm	3/8"	See Note 1	See Note 2	
3302	•		•		•		•						E	T	32
3303	•		•		•			•					E	T,B	34
3306	•		•			•				•			B	T,S	36
3309	•		•			•					•		B	T,S,B	37
3318		•	•			•				•			B	T,S	44
3319		•	•			•					•		B	T,S,B	45
3328		•	•			•					•		B	T,S,B	49
3352	•		•			•						•	B	T,S	53
3364	•		•		•				•				E	T	56
TC76		•	•			•				•			B, T&R, A	T,S,B	65

Application Specific Products

Model Number	Element Technology		Number of Turns		Size						Packaging Options	Adjust	Page No.
	Cermet	WW	Single	Multi	1/4"	5/16"	3/8"	1/2"	3/4"	1-1/4"	See Note 1	See Note 2	
3266-LTC	•			•	•						T	T,S	21
3296-LTC	•			•			•				T	T,S	27
3296-LC2*	•			•			•				T	T,S	29
3296-OT1*	•			•			•				T	T,S	30
3386-HV2	•		•				•				T	T,S	61
3386-HV3	•		•				•				T	T,S	61
3386-OT1*	•		•				•				T,B	T	62

Military Products

Model Number	Element Technology		Turns		Size				Packaging Options	Adjust	Page No.
	Cermet	W/W	Single	Multi	1/4"	3/8"	1/2"	1-1/4"	See Note 1	See Note 2	
RJ 22	•			•			•		T,B	T,S	17
RJ/RJR 24*	•			•		•			T,B	T,S	28
RJ/RJR 26	•			•	•				T	T,S	19
RT/RTR 22		•		•			•		T,B	T,S	16
RT/RTR 24		•		•		•			T	T,S	24
RT 26		•		•	•				T	T,S	18

NOTE 1: Standard packaging; some options may require alternate packaging. Consult factory.
T = Tube, B = Bulk, E = Embossed Tape - 7" Reel, G = Embossed Tape - 13" Reel
T&R = Tape & Reel, A = Ammo Pak

NOTE 2: T = Top Adjustment, S = Side Adjustment, B = Bottom Adjustment

* Indicates patented models.

Specifications are subject to change without notice.

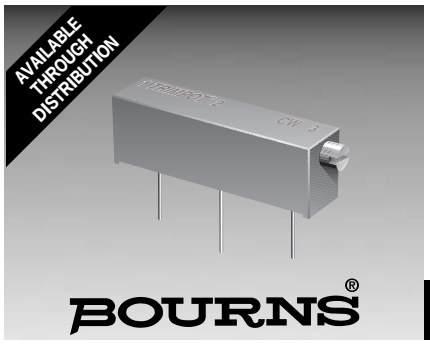

Features

- 3/4" Rectangular / Multiturn Cermet / Industrial / Sealed
- Low PC board profile - only 1/4" high
- Panel mount option available, (see page 72 for details)
- Transparent housing available, can be set visually without hook-up and instrumentation ("P" style only)

3006 - Trimpot® Trimming Potentiometer

Electrical Characteristics

Standard Resistance Range .....10 to 5 megohms (see standard resistance table)
Resistance Tolerance .....±10% std. (tighter tolerance available)
Absolute Minimum Resistance .....1.0% or 2 ohms max. (whichever is greater)
Contact Resistance Variation .....1.0% or 1 ohm max. (whichever is greater)
Adjustability
Voltage.....±0.01%
Resistance.....±0.05%
Resolution.....Infinite
Insulation Resistance .....500 vdc. 1,000 megohms min.
Dielectric Strength
Sea Level .....1,000 vac
80,000 Feet.....250 vac
Adjustment Angle .....15 turns nom.

Environmental Characteristics

Power Rating (400 volts max.)
70°C .....0.75 watt
125°C .....0 watt
Temperature Range.....-55°C to +125°C
Temperature Coefficient .....±100ppm/°C
Seal Test .....85°C Fluorinert*
Humidity.....MIL-STD-202 Method 103 96 hours (3% ΔTR, 20 Megohms IR)
Vibration.....20G (2% ΔTR; 2% ΔVR)
Shock.....50G (2% ΔTR; 2% ΔVR)
Load Life ....1,000 hours 0.75 watt 70°C (4% ΔTR)
Rotational Life.....200 cycles (3% ΔTR; 1% or 1 ohm, whichever is greater, CRV)

Physical Characteristics

Torque .....5.0 oz-in. max.
Mechanical Stops.....Wiper idles
Terminals .....Solderable pins
Weight .....0.04 oz.
Marking .....Manufacturer's trademark, resistance code, terminal numbers, date code, manufacturer's model number and style
Wiper Positioning .....50% nominal
Flammability .....U.L. 94V-0
Standard Packaging .....25 pcs. per tube
Adjustment Tool H-90

*"FLUORINERT" IS A REGISTERED TRADEMARK OF 3M CO.

Common Dimensions

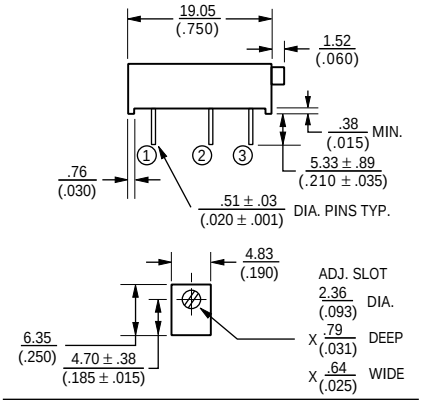

3006P

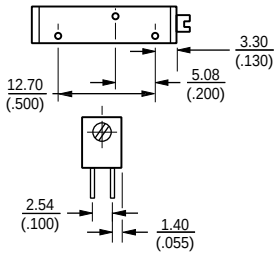

3006W

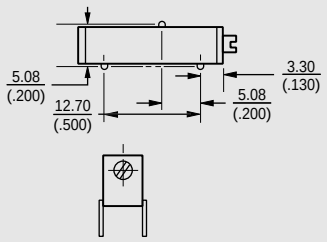

3006Y

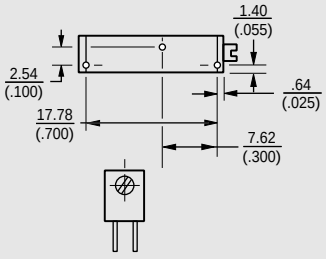

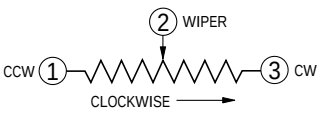

TOLERANCES: ± 0.25 (.010) EXCEPT WHERE NOTED

DIMENSIONS ARE: METRIC / (INCHES)

How To Order

3006 P - 1 - 103 Z

Model
Style
Standard or Modified Product Indicator
-1 = Standard Product
-7 = Transparent Housing
Resistance Code
Optional Suffix Letter
Z = Panel Mount (Factory Installed)

Consult factory for other available options.

Standard Resistance Table

Resistance (Ohms)	Resistance Code
10	100
20	200
50	500
100	101
200	201
500	**501**
1,000	**102**
2,000	**202**
5,000	**502**
10,000	**103**
20,000	**203**
25,000	**253**
50,000	**503**
100,000	**104**
200,000	**204**
250,000	254
500,000	504
1,000,000	105
2,000,000	205

Popular values listed in boldface. Special resistances available.

SHADED AREAS TYPICALLY NOT STOCKED BY DISTRIBUTORS AND NOT RECOMMENDED FOR NEW DESIGNS.

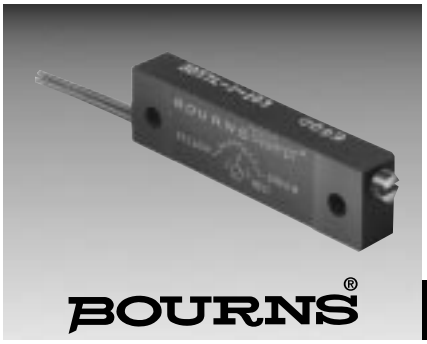

Features

- 1-1/4" Rectangular / Multiturn Wirewound / Industrial / Sealed
- Panel mount option available (see page 72 for details)

3057 - Trimpot® Trimming Potentiometer

Electrical Characteristics

Standard Resistance Range .....10 to 50K ohms (see standard resistance table)
Resistance Tolerance .....±5% std. (tighter tolerance available)
Absolute Minimum Resistance .....0.1% or 1 ohm max. (whichever is greater)
Noise .....100 ohms ENR max.
Resolution .....See Resistance Table
Insulation Resistance .....500 vdc. 1,000 megohms min.
Dielectric Strength
Sea Level .....1,500 vac
70,000 Feet .....400 vac
Adjustment Travel .....22 turns nom.

Environmental Characteristics

Power Rating @ 70°C .....1 watt
Power Rating @ 150°C .....0 watt
Temperature Range .....-55°C to +150°C
Temperature Coefficient .....±50ppm/°C
Seal Test .....85°C Fluorinert* (pin styles only)
Humidity .....MIL-STD-202 Method 106 96 hours 2% ΔTR, 100 Megohms IR)
Vibration .....30G (1% ΔTR; 0.5% + resolution ΔVR)
Shock .....100G (1% ΔTR; 0.5% + resolution ΔVR)
Load Life .....1,000 hours 1 watt @ 70°C (2% ΔTR)
Rotational Life .....200 cycles (2% ΔTR)

Physical Characteristics

Torque .....5.0 oz-in. max.
Mechanical Stops .....Wiper idles
Terminals .....Solderable pins and lugs
Flexible leads .....(7 strands of 30 AWG)
Weight .....0.10 oz.
Marking .....Manufacturer's trademark, resistance code, terminal numbers, date code, manufacturer's model number and style
Wiper .....Set at CW end
Flammability .....U.L. 94V-0
Standard Packaging
P&Y Style .....10 pcs. per tube
L&J Style .....25 pcs. per bag
Adjustment Tool H-90

*"FLUORINERT" IS A REGISTERED TRADEMARK OF 3M CO.

3057L
Common Dimensions

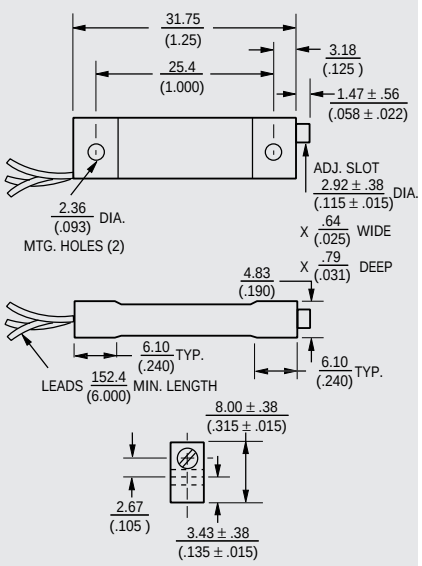

3057J

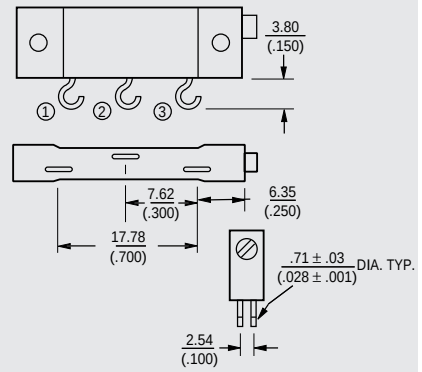

3057P

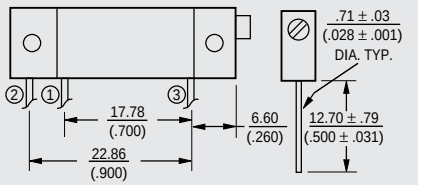

How To Order

3057 L - 1 - 103 M

Model
Style
Standard or Modified Product Indicator
-1 = Standard Product
Resistance Code
Optional Suffix Letter
M = Panel Mount (Factory Installed)

3057Y

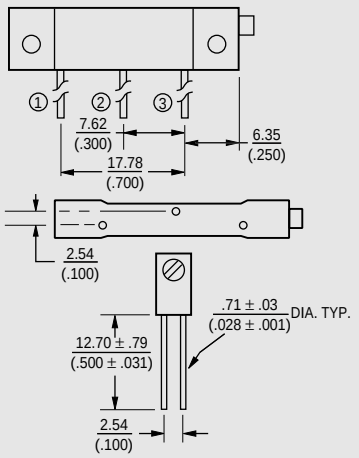

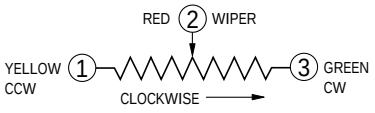

TOLERANCES: ± 0.25 (.010) EXCEPT WHERE NOTED

DIMENSIONS ARE: METRIC / (INCHES)

Standard Resistance Table

Resistance (Ohms)	Resistance Code	Nominal Resolution (Percent)
10	100	2.40
20	200	1.90
50	500	1.40
100	101	1.00
200	201	0.86
500	501	0.89
1,000	102	0.72
2,000	202	0.58
5,000	502	0.43
10,000	103	0.34
20,000	203	0.31
50,000	503	0.24

Popular values listed in boldface. Special resistances available.

SHADED AREAS TYPICALLY NOT STOCKED BY DISTRIBUTORS AND NOT RECOMMENDED FOR NEW DESIGNS.

Specifications are subject to change without notice.

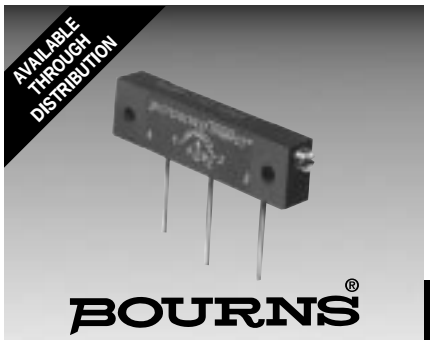

Features

- 1-1/4" Rectangular / Multiturn Cermet / Industrial / Sealed
- Panel mount option available (see page 72 for details)

3059 - Trimpot® Trimming Potentiometer

Electrical Characteristics

Standard Resistance Range
.....10 to 2 megohms
(see standard resistance table)
Resistance Tolerance .....±10% std.
(tighter tolerance available)
Absolute Minimum Resistance
.....1% or 2 ohms max.
(whichever is greater)
Contact Resistance Variation
.....1.0% or 1 ohm max.
(whichever is greater)
Adjustability
Voltage.....±0.01%
Resistance.....±0.05%
Resolution.....Infinite
Insulation Resistance .....500 vdc.
1,000 megohms min.
Dielectric Strength
Sea Level .....900 vac
70,000 Feet.....350 vac
Effective Travel.....22 turns nom.

Environmental Characteristics

Power Rating @ 70°C (400 volts max.)
.....1.0 watt
Power Rating @ 150°C.....0 watt
Temperature Range.....-55°C to +150°C
Temperature Coefficient .....±100ppm/°C
Seal Test .....85°C Fluorinert*
(pin styles only)
Humidity.....MIL-STD-202 Method 106
(2% ΔTR, 10 Megohms IR)
Vibration.....20G (1% ΔTR; 1% ΔVR)
Shock.....50G (1% ΔTR; 1% ΔVR)
Load Life ..1,000 hours 1.0 watt @ 70°C
(3% ΔTR; 1% or 1 ohms,
whichever is greater, CRV)
Rotational Life.....200 cycles
(2% ΔTR; 1% or 1 ohm,
whichever is greater, CRV)

Physical Characteristics

Torque .....5.0 oz-in. max.
Mechanical Stops.....Wiper idles
Terminals .Solderable printed circuit pins
Flexible leads .....(7 strands of 30 AWG)
Weight .....0.1 oz.
Marking .....Manufacturer's trademark,
.....resistance code, terminal
....numbers, date code, manufacturer's
..... model number and style
Wiper .....Set at CW end
Flammability.....U.L. 94V-0
Standard Packaging
P&Y Styles .....10 pcs. per tube
L&J Styles .....25 pcs. per bag
Adjustment Tool H-90

*"FLUORINERT" IS A REGISTERED TRADEMARK OF 3M CO.

3059L
Common Dimensions

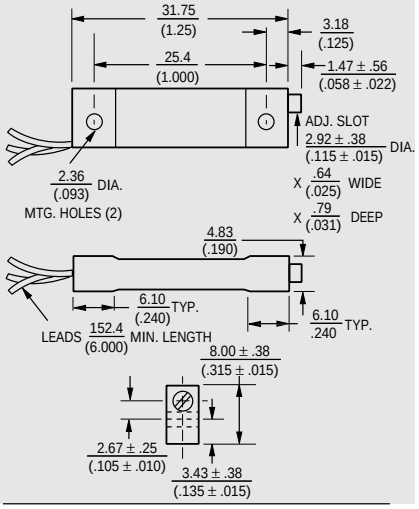

3059J

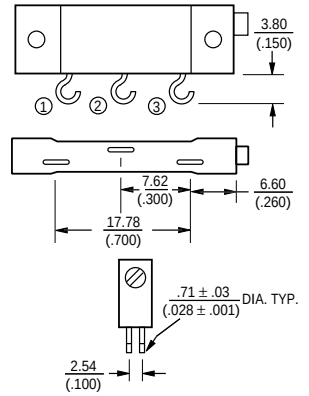

3059P

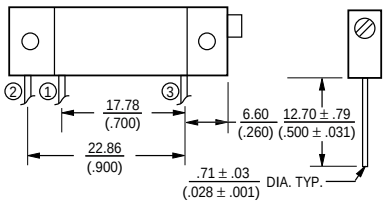

How To Order

3059 L - 1 - 103 M

Model
Style
Standard or Modified Product Indicator
-1 = Standard Product
Resistance Code
Optional Suffix Letter
M = Panel Mount (Factory Installed)

3059Y

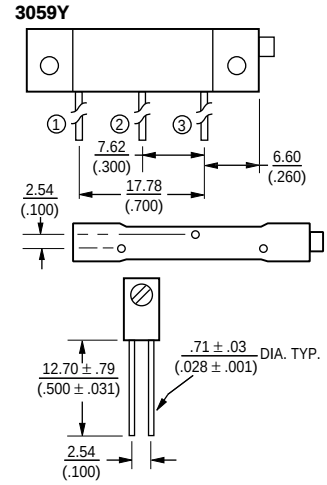

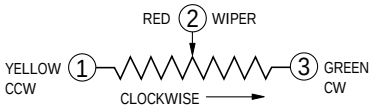

TOLERANCES: ± 0.25 (.010) EXCEPT WHERE NOTED

DIMENSIONS ARE: METRIC / (INCHES)

Standard Resistance Table

Resistance (Ohms)	Resistance Code
10	100
20	200
50	500
100	101
200	201
500	501
1,000	**102**
2,000	**202**
5,000	**502**
10,000	**103**
20,000	**203**
25,000	253
50,000	503
100,000	104
200,000	204
250,000	254
500,000	504
1,000,000	105
2,000,000	205

Popular values listed in boldface. Special resistances available.

SHADED AREAS TYPICALLY NOT STOCKED BY DISTRIBUTORS AND NOT RECOMMENDED FOR NEW DESIGNS.



Features

- Surface Mount 4mm Square / Multiturn Cermet / Industrial / Sealed
- Sealed to withstand board wash processing
- Pick and place centering design, with flush adjustment
- 4mm design meets EIA/EIAJ/IPC/VRCI SMD standard trimmer footprint
- Top and side adjust styles
- J-hook, and gull-wing
- Patent #5047746 advanced drive/wiper mechanism

3214 - 5-Turn Trimming Potentiometer

Electrical Characteristics

Standard Resistance Range
.....10 to 2 megohm
(see standard resistance table)
Resistance Tolerance .....±10% std.
Absolute Minimum Resistance
.....1% or 2.0 ohms
(whichever is greater)
Contact Resistance Variation
.....3% or 3 ohms max.
Resolution.....Essentially Infinite
Insulation Resistance .....500 vdc.
100 megohms min.
Dielectric Strength
Sea Level .....600 vac (1minute)
Adjustment Angle .....5 turns nom.

Environmental Characteristics

Power Rating (300 volts max.)
85°C .....0.25 watt
150°C .....0 watt
Temperature Range.....-65°C to +150°C
Temperature Coefficient .....±100ppm/°C
Humidity .....MIL-STD 202 Method 106
TRS ±2%; IR 10 megohms
Vibration.....20G TRS±1%; VRS ±1%
Shock.....100G TRS ±1%; VRS±1%
Load Life
.....@ 85°C rated power 1,000 hours
TRS 3 ohms or 3%
(whichever is greater)
Rotational Cycling.....200 cycles
TRS 3 ohms or 3%
(whichever is greater)
Thermal Shock.....5 cycles
TRS±2%; VRS±1%

Physical Characteristics

Mechanical Stop .....Wiper idles
Torque.....180g-cm max.
Weight .....Approximately 0.01 oz.
Marking .....Manufacturer's code,
resistance code and date code
Solderability .....Per MIL-STD-202,
Method 208
Wiper .....Set at 50% nominal
Flammability UL94V0
Pushover Strength ..2 Kilograms (4.4lbs)
Adjustment Tool H-91

3214G Side Adjust

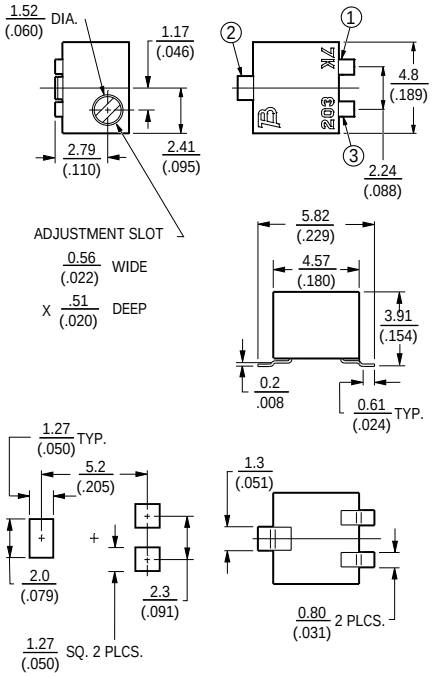

3214J Side Adjust

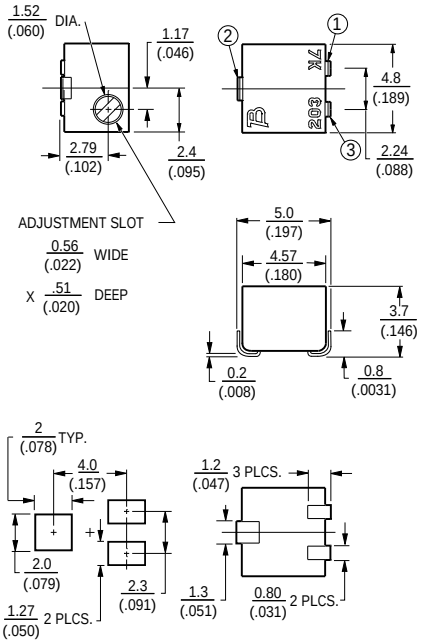

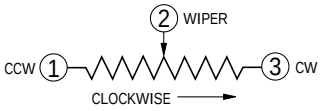

TOLERANCES: ± 0.25 (.010) EXCEPT WHERE NOTED

DIMENSIONS ARE: METRIC / (INCHES)

3214W Top Adjust

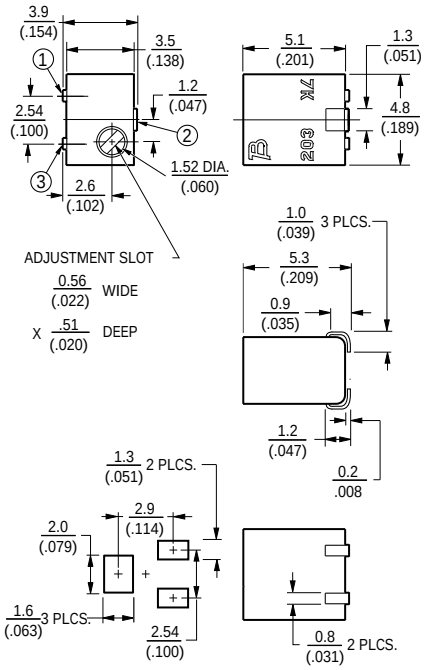

How To Order

3214 J - 1 - 502 E

Model
Style
Standard or Modified Product Indicator
-1 = Standard Product - IR Reflow
* -2 = Wave Solderable
Resistance Code
Embossed Tape Designator
Style J, G: 500 pcs./7" reel (standard)
Style W: 250 pcs./7" reel (standard)

Consult factory for other available options.
* -2 has a treated stainless steel shaft

Specifications are subject to change without notice.

Packaging Specifications
(J & G Styles)

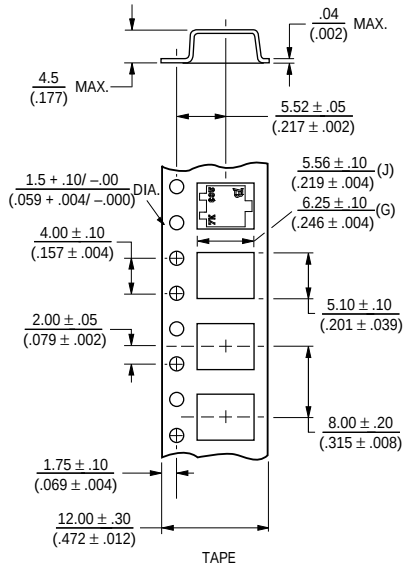

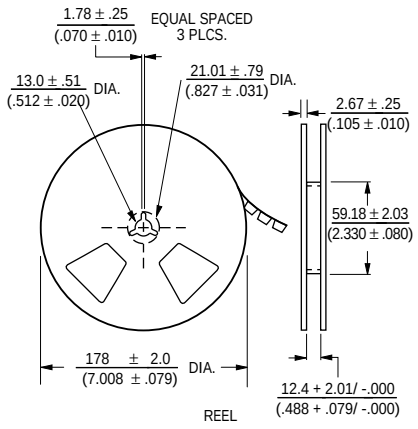

Cover tape peel strength:
Meets EIA specification 481.

Units packaged 500 pieces per reel.

Packaging Specifications
(W Style)

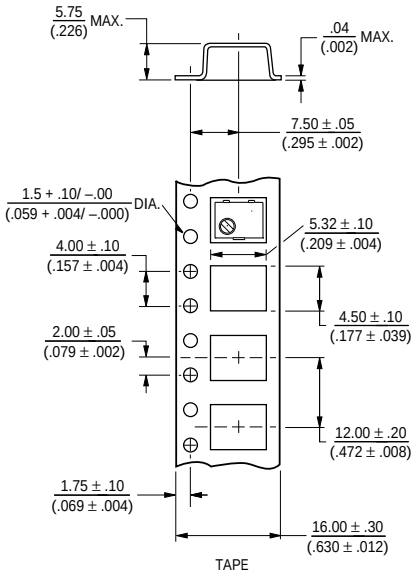

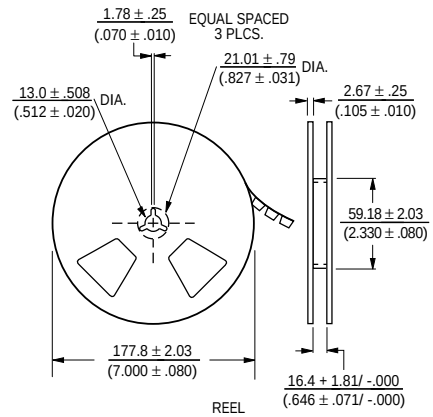

Cover tape peel strength:
Meets EIA specification 481.

Units packaged 250 pieces per reel.

Standard Resistance Table

Resistance (Ohms)	Resistance Code
10	100
20	200
50	500
100	**101**
200	**201**
500	**501**
1,000	**102**
2,000	**202**
5,000	**502**
10,000	**103**
20,000	**203**
50,000	**503**
100,000	**104**
200,000	204
500,000	504
1,000,000	105
2,000,000	205

Popular values listed in boldface. Special resistances available.

SHADED AREAS TYPICALLY NOT STOCKED BY DISTRIBUTORS AND NOT RECOMMENDED FOR NEW DESIGNS.



Features

- Surface Mount 4mm Square / Multiturn Cermet / Industrial / Sealed
- Sealed to withstand board wash processing
- Pick and place centering design, with flush adjustment
- 4mm design meets EIA/EIAJ/IPC/VRCI SMD standard trimmer footprint
- Low CRV - 1%
- DESC selected material drawing #92021

3224 - 4mm SMD Trimming Potentiometer

Electrical Characteristics

Standard Resistance Range
.....10 to 2 megohm
(see standard resistance table)
Resistance Tolerance .....±10% std.
Absolute Minimum Resistance
.....1% or 2.0 ohms
(whichever is greater)
Contact Resistance Variation
.....1% or 3 ohms max.
Resolution.....Essentially Infinite
Insulation Resistance .....500 vdc.
100 megohms min.
Dielectric Strength
Sea Level .....600 vac (1minute)
Adjustment Angle .....11 turns nom.

Environmental Characteristics

Power Rating (300 volts max.)
85°C .....0.25 watt
150°C .....0 watt
Temperature Range.....-65°C to +150°C
Temperature Coefficient .....±100ppm/°C
Humidity .....MIL-STD 202 Method 106
TRS ±2%; IR 10 megohms
Vibration.....20G TRS±1%; VRS ±1%
Shock.....100G TRS ±1%; VRS±1%
Load Life
.....@ 85°C rated power 1,000 hours
TRS 3 ohms or 3% (whichever is greater)
Rotational Cycling.....200 cycles
TRS 3 ohms or 3% (whichever is greater)
Thermal Shock.....5 cycles
TRS±2%; VRS±1%

Physical Characteristics

Mechanical Stop .....Wiper idles
Torque .....180g-cm max.
Weight .....Approximately 0.01 oz.
Marking .....Manufacturer's code,
resistance code and date code
Solderability .....Per MIL-STD-202,
Method 208
Wiper .....Set at 50% nominal
Flammability UL94V0
Adjustment Tool H-91

How To Order

3224 J - 1 - 502 E

Model
Style
Standard or Modified Product Indicator
-1 = Standard Product - IR Reflow
* -2 = Wave Solderable
-FW5 = .070" ± .010" Shaft Extension
Resistance Code
Embossed Tape Designator
Style J, G: 500 pcs./7" reel (standard)
Style W: 250 pcs./7" reel (standard)
Consult factory for other available options.
* -2 has a treated stainless steel shaft

3224J Side Adjust

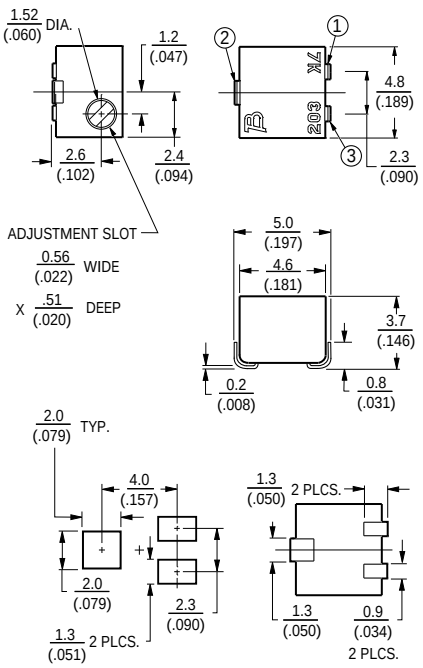

3224G Side Adjust

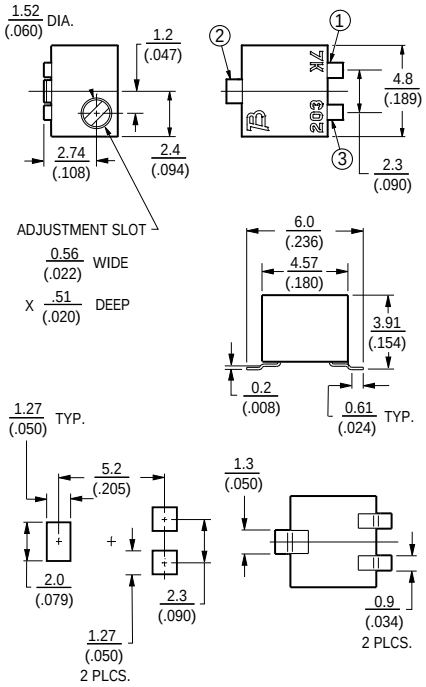

3224W Top Adjust

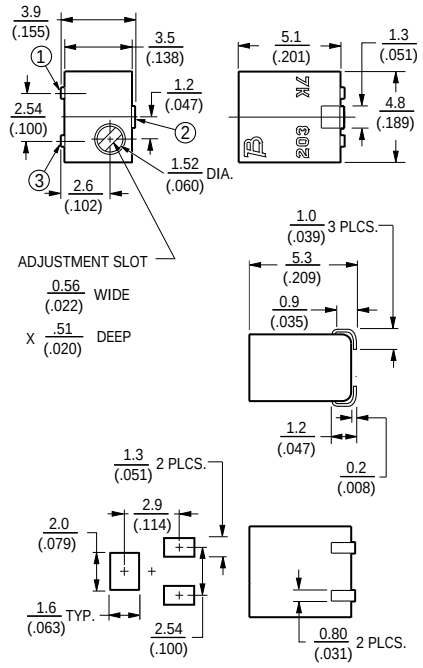

3224X Top Adjust

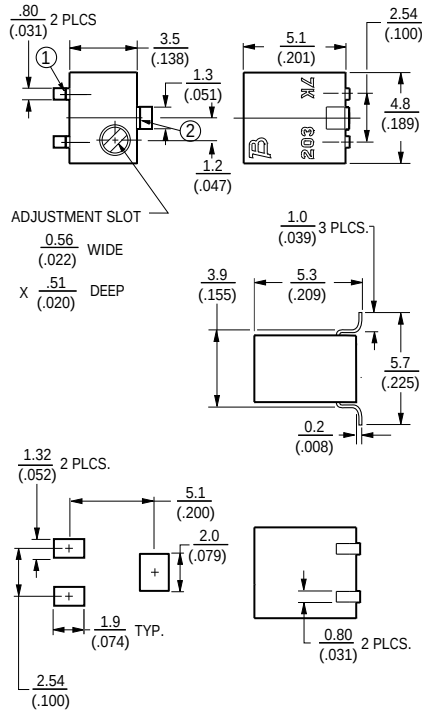

Specifications are subject to change without notice.

Additional Features

- Top and side adjust styles
- J-hook, and gull-wing
- Patent #5047746 advanced drive/wiper mechanism

3224 - Packaging Specifications

BOURNS®

J & G Styles

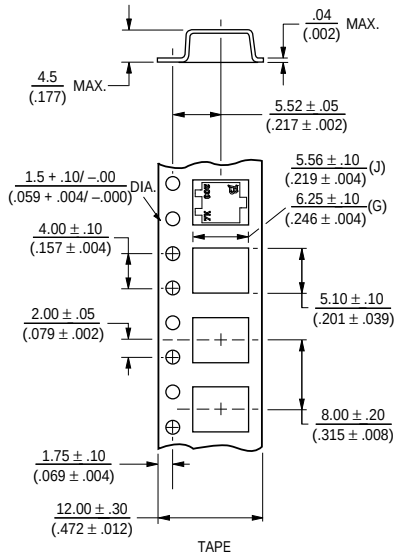

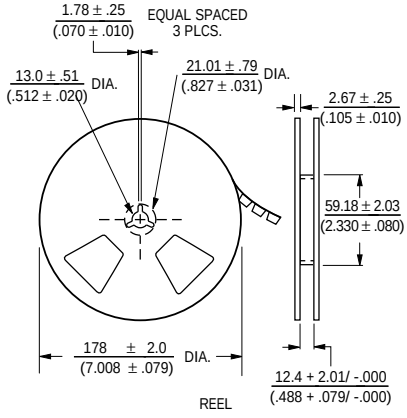

Cover tape peel strength:
Meets EIA specification 481.

Units packaged 500 pieces per reel.

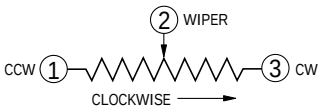

W Style

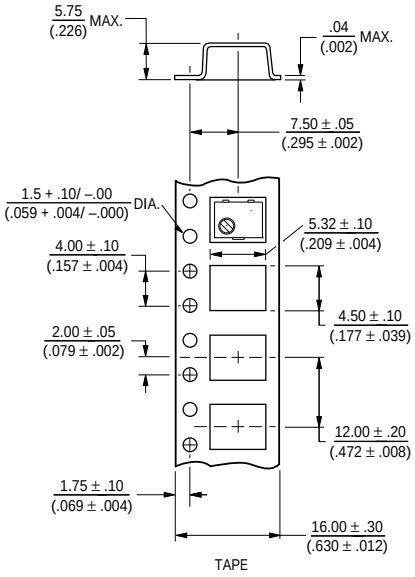

W & X Style Reel

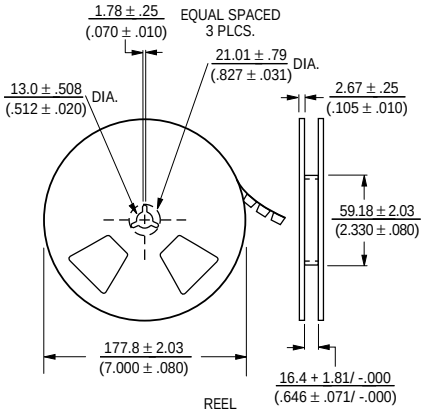

Cover tape peel strength:
Meets EIA specification 481.

Units packaged 250 pieces per reel. (w)
Units packaged 200 pieces per reel. (x)

TOLERANCES: ± 0.25 (.010) EXCEPT WHERE NOTED

DIMENSIONS ARE: METRIC / (INCHES)

X Style

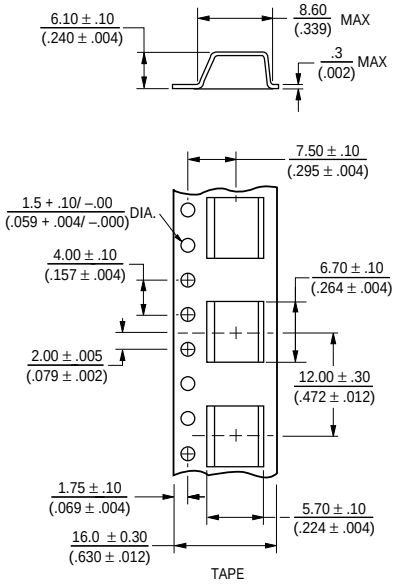

Standard Resistance Table

Resistance (Ohms)	Resistance Code
10	100
20	200
50	500
100	**101**
200	**201**
500	**501**
1,000	**102**
2,000	**202**
5,000	**502**
10,000	**103**
20,000	**203**
50,000	**503**
100,000	**104**
200,000	204
500,000	504
1,000,000	105
2,000,000	205

Popular values listed in boldface. Special resistances available.

SHADED AREAS TYPICALLY NOT STOCKED BY DISTRIBUTORS AND NOT RECOMMENDED FOR NEW DESIGNS.

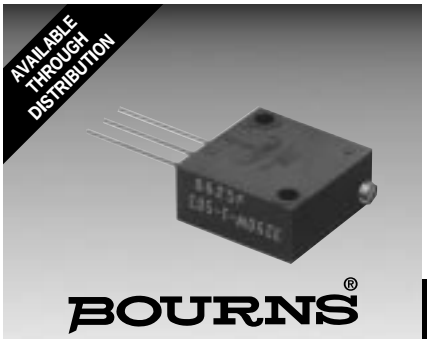

Features

- Multiturn / Wirewound / Sealed
- Listed on the QPL for style RT22 per MIL-R-27208 and RTR22 per High-Rel MIL-R-39015
- Panel Mount option available (see page 73 for details)

3250/RT22/RTR22 - 1/2" Square Trimming Potentiometer

Electrical Characteristics

Standard Resistance Range
- 3250 .....10 to 50K ohms
- RT22.....50 to 20K ohms
- RTR22 .....500 to 20K ohms

(see standard resistance table)

Resistance Tolerance.....±5% std.
(tighter tolerance available)

Absolute Minimum Resistance
.....0.1% or 1 ohm max. (whichever is greater)

Noise.....100 ohms ENR max.

Resolution .....See Resistance Table

Insulation Resistance.....500 vdc.
1,000 megohms min.

Dielectric Strength
- Sea Level.....1,000 vac
- 80,000 Feet .....400 vac

Adjustment Travel.....25 turns nom.

Environmental Characteristics

Power Rating @ 85°C
- 3250.....1.0 watt
- RT22/RTR22 .....0.75 watt

Power Rating @ 150°C .....0 watt

Temperature Range.....-65°C to +150°C

Temperature Coefficient
- 3250 .....±50ppm/°C
- RT22/RTR22.....±50ppm/°C

Seal Test .....85°C Fluorinert* (pin styles only)

Humidity .....MIL-STD-202 Method 106
- 3250 .....(2% ΔTR; 100 Megohms IR)
- RT22.....(1% ΔTR; 10 Megohms IR)
- RTR22 .....(1% ΔTR; 100 Megohms IR)

Vibration 30G
(1% ΔTR; 0.5% + resolution ΔVR)

Shock 100G
(1% ΔTR; 0.5% + resolution ΔVR)

Load Life
- 3250.....1,000 hours 1.0 watt @ 85°C
(2% ΔTR; 500 ohms ENR)
- RT22 .....1,000 hours 0.75 watt @ 85°C
(2% ΔTR; 2% + resolution ΔVR)
- RTR22.....10,000 hours 0.75 watt @ 85°C
(3% ΔTR; 2% + resolution ΔTR)

Rotational Life.....200 cycles
- 3250 .....(2% ΔTR; 500 ohms ENR)
- RT22/RTR22 .....(2% ΔTR)

Physical Characteristics

Torque .....5.0 oz-in. max.

Mechanical Stops .....Wiper idles

Terminals
- 3250.....Solderable printed circuit pins
Flexible leads (7 strands of 30 AWG)
- RT22/RTR22 .....MIL-STD-202; Method 208

Weight .....0.06 oz.

Machine Screw Mounting
- Torque .....12 oz-in. max.

Marking
- 3250.....Manufacturer's trademark, resistance code, terminal numbers, date code, manufacturer's model number and style
- RT22/RTR22 .....Mil-spec part number

Wiper .....Set at CW end

Flammability.....U.L. 94V-0

Standard Packaging
- P&W Styles.....25 pcs. per tube
- L Style.....25 pcs. per bag

Adjustment Tool H-90

3250P/RT22/RTR22 Common Dimensions (Pin Styles)

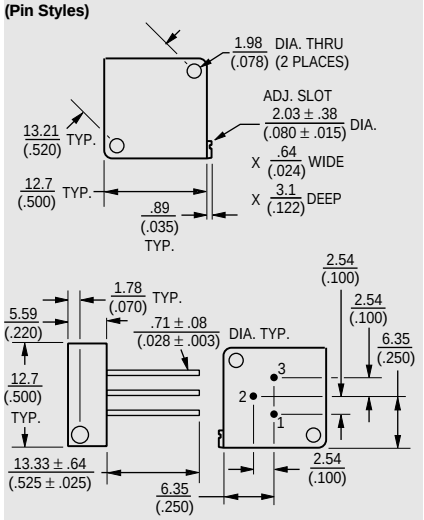

3250W/RT22/RTR22

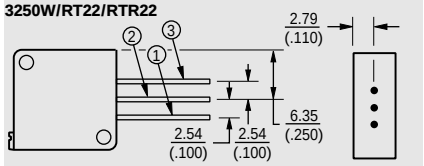

3250W-66/RT22X/RTR22X

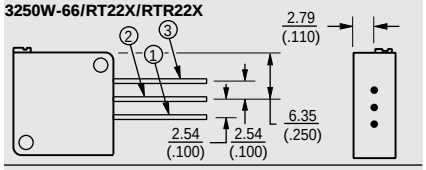

"L" Flex Lead Type
RT22 has mounting slots
RTR22 has mounting holes

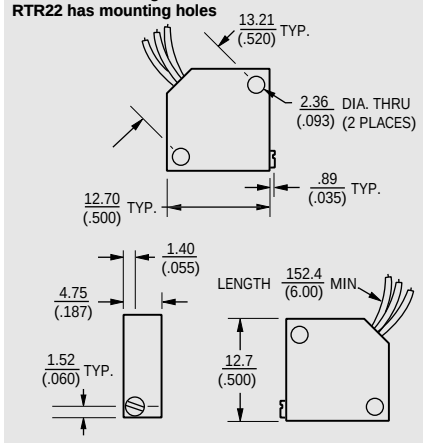

TOLERANCES: ± 0.25 (.010) EXCEPT WHERE NOTED

DIMENSIONS ARE: METRIC / (INCHES)

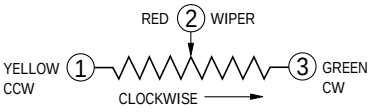

How To Order

3250 L - 1 - 103 M

- Model
- Style
- Standard or Modified Product Indicator
  - -1 = Standard Product
- Resistance Code
- Optional Suffix Letter
  - M = Panel Mount (Factory Installed)

See page 80 for RT22/RTR22 ordering information.

Consult factory for other available options.

Standard Resistance Table

Resistance (Ohms)	Nominal Resistance Code	Resolution (Percent)
10	100	1.30
20	200	1.00
50	500	0.80
100	**101**	**0.90**
200	**201**	**0.70**
500	**501**	**0.60**
1,000	**102**	**0.40**
2,000	**202**	**0.30**
5,000	**502**	**0.25**
10,000	**103**	**0.19**
20,000	**203**	**0.16**
25,000	253	0.14
50,000	503	0.13

Popular values listed in boldface. Special resistances available.

SHADED AREAS TYPICALLY NOT STOCKED BY DISTRIBUTORS AND NOT RECOMMENDED FOR NEW DESIGNS.

*"FLUORINERT" IS A REGISTERED TRADEMARK OF 3M CO.

Specifications are subject to change without notice.

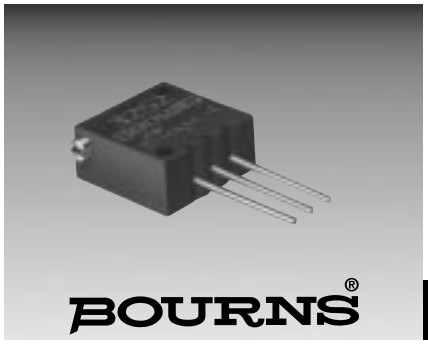

Features

- Multiturn / Cermet / Sealed
- Listed on the QPL for style RJ22 per MIL-R-22097
- Panel mount option available (see page 73 for details)

3252/RJ22 - 1/2" Square Trimming Potentiometer

Electrical Characteristics

Standard Resistance Range
- 3252 .....10 to 2 megohms
- RJ22.....10 to 1 megohm (see standard resistance table)

Resistance Tolerance .....±10% std.
.....(tighter tolerance available)

Absolute Minimum Resistance
- 3252.....1% or 2 ohms max. (whichever is greater)
- RJ22 .....1 ohm max.

Contact Resistance Variation
- 3252.....1% or 2 ohms max. (whichever is greater)
- RJ22 .....2% or 2 ohms max. (whichever is greater)

Adjustability
- Voltage.....±0.01%
- Resistance.....±0.05%

Resolution.....Infinite
Insulation Resistance .....500 vdc. 1,000 megohms min.

Dielectric Strength
- Sea Level.....1,000 vac
- 80,000 Feet.....400 vac

Effective Travel.....25 turns nom.

Environmental Characteristics

Power Rating @ 85°C (400 volts max.)
- 3252 .....0.75 watt
- RJ22 .....0.50 watt

Power Rating @ 150°C.....0 watt
Temperature Range .....-65°C to +150°C
Temperature Coefficient .....±100ppm/°C
Seal Test .....85°C Fluorinert* (pin styles only)

Humidity
- 3252 .....MIL-STD-202 Method 103; 96 hours (1% ΔTR; 100 Megohms IR)
- RJ22.....MIL-STD-202 Method 106 (1% ΔTR; 10 Megohms IR)

Vibration
- 3252 .....30G (1% ΔTR; 1% ΔVR)
- RJ22.....20G (1% ΔTR; 1% ΔVR)

Shock.....100G (1% ΔTR; 1% ΔVR)

Load Life
- 3252 .....1,000 hours 0.75 watt @ 85°C (3% ΔTR; 3% or 3 ohms, whichever is greater, CRV)
- RJ22 .....1,000 hours 0.5 watt @ 85°C (2% ΔTR; 1%ΔVR)

Rotational Life.....200 cycles
- 3252 .....(2% ΔTR; 3% or 3 ohms, whichever is greater, CRV)
- RJ22.....2% ΔTR

Physical Characteristics

Torque.....5.0 oz-in. max.
Mechanical Stops.....Wiper idles
Terminals
- 3252 .....Solderable printed circuit pins
- RJ22.....MIL-STD-202; Method 208

Flexible leads .....(7 strands of 30 AWG)
Weight .....0.065 oz.
Wiper .....Set at CW end
Flammability.....U.L. 94V-0

Machine Screw Mounting

Torque.....12 oz-in. max.
Marking
- 3252 .....Manufacturer's trademark, resistance code, wiring diagram, date code, manufacturer's model number and style
- RJ22 .....Mil-spec part number

Standard Packaging
- X, P&W Styles .....25 pcs. per tube
- L Style .....25 pcs. per bag

Adjustment Tool H-90

How To Order

3252 L - 1 - 103 M

- Model
- Style
- Standard or Modified Product Indicator
  - -1 = Standard Product
- Resistance Code
- Optional Suffix Letter
  - M = Panel Mount (Factory Installed)

See page 81 for RJ22 ordering information.
Consult factory for other available options.

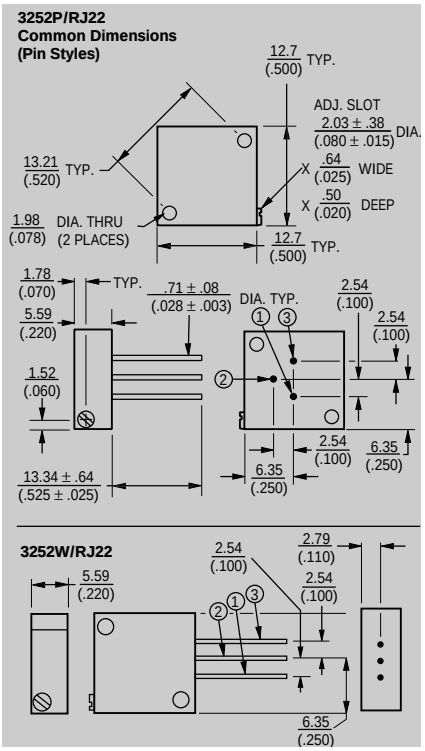

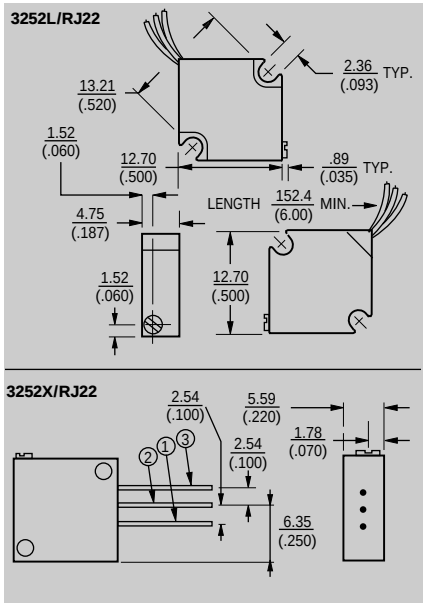

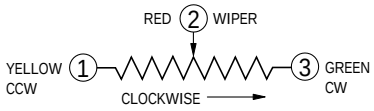

TOLERANCES: ± 0.25 (.010) EXCEPT WHERE NOTED

DIMENSIONS ARE: METRIC / (INCHES)

Standard Resistance Table

Resistance (Ohms)	Resistance Code
10	100
20	200
50	500
100	101
200	201
500	501
1,000	102
2,000	202
5,000	502
10,000	103
20,000	203
25,000	253
50,000	503
100,000	104
200,000	204
500,000	504
1,000,000	105
2,000,000	205

Popular values listed in boldface. Special resistances available.

SHADED AREAS TYPICALLY NOT STOCKED BY DISTRIBUTORS AND NOT RECOMMENDED FOR NEW DESIGNS.

*"FLUORINERT" IS A REGISTERED TRADEMARK OF 3M CO.

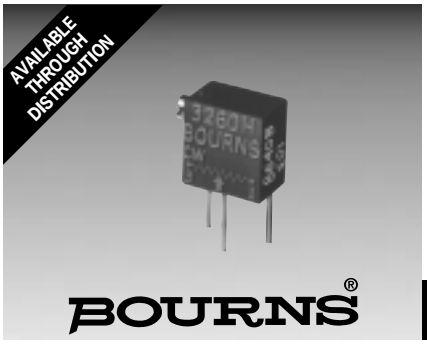

Features

- Multiturn / Wirewound / Industrial / Sealed
- Listed on the QPL for style RT26 per MIL-R-27208

3260/RT26 - 1/4" Square Trimming Potentiometer

Electrical Characteristics

Standard Resistance Range
- 3260 ..... 10 to 25K ohms
- RT26 ..... 10 to 5K ohms (see standard resistance table)

Resistance Tolerance ..... ±5% std. (tighter tolerance available)

Absolute Minimum Resistance
- 3260 ..... 0.1% or 1 ohm max. (whichever is greater)
- RT26 ..... 0.25% or 1 ohm max. (whichever is greater)

Noise ..... 100 ohms ENR max.

Resolution ..... See resistance table

Insulation Resistance ..... 500 vdc. ..... 1,000 megohms min.

Dielectric Strength
- Sea Level ..... 600 vac
- 80,000 Feet ..... 250 vac

Adjustment Angle ..... 11 turns nom.

Environmental Characteristics

Power Rating
- 85°C ..... 0.25 watt
- 150°C ..... 0 watt

Temperature Range
- 3260 ..... -65°C to +150°C
- RT26 ..... -55°C to +150°C

Temperature Coefficient
- 3260 ..... ±70ppm/°C
- RT26 ..... ±50ppm/°C

Seal Test ..... 85°C Fluorinert*

Humidity ..... MIL-STD-202 Method 106
- 3260 ..... (2% ΔTR, 100 Megohms IR)
- RT26 ..... (1% ΔTR, 10 Megohms IR)

Vibration
- 3260 ..... 30G (1% ΔTR; 1% + resolution ΔVR)
- RT26 ..... 20G (1% ΔTR; 1% + resolution ΔVR)

Shock ..... 100G (1% ΔTR; 1% + resolution ΔVR)

Load Life .... 1,000 hours 0.25 watt @ 85°C
- 3260 ..... (2% ΔTR; 500 ohms ENR)
- RT26 ..... (2% ΔTR; 2% + resolution ΔVR)

Rotational Life ..... 200 cycles
- 3260 ..... (2% ΔTR; 500 ohms ENR)
- RT26 ..... (2% ΔTR)

Physical Characteristics

Torque ..... 3.0 oz-in. max.

Mechanical Stops ..... Wiper idles

Terminals
- 3260 ..... Solderable printed circuit pins
- RT26 ..... MIL-STD-202; Method 208

Weight ..... 0.015 oz.

Marking
- 3260 ..... Manufacturer's trademark, resistance code, wiring diagram, date code, manufacturer's model number and style
- RT26 ..... Mil-spec part number

Wiper ..... Set at CW end

Flammability ..... UL 94V-0

Standard Packaging ..... 50 pcs. per tube

Adjustment Tool H-90

How To Order

3260 H - 1 - 502

- Model
- Style
- Standard or Modified Product Indicator
  -1 = Standard Product
- Resistance Code

See page 81 for RT26 ordering information.
Consult factory for other available options.

3260H/RT26 "X" Style Common Dimensions

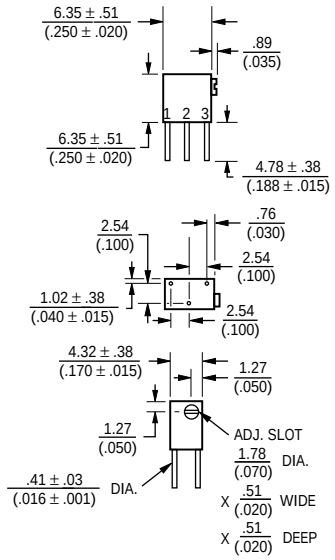

3260W/RT26

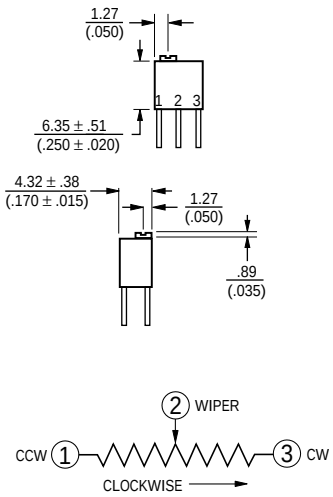

TOLERANCES: ± 0.25 (.010) EXCEPT WHERE NOTED

DIMENSIONS ARE: METRIC / (INCHES)

Standard Resistance Table

Resistance (Ohms)	Resistance Code	Nominal Resolution (Percent)
10	100	1.90
20	200	1.50
50	500	1.23
100	101	1.00
200	201	0.94
500	501	0.58
1,000	**102**	**0.50**
2,000	**202**	**0.45**
5,000	**502**	**0.34**
10,000	**103**	**0.29**
20,000	**203**	**0.28**
25,000	253	0.23

Popular values listed in boldface. Special resistances available.

SHADED AREAS TYPICALLY NOT STOCKED BY DISTRIBUTORS AND NOT RECOMMENDED FOR NEW DESIGNS.

*"FLUORINERT" IS A REGISTERED TRADEMARK OF 3M CO.

Specifications are subject to change without notice.

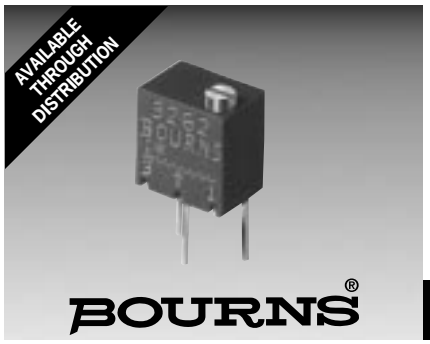

Features

- Multiturn / Cermet / Industrial / Sealed
- Listed on the QPL for style RJ26 per MIL-R-22097 and RJR26 per High-Rel MIL-R-39035
- Patent #4427966 drive mechanism

3262/RJ26/RJR26 - 1/4" Trimming Potentiometer

Electrical Characteristics

Standard Resistance Range
.....10 to 1 megohm (see standard resistance table)
Resistance Tolerance .....±10% std. (tighter tolerance available)
Absolute Minimum Resistance.....1% or 2 ohms max. (whichever is greater)
Contact Resistance Variation .....3.0% or 3 ohms max. (whichever is greater)
Adjustability
Voltage.....±0.02%
Resistance.....±0.05%
Resolution.....Infinite
Insulation Resistance .....500 vdc. 1,000 megohms min.
Dielectric Strength
Sea Level.....600 vac
80,000 Feet.....250 vac
Effective Travel.....12 turns nom.

Environmental Characteristics

Power Rating
(3262 300 volts max.; RJ26/RJR26 200 volts max.)
85°C .....0.25 watt
150°C .....0 watt
Temperature Range .....-65°C to +150°C
Temperature Coefficient .....±100ppm/°C
Seal Test .....85°C Fluorinert*
Humidity
3262 .....MIL-STD-202 Method 103 96 hours (2% ΔTR, 100 Megohms IR)
RJ26.....MIL-STD-202 Method 106 96 hours (1% ΔTR, 10 Megohms IR)
RJR26 .....MIL-STD-202 Method 106 96 hours (1% ΔTR, 100 Megohms IR)
Vibration
3262 .....30G (1% ΔTR; 1% ΔVR)
RJ26/RJR26.....20G (1% ΔTR; 1% ΔVR)
Shock.....100G (1% ΔTR; 1% ΔVR)
Load Life
3262 .....1,000 hours 0.25 watt @ 85°C (3% ΔTR; 3% or 3 ohms, whichever is greater, CRV)
RJ26 .....1,000 hours 0.25 watt @ 85°C (2% ΔTR; 1% ΔVR)
RJR26.....10,000 hours 0.25 watt @ 85°C (3% ΔTR)
Rotational Life .....200 cycles
3262 .....(2% ΔTR; 3% or 3 ohms, whichever is greater, CRV)
RJ26/RJR26.....(2% ΔTR)

Physical Characteristics

Torque.....3.0 oz-in. max.
Mechanical Stops.....Wiper idles
Terminals
3262 .....Solderable pins
RJ26/RJR26...MIL-STD-202; Method 208

*"FLUORINERT" IS A REGISTERED TRADEMARK OF 3M CO.

Physical Characteristics (cont.)

Weight .....0.015 oz.
Marking
3262 .....Manufacturer's trademark, resistance code, wiring diagram, date code, manufacturer's model number and style
RJ26/RJR26 .....Mil-spec part number
Wiper.....Positioned at 50% nominal
Flammability.....U.L. 94V-0
Standard Packaging .....50 pcs. per tube
Adjustment Tool H-90

How To Order

3262 P - 1 - 103

Model
Style
Standard or Modified Product Indicator
-1 = Standard Product
Resistance Code

See page 82 for RJ26/RJR26 ordering information.

Consult factory for other available options.

3262W/RJ26/RJR26
Common Dimensions

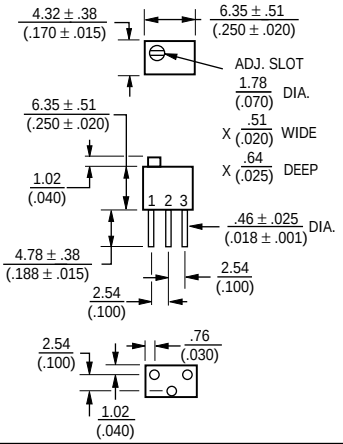

3262X/RJ26/RJR26

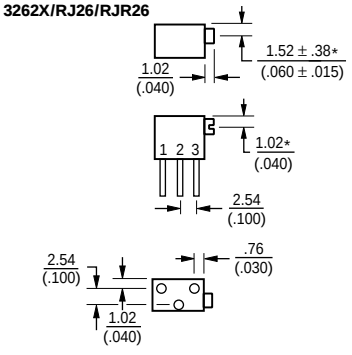

*Common dimensions

3262P/RJ26/RJR26

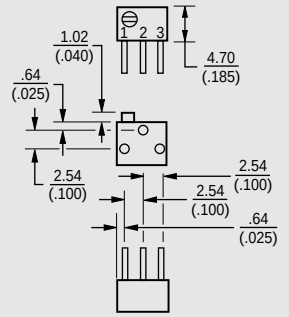

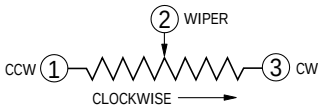

TOLERANCES: ± 0.25 (.010) EXCEPT WHERE NOTED

DIMENSIONS ARE: METRIC / (INCHES)

Standard Resistance Table

Resistance (Ohms)	Resistance Code
10	100
20	200
50	500
100	101
200	201
500	501
1,000	**102**
2,000	**202**
5,000	**502**
10,000	**103**
20,000	**203**
25,000	253
50,000	503
100,000	104
200,000	204
250,000	254
500,000	504
1,000,000	105

Popular values listed in boldface. Special resistances available.

SHADED AREAS TYPICALLY NOT STOCKED BY DISTRIBUTORS AND NOT RECOMMENDED FOR NEW DESIGNS.

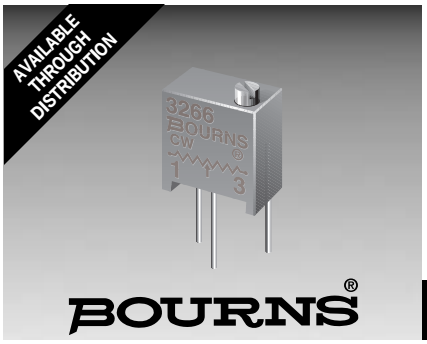

Features

- Multiturn / Cermet / Industrial / Sealed
- Standoffs allow thorough PC board washing
- Tape and reel packaging available (see page 70 for details)
- Patent #4427966 drive mechanism

3266 - 1/4" Square Trimming Potentiometer

Electrical Characteristics

Standard Resistance Range
.....10 to 1 megohm
(see standard resistance table)
Resistance Tolerance .....±10% std.
Absolute Minimum Resistance
.....1% or 2 ohms max.
(whichever is greater)
Contact Resistance Variation
.....3.0% or 3 ohms max.
(whichever is greater)
Adjustability
Voltage.....±0.02%
Resistance.....±0.05%
Resolution.....Infinite
Insulation Resistance .....500 vdc.
1,000 megohms min.
Dielectric Strength
Sea Level .....600 vac
80,000 Feet.....250 vac
Effective Travel.....12 turns nom.

Environmental Characteristics

Power Rating (300 volts max.)
70°C .....0.25 watt
150°C .....0 watt
Temperature Range.....-55°C to +150°C
Temperature Coefficient .....±100ppm/°C
Seal Test .....85°C Fluorinert*
Humidity.....MIL-STD-202 Method 103
96 hours (2% ΔTR, 10 Megohms IR)
Vibration.....30G (1% ΔTR; 1% ΔVR)
Shock.....100G (1% ΔTR; 1% ΔVR)
Load Life ....1,000 hours 0.25 watt 70°C
(3% ΔTR; 3% CRV)
Rotational Life.....200 cycles
(4% ΔTR; 3% or 3 ohms,
whichever is greater, CRV)

Physical Characteristics

Torque .....3.0 oz-in. max.
Mechanical Stops.....Wiper idles
Terminals .....Solderable pins
Weight .....0.015 oz.
Marking .....Manufacturer's
trademark, resistance code,
wiring diagram, date code,
manufacturer's model
number and style
Wiper .....Positioned at 50% nominal
Flammability.....U.L. 94V-0
Standard Packaging .....50 pcs. per tube
Adjustment Tool H-90

*"FLUORINERT" IS A REGISTERED TRADEMARK OF 3M CO.

3266W
Common Dimensions

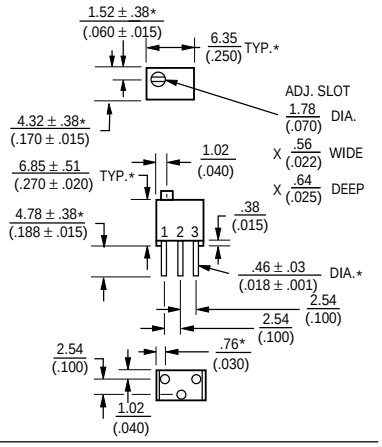

3266P

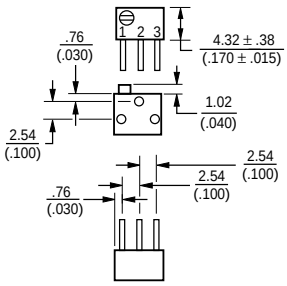

3266X

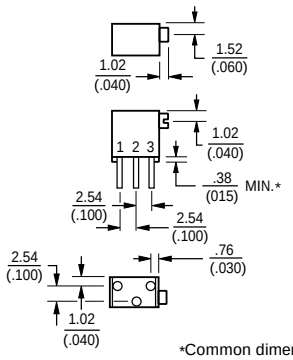

*Common dimensions

TOLERANCES: ± 0.25 (.010) EXCEPT WHERE NOTED

DIMENSIONS ARE: METRIC / (INCHES)

3266Y

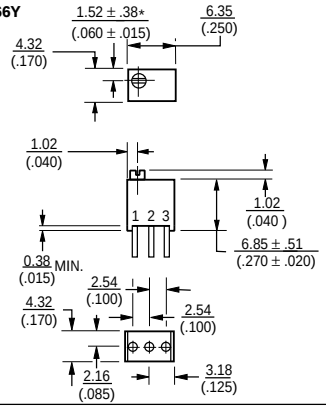

3266Z

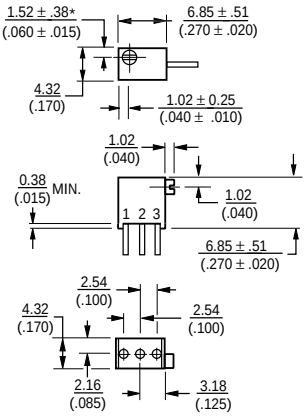

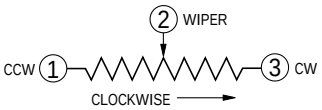

How to Order

3266 W - 1 - 103

Model
Style
Standard or Modified Product Indicator
-1 = Standard Product
Resistance Code

Consult factory for other available options.

Standard Resistance Table

Resistance (Ohms)	Resistance Code
10	100
20	200
50	500
100	101
200	201
500	501
1,000	**102**
2,000	**202**
5,000	**502**
10,000	**103**
20,000	**203**
25,000	253
50,000	503
100,000	104
200,000	204
250,000	254
500,000	504
1,000,000	105

Popular values listed in boldface. Special resistances available.

SHADED AREAS TYPICALLY NOT STOCKED BY DISTRIBUTORS AND NOT RECOMMENDED FOR NEW DESIGNS.

Specifications are subject to change without notice.

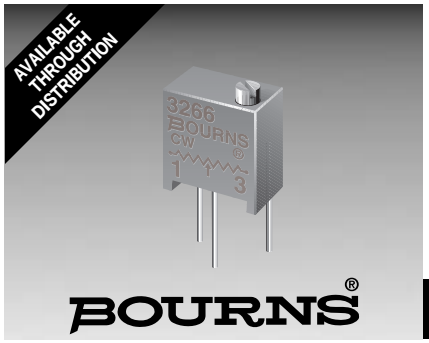

Features

- Low TCR
- Multiturn / Cermet / Industrial / Sealed
- Standoffs allow thorough PC board washing
- Patent #4427966 drive mechanism

Applications

- Rheostat applications with wiper currents less than 25 microamps
- Process control instrumentation
- Power supplies

3266-LTC - 1/4" Square Trimming Potentiometer

Electrical Characteristics

Standard Resistance Range
.....2K to 25K ohms
(see standard resistance table)
Resistance Tolerance .....±10% std.
Absolute Minimum Resistance
.....1% or 2 ohms max.
(whichever is greater)
Contact Resistance Variation
.....3.0% or 3 ohms max.
(whichever is greater)
Adjustability
Voltage.....±0.02%
Resistance.....±0.05%
Resolution.....Infinite
Insulation Resistance .....500 vdc.
1,000 megohms min.
Dielectric Strength
Sea Level .....600 vac
80,000 Feet.....250 vac
Effective Travel.....12 turns nom.

Environmental Characteristics

Power Rating (300 volts max.)
70°C .....0.25 watt
150°C .....0 watt
Temperature Range
.....-55°C to +150°C
Temperature Coefficient
End to End.....±20ppm/°C
Through the Wiper.....±50ppm/°C
Seal Test .....85°C Fluorinert*
Humidity.....MIL-STD-202 Method 103
96 hours (2% ΔTR, 10 Megohms IR)
Vibration.....30G (1% ΔTR; 1% ΔVR)
Shock.....100G (1% ΔTR; 1% ΔVR)
Load Life ....1,000 hours 0.25 watt 70°C
(3% ΔTR; 3% CRV)
Rotational Life.....200 cycles
(4% ΔTR; 3% or 3 ohms,
whichever is greater, CRV)

Physical Characteristics

Torque .....3.0 oz-in. max.
Mechanical Stops.....Wiper idles
Terminals .....Solderable pins
Weight .....0.015 oz.
Marking .....Manufacturer's
trademark, resistance code,
wiring diagram, date code,
manufacturer's model
number and style
Wiper .....Positioned at 50% nominal
Flammability.....U.L. 94V-0
Standard Packaging .....50 pcs. per tube
Adjustment Tool H-90

NOTE: TCR through the wiper applies when 40% or more of the resistance element is in the circuit.

*"FLUORINERT" IS A REGISTERED TRADEMARK OF 3M CO.

3266W
Common Dimensions

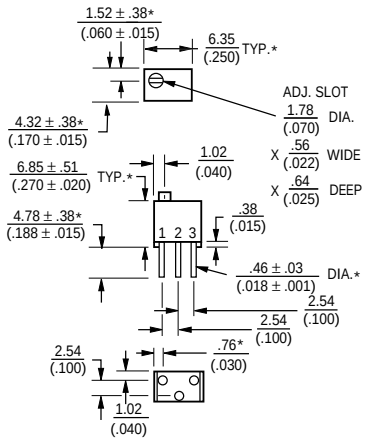

3266P

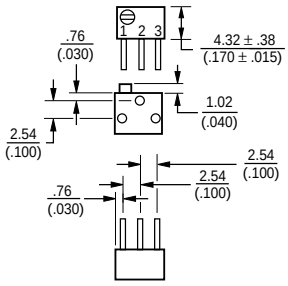

3266X

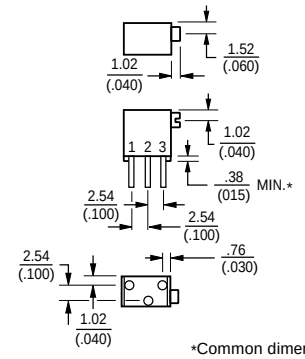

*Common dimensions

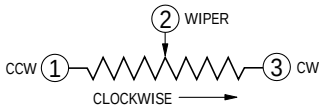

TOLERANCES: ± 0.25 (.010) EXCEPT WHERE NOTED

DIMENSIONS ARE: METRIC / (INCHES)

Standard Resistance Table

Resistance (Ohms)	Resistance Code
2,000	**202**
5,000	**502**
10,000	**103**
20,000	**203**
25,000	**253**

Popular values listed in boldface. Special resistances available.

How To Order

3266 W - LTC - 103

Model
Style
Product Indicator
Resistance Code

Consult factory for other available options.

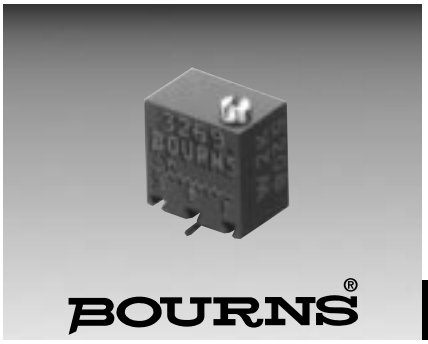

Features

- Stable, infinite resolution cermet element
- Vertical and horizontal adjust styles
- Optional packaging on embossed tape
- Compatible with surface mount manufacturing processes

3269 - 1/4" Square SMD Trimming Potentiometer

Electrical Characteristics

Standard Resistance Range
.....10 to 1 megohm
(see standard resistance table)
Resistance Tolerance .....±10% std.
(closer tolerance available)
Absolute Minimum Resistance
.....1% or 2 ohms max.
(whichever is greater)
Contact Resistance Variation
.....3.0% or 3 ohms max.
(whichever is greater)
Adjustability
Voltage.....±0.02%
Resistance .....±0.05%
Resolution.....Infinite
Insulation Resistance .....500 vdc.
1,000 megohms min.
Dielectric Strength
Sea Level .....600 vac
80,000 Feet.....250 vac
Effective Travel.....12 turns nom.

Environmental Characteristics

Maximum Exposure (Temp/Time)
..... +245°C/10 sec.
Power Rating (300 volts max.)
85°C .....0.25 watt
150°C .....0 watt
Temperature Range .....-65°C to +150°C
Temperature Coefficient .....±100ppm/°C
Seal Test .....85°C Fluorinert*
Humidity.....MIL-STD-202 Method 106
(2% ΔTR; IR 100 Megohms)
Vibration.....30G (1% ΔTR; 1% ΔVR)
Shock.....100G (1% ΔTR; 1% ΔVR)
Load Life...1,000 hours 0.25 watt @ 85°C
(3% ΔTR; 3% or 3 ohms
whichever is greater, CRV)
Rotational Life.....200 cycles
(2% ΔTR; 3% or 3 ohms,
whichever is greater, CRV)

Physical Characteristics

Torque .....3.0 oz-in. max.
Mechanical Stops.....Wiper idles
Terminals .....Solderable pins
Weight .....0.015 oz.
Marking .....Manufacturer's
trademark, resistance code,
wiring diagram, date code,
manufacturer's model
number and style
Standard Packaging .....50 pcs. per tube
Adjustment Tool H-90

*"FLUORINERT" IS A REGISTERED TRADEMARK OF 3M CO.

3269P
Common Dimensions

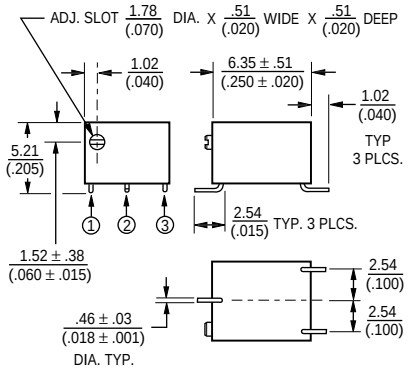

3269W

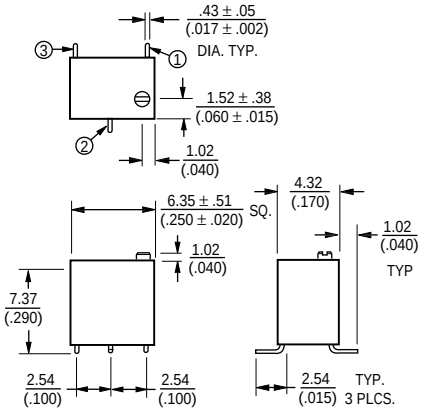

3269X

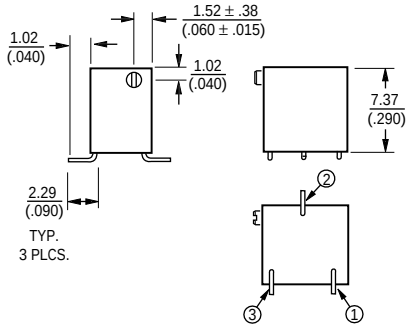

RECOMMENDED PCB LAYOUT - "P"

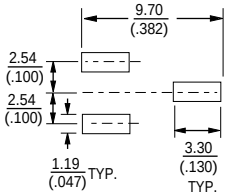

RECOMMENDED PCB LAYOUT - "W" & "X"

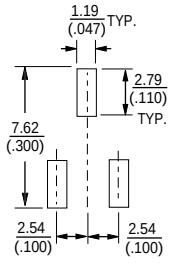

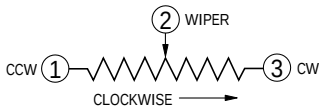

TOLERANCES: ± 0.25 (.010) EXCEPT WHERE NOTED

DIMENSIONS ARE: METRIC / (INCHES)

How To Order

3269 X - 1 - 103 G

Model
Style
Standard Product
Resistance Code
Optional Suffix Letter
G= Embossed Tape
"P" Style - 750 pcs./13˝ reel
"W, X" Style - 500 pcs./13˝ reel

Standard Resistance Table

Resistance (Ohms)	Resistance Code
10	100
20	200
50	500
100	**101**
200	**201**
500	**501**
1,000	**102**
2,000	**202**
5,000	**502**
10,000	**103**
20,000	**203**
25,000	**253**
50,000	**503**
100,000	**104**
200,000	204
250,000	254
500,000	504
1,000,000	105

SHADED AREAS TYPICALLY NOT STOCKED BY DISTRIBUTORS AND NOT RECOMMENDED FOR NEW DESIGNS.

Specifications are subject to change without notice.

Packaging Specifications

(P Style)

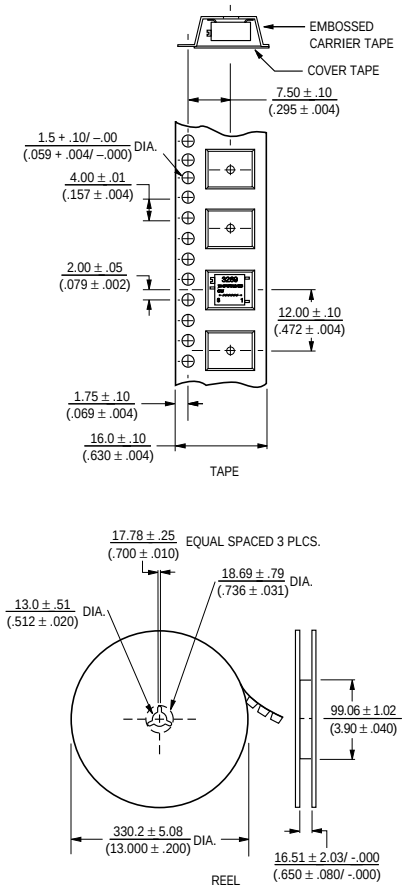

Units packaged 750 pieces per reel.

Packaging Specifications

(W & X Styles)

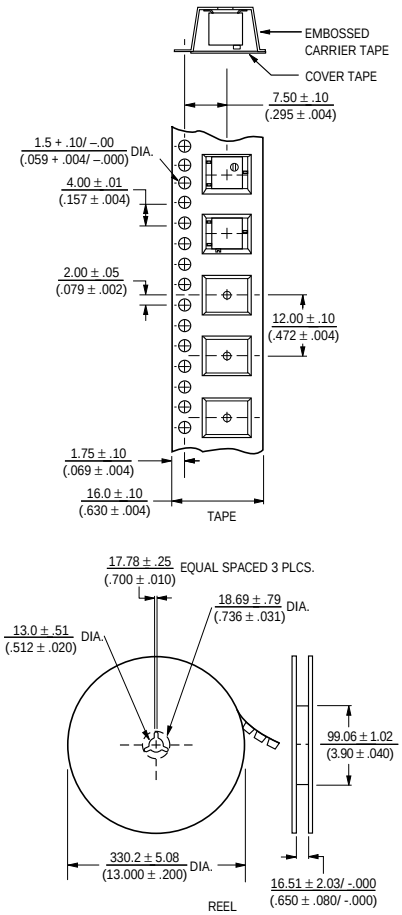

Units packaged 500 pieces per reel.



Features

- Multiturn/ Wirewound / Industrial / Sealed
- Listed on the QPL for style RT24 per MIL-R-27208 and RTR24 per High-Rel MIL-R-39015
- Panel mount option available (see page 73 for details)

3290/RT24/RTR24 - 3/8" Square Trimming Potentiometer

Electrical Characteristics

Standard Resistance Range
3290 .....10 to 50K ohms
RT24 .....10 to 10K ohms
RTR24 .....500 to 10K ohms
(see standard resistance table)
Resistance Tolerance .....±5% std.
(tighter tolerance available)
Absolute Minimum Resistance
.....0.1% or 1 ohm max.
(whichever is greater)
Noise .....100 ohms ENR max.
Resolution
.....(see standard resistance table)
Insulation Resistance .....500 vdc.
1,000 megohms min.
Dielectric Strength
Sea Level .....1,000 vac
80,000 Feet.....350 vac
Adjustment Travel .....25 turns nom.

Environmental Characteristics

Power Rating @ 85°C
3290 .....1.0 watt
RT24/RTR24 .....0.75 watt
Power Rating @ 150°C.....0 watt
Temperature Range .....-65°C to +150°C
Temperature Coefficient .....±50ppm/°C
Seal Test .....85°C Fluorinert*
Humidity
3290 .....MIL-STD-202 Method 106
96 hours (2% ΔTR; 100 Megohms IR)
RT24 .....(1% ΔTR; 10 Megohms IR)
RTR24.....(1% ΔTR; 100 Megohms IR)
Vibration
3290.....30G
(1% ΔTR; 0.5% + resolution ΔVR)
RT24/RTR24 .....20G
(1% ΔTR; 0.5% + resolution ΔVR)
Shock 100G
(1% ΔTR; 0.5% + resolution ΔVR)
Load Life
3290 .....1,000 hours 1.0 watt @ 85°C
(2% ΔTR; 500 ohms ENR)
RT24 .....1,000 hours 0.75 watt @ 85°C
(2% ΔTR; 2% + resolution ΔVR)
RTR24.....10,000 hours 0.75 watt @ 85°C
(3% + resolution ΔVR)
Rotational Life .....200 cycles
3290 .....(2% ΔTR; 500 ohms ENR)
RT24/RTR24.....(2% ΔTR)

Physical Characteristics

Torque.....5.0 oz-in. max.
Mechanical Stops.....Wiper idles
Terminals
3290 .....Solderable printed circuit pins
RT24/RTR24...MIL-STD-202; Method 208
Weight .....0.025 oz.

Physical Characteristics (cont.)

Marking
3290 .....Manufacturer's trademark, resistance code, wiring diagram, date code, manufacturer's model number and style
RT24/RTR24 .....Mil-spec part number
Wiper.....Positioned at 50% nominal
Flammability .....U.L. 94V-0
Standard Packaging .....50 pcs. per tube
Adjustment Tool H-90

How to Order

3290 H - 1 - 103 M

Model
Style
Standard or Modified Product Indicator
-1 = Standard Product
Resistance Code
Optional Suffix Letter
M = Panel Mount (Factory Installed)

See page 81 for RT24/RTR24 ordering information.
Consult factory for other available options.

3290H/RT24X/RTR24X Common Dimensions

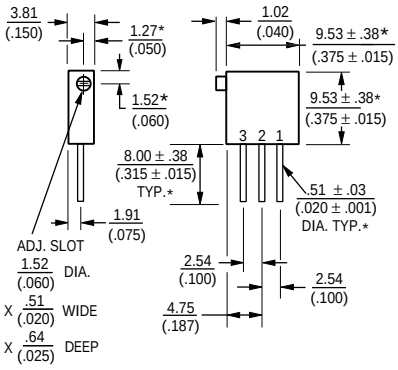

3290P/RT24/RTR24

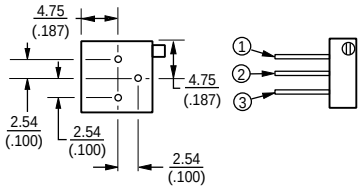

*Common dimensions

3290W/RT24/RTR24

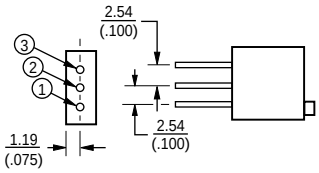

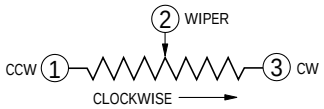

TOLERANCES: ± 0.25 (.010) EXCEPT WHERE NOTED

DIMENSIONS ARE: METRIC / (INCHES)

Standard Resistance Table

Resistance (Ohms)	Resistance Code	Nominal Resolution (Percent)
10	100	1.11
20	200	0.93
50	500	0.62
100	101	0.60
200	201	0.54
500	501	0.42
1,000	**102**	**0.33**
2,000	**202**	**0.26**
5,000	**502**	**0.20**
10,000	**103**	**0.17**
20,000	**203**	**0.14**
25,000	253	0.13
50,000	503	0.11

Popular values listed in boldface. Special resistances available.

SHADED AREAS TYPICALLY NOT STOCKED BY DISTRIBUTORS AND NOT RECOMMENDED FOR NEW DESIGNS.

*"FLUORINERT" IS A REGISTERED TRADEMARK OF 3M CO.

Specifications are subject to change without notice.

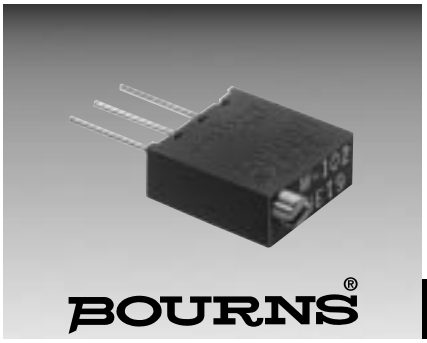

Features

- Multiturn / Cermet / Industrial / Sealed
- Optional panel mount available (see page 73 for details)
- Patent #4427966 drive mechanism
- Thin body profile

3292 - 3/8" Square Trimming Potentiometer

Electrical Characteristics

Standard Resistance Range
.....10 to 1 megohm (see standard resistance table)
Resistance Tolerance .....±10% std. (tighter tolerance available)
Absolute Minimum Resistance
.....1% or 2 ohms max. (whichever is greater)
Contact Resistance Variation
3292.....1.0% or 3 ohms max. (whichever is greater)
Adjustability
Voltage.....±0.01%
Resistance.....±0.05%
Resolution.....Infinite
Insulation Resistance .....500 vdc. 1,000 megohms min.
Dielectric Strength
Sea Level.....1,000 vac
80,000 Feet.....400 vac
Effective Travel.....25 turns nom.

Environmental Characteristics

Power Rating (400 volts max.)
85°C .....0.5 watt
150°C .....0 watt
Temperature Range.....-65°C to +150°C
Temperature Coefficient .....±100ppm/°C
Seal Test .....85°C Fluorinert* (pin styles only)
Humidity.....MIL-STD-202 Method 103 96 hours (1% ΔTR, 100 Megohms IR)
Vibration.....30G (1% ΔTR; 1% ΔVR)
Shock.....100G (1% ΔTR; 1% ΔVR)
Load Life ..1,000 hours 0.5 watt @ 85°C (2% ΔTR; 3% or 3 ohms, whichever is greater, CRV)
Rotational Life.....200 cycles (2% ΔTR; 3% or 3 ohms, whichever is greater, CRV)

Physical Characteristics

Torque .....5.0 oz-in. max.
Mechanical Stops.....Wiper idles
Terminals
.....Solderable printed circuit pins
Weight .....0.025 oz.
Machine Screw Mounting
Torque .....12 oz-in. max.
Marking
.....Manufacturer's trademark, resistance code, wiring diagram, date code, manufacturer's model number and style
Wiper .....Positioned at 50% nominal
Flammability.....U.L. 94V-0
Standard Packaging
P,W &X Styles.....50 pcs. per tube
L Style .....50 pcs. per bag
Adjustment Tool H-90

3292L
Common Dimensions

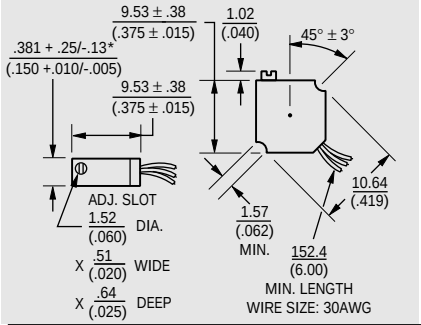

3292P

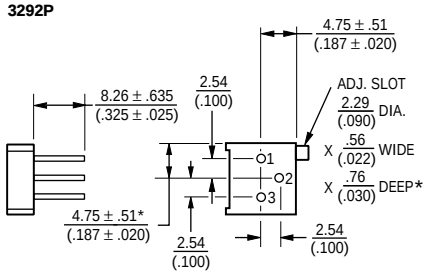

3292W

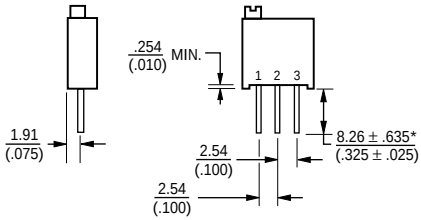

*Common dimensions

TOLERANCES: ± 0.25 (.010) EXCEPT WHERE NOTED

DIMENSIONS ARE: METRIC / (INCHES)

How To Order

3292 W - 1 - 103 M

Model
Style
Standard or Modified Product Indicator
-1 = Standard Product
Resistance Code
Optional Suffix Letter
M = Panel Mount Model 3292L, W & X (Factory Installed)

Consult factory for other available options.

3292X

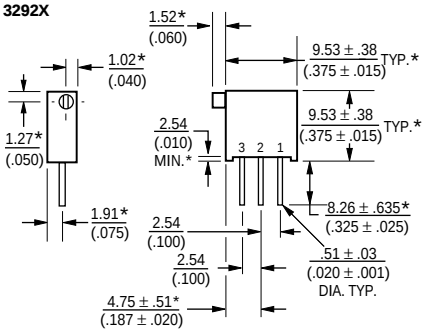

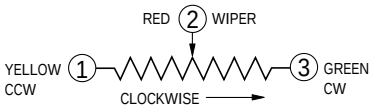

Standard Resistance Table

Resistance (Ohms)	Resistance Code
10	100
20	200
50	500
100	**101**
200	**201**
500	**501**
1,000	**102**
2,000	**202**
5,000	**502**
10,000	**103**
20,000	**203**
25,000	**253**
50,000	**503**
100,000	**104**
200,000	204
250,000	254
500,000	504
1,000,000	105

Popular values listed in boldface. Special resistances available.

SHADED AREAS TYPICALLY NOT STOCKED BY DISTRIBUTORS AND NOT RECOMMENDED FOR NEW DESIGNS.

Specifications are subject to change without notice.

*"FLUORINERT" IS A REGISTERED TRADEMARK OF 3M CO.

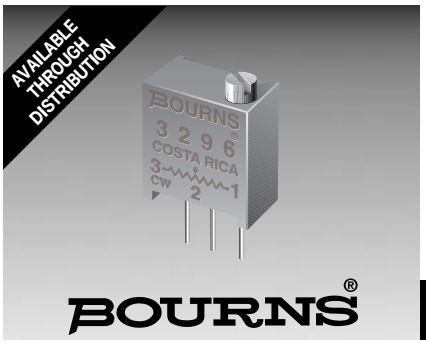

Features

- Multiturn / Cermet / Industrial / Sealed
- 5 terminal styles
- Tape and reel packaging available
- Chevron seal design
- Listed on the QPL for style RJ24 per MIL-R-22097 and RJR24 per High-Rel Mil-R-39035

3296 - 3/8" Square Trimming Potentiometer

Electrical Characteristics

Standard Resistance Range
.....10 to 5 megohms
(see standard resistance table)
Resistance Tolerance .....±10% std.
(tighter tolerance available)
Absolute Minimum Resistance
.....1% or 2 ohms max.
(whichever is greater)
Contact Resistance Variation
.....1.0% or 3 ohms max.
(whichever is greater)
Adjustability
Voltage.....±0.01%
Resistance.....±0.05%
Resolution.....Infinite
Insulation Resistance .....500 vdc.
1,000 megohms min.
Dielectric Strength
Sea Level .....900 vac
70,000 Feet.....350 vac
Effective Travel.....25 turns nom.

Environmental Characteristics

Power Rating (300 volts max.)
70°C .....0.5 watt
125°C .....0 watt
Temperature Range
.....-55°C to +150°C
Temperature Coefficient
.....±100ppm/°C
Seal Test .....85°C Fluorinert*
Humidity.....MIL-STD-202 Method 103
96 hours
(2% ΔTR, 10 Megohms IR)
Vibration.....20G (1% ΔTR; 1% ΔVR)
Shock.....100G (1% ΔTR; 1% ΔVR)
Load Life
.....1,000 hours 0.5 watt @ 70°C
(3% ΔTR; 3% or 3 ohms,
whichever is greater, CRV)
Rotational Life.....200 cycles
(4% ΔTR; 3% or 3 ohms,
whichever is greater, CRV)

Physical Characteristics

Torque .....3.0 oz-in. max.
Mechanical Stops.....Wiper idles
Terminals.....Solderable pins
Weight .....0.03 oz.
Marking .....Manufacturer's
trademark, resistance code,
wiring diagram, date code,
manufacturer's model
number and style
Wiper .....Positioned at 50% nominal
Flammability .....U.L. 94V-0
Standard Packaging .....50 pcs. per tube
Adjustment Tool H-90

*"FLUORINERT" IS A REGISTERED TRADEMARK OF 3M CO.

Common Dimensions

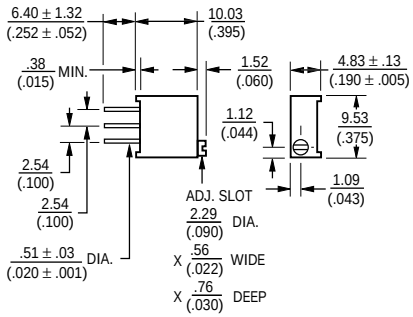

3296P

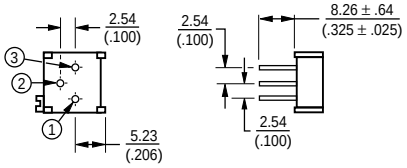

3296W

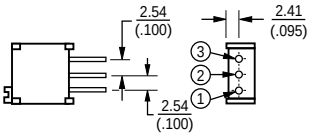

3296X

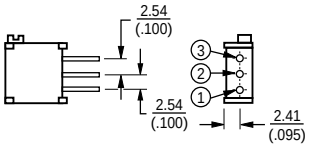

How To Order

3296 W - 1 - 103

Model
Style
Standard or Modified Product Indicator
-1 = Standard Product
Resistance Code

Consult factory for other available options.

3296Y (Commercial Only)

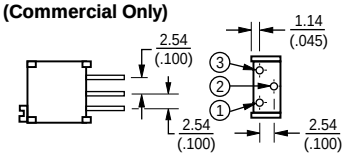

3296Z (Commercial Only)

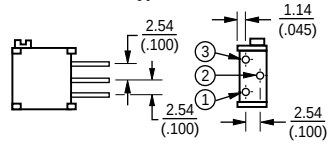

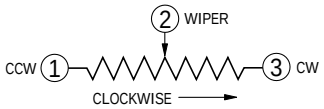

TOLERANCES: ± 0.25 (.010) EXCEPT WHERE NOTED

DIMENSIONS ARE: METRIC / (INCHES)

Standard Resistance Table

Resistance (Ohms)	Resistance Code
10	**100**
20	**200**
50	**500**
100	**101**
200	**201**
500	**501**
1,000	**102**
2,000	**202**
5,000	**502**
10,000	**103**
20,000	**203**
25,000	**253**
50,000	**503**
100,000	**104**
200,000	**204**
250,000	**254**
500,000	**504**
1,000,000	**105**
2,000,000	**205**

Popular values listed in boldface. Special resistances available.

Specifications are subject to change without notice.

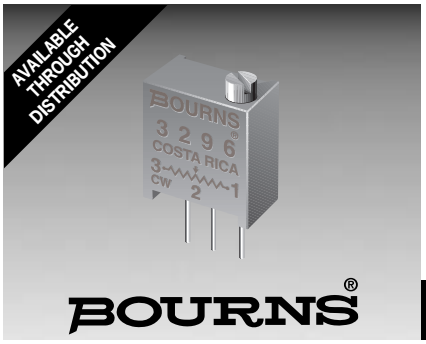

Features

- Low TCR
- Multiturn / Cermet / Industrial / Sealed
- 3 terminal styles
- Chevron seal design

Applications

- Rheostat applications with wiper currents less than 25 microamps
- Process control instrumentation
- Power supplies

3296-LTC - 3/8" Square Trimming Potentiometer

Electrical Characteristics

Standard Resistance Range
.....2K to 25K ohms
(see standard resistance table)
Resistance Tolerance .....±10% std.
(tighter tolerance available)
Absolute Minimum Resistance
.....1% or 2 ohms max.
(whichever is greater)
Contact Resistance Variation
.....1.0% or 3 ohms max.
(whichever is greater)
Adjustability
Voltage.....±0.01%
Resistance.....±0.05%
Resolution.....Infinite
Insulation Resistance .....500 vdc.
1,000 megohms min.
Dielectric Strength
Sea Level.....900 vac
70,000 Feet.....350 vac
Effective Travel.....25 turns nom.

Environmental Characteristics

Power Rating (300 volts max.)
70°C .....0.5 watt
125°C .....0 watt
Temperature Range
.....-55°C to +150°C
Temperature Coefficient
End to End.....±20ppm/°C
Through the Wiper.....±50ppm/°C
Seal Test .....85°C Fluorinert*
Humidity.....MIL-STD-202 Method 103
96 hours
(2% ΔTR, 10 Megohms IR)
Vibration.....20G (1% ΔTR; 1% ΔVR)
Shock.....100G (1% ΔTR; 1% ΔVR)
Load Life
.....1,000 hours 0.5 watt @ 70°C
(3% ΔTR; 3% or 3 ohms,
whichever is greater, CRV)
Rotational Life.....200 cycles
(4% ΔTR; 3% or 3 ohms,
whichever is greater, CRV)

Physical Characteristics

Torque .....3.0 oz-in. max.
Mechanical Stops.....Wiper idles
Terminals .....Solderable pins
Weight .....0.03 oz.
Marking .....Manufacturer's
trademark, resistance code,
wiring diagram, date code,
manufacturer's model
number and style
Wiper .....Positioned at 50% nominal
Flammability .....U.L. 94V-0
Standard Packaging .....50 pcs. per tube
Adjustment Tool H-90

Common Dimensions

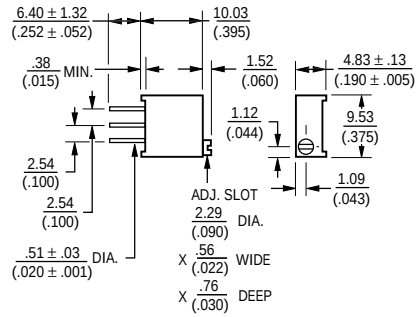

3296P

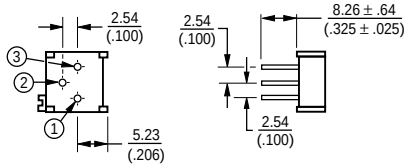

3296W

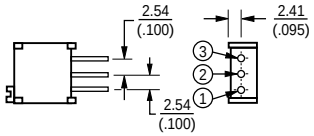

3296X

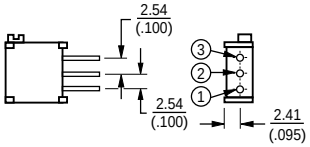

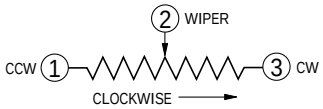

TOLERANCES: ± 0.25 (.010) EXCEPT WHERE NOTED

DIMENSIONS ARE: METRIC / (INCHES)

NOTE: TCR through the wiper applies when 40% or more of the resistance element is in the circuit.

*"FLUORINERT" IS A REGISTERED TRADEMARK OF 3M CO.

Standard Resistance Table

Resistance (Ohms)	Resistance Code
2,000	**202**
5,000	**502**
10,000	**103**
20,000	**203**
25,000	**253**

Popular values listed in boldface. Special resistances available.

How To Order

3296 W - LTC - 103

Model
Style
Product Indicator
Resistance Code

Consult factory for other available options.

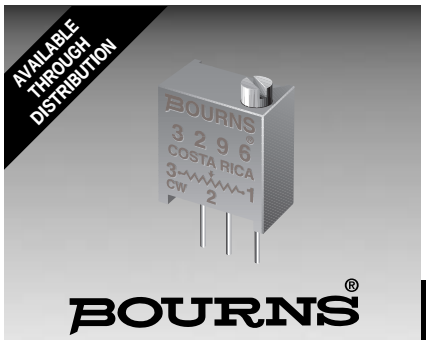

Features

- Multiturn / Cermet / Industrial / Sealed
- Standoffs
- Patent #4427966 drive mechanism
- Listed on the QPL for style RJ24 per MIL-R-22097 and RJR24 per High-Rel Mil-R-39035

RJ24/RJR24 - 3/8" Square Trimming Potentiometer

Electrical Characteristics

Standard Resistance Range
.....10 to 1 megohm
(see standard resistance table)
Resistance Tolerance .....±10% std.
Absolute Minimum Resistance
.....1 ohm max.
Contact Resistance Variation
.....3.0% or 3 ohms max.
(whichever is greater)
Adjustability
Voltage.....±0.01%
Resistance.....±0.05%
Resolution.....Infinite
Insulation Resistance .....500 vdc.
1,000 megohms min.
Dielectric Strength
Sea Level .....1,000 vac
80,000 Feet.....400 vac
Effective Travel.....25 turns nom.

Environmental Characteristics

Power Rating (300 volts max.)
85°C .....0.5 watt
150°C .....0 watt
Temperature Range
.....-55°C to +150°C
Temperature Coefficient
.....±100ppm/°C
Seal Test .....85°C Fluorinert*
Humidity.....MIL-STD-202 Method 106
RJ24 .....96 hours
(1% ΔTR, 10 Megohms IR)
RJR24.....96 hours
(1% ΔTR, 100 Megohms IR)
Vibration.....20G (1% ΔTR; 1% ΔVR)
Shock.....100G (1% ΔTR; 1% ΔVR)
Load Life
RJ24 .....1,000 hours 0.5 watt @ 85°C
(2% ΔTR; 10% ΔVR)
RJR24...10,000 hours 0.5 watt @ 85°C
(3% ΔTR)
Rotational Life.....200 cycles (2% ΔTR)

Physical Characteristics

Torque .....5.0 oz-in. max.
Mechanical Stops.....Wiper idles
Terminals .....MIL-STD 202, Method 208
Weight .....0.025 oz.
Marking.....Mil-spec part number, date code
Wiper .....Positioned at 50% nominal
Flammability .....U.L. 94V-0
Standard Packaging .....50 pcs. per tube
Adjustment Tool H-90

Common Dimensions

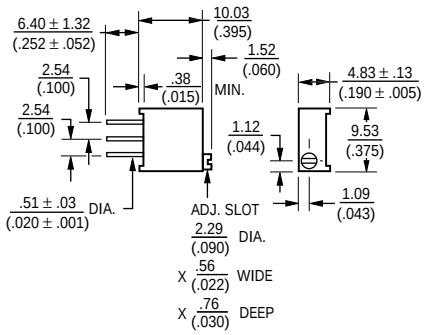

RJ24/RJR24FP

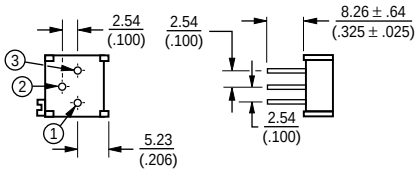

RJ24/RJR24FW

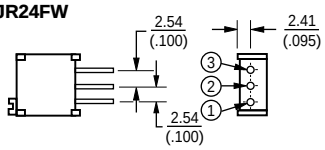

RJ24/RJR24FX

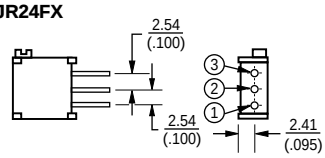

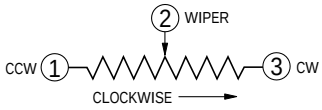

TOLERANCES: ± 0.25 (.010) EXCEPT WHERE NOTED

DIMENSIONS ARE: METRIC / (INCHES)

Standard Resistance Table

Resistance (Ohms)	Resistance Code
10	**100**
20	**200**
50	**500**
100	**101**
200	**201**
500	**501**
1,000	**102**
2,000	**202**
5,000	**502**
10,000	**103**
20,000	**203**
25,000	**253**
50,000	**503**
100,000	**104**
200,000	**204**
250,000	**254**
500,000	**504**
1,000,000	**105**

Popular values listed in boldface. Special resistances available.

How To Order

See page 81 for Model RJ24, and page 82 for Model RJR24.

*"FLUORINERT" IS A REGISTERED TRADEMARK OF 3M CO.

Specifications are subject to change without notice.

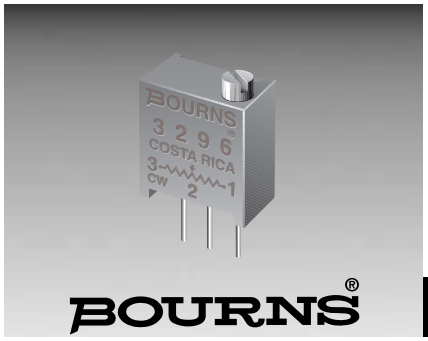

BOURNS®

Features

- High Performance Series 3/8" Square / Multiturn / Cermet / Industrial / Sealed
- Thin body profile
- Sealed to withstand board washing processes
- Patent #4427966, #4732802, #4824694
- Low current applications <50uA

3296-LC2 - 3/8" Square Trimming Potentiometer

Electrical Characteristics

Standard Resistance Range
.....500 ohms to 100K ohms
(see standard resistance table)
Resistance Tolerance .....±10% std.
Absolute Minimum Resistance
.....2 ohms or 1% max.
(whichever is greater)
Contact Resistance Variation
.....0.5% max.
Contact Resistance (D.C. mode)
.....0.3% max.
D.C. Offset .....0.5% max.
Adjustability
Voltage.....±0.1%
Resistance.....±0.2%
Insulation Resistance .....500 vdc.
1,000 megohms min.
Dielectric Strength
Sea Level .....900 vac
70,000 feet.....350 vac
Adjustment Angle, Electrical
.....25 ±5 turns

Environmental Characteristics

Power Rating (400 volts max.)
85°C .....0.5 watt
125°C .....0 watt
Temperature Range
.....-55°C to +125°C
Temperature Coefficient
.....±100ppm/°C
Humidity.....80-90%, RH, 10 cycles
2% max. TRS, IR 10 megohms
0.2% max. contact resistance shift
Seal Test .....85° C Flourinert*
Vibration .....20G - 0.5% VRS
0.2% contact resistance shift
Shock .....100G - 0.5% VRS
0.2% contact resistance shift
Load Life @ 85°C Rated Power
.....1,000 hours 3% TRS,
0.2% contact resistance
shift - 0.5% CRV
Rotational Life.....200 cycles, 4% TRS
0.2% contact resistance shift
Thermal Shock.....5 cycles
2% TRS, 0.5% VRS
0.2% contact resistance shift

Physical Characteristics

Torque .....3.0 oz-in. max.
Mechanical Stops.....Wiper idles
Terminals .....Solderable PC pins
Weight .....0.03 oz.
Marking .....Manufacturer's
trademark, resistance code
and date code
Wiper .....Set at CW end
Flammability .....U.L. 94V-0
Standard Packaging ....50 pcs. per tube
Adjustment Tool H-90

Common Dimensions

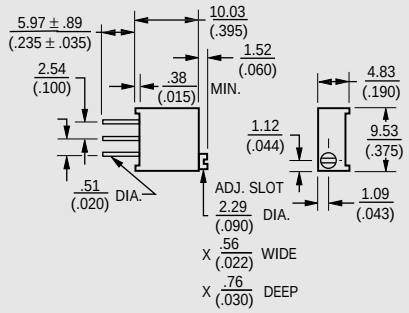

3296P

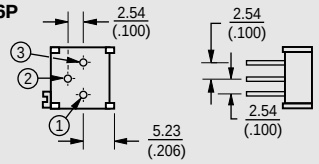

3296W

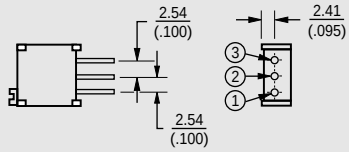

3296X

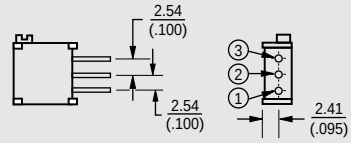

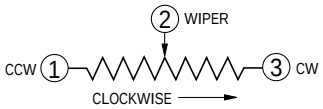

TOLERANCES: ± 0.25 (.010) EXCEPT WHERE NOTED

DIMENSIONS ARE: METRIC / (INCHES)

Standard Resistance Table

Resistance (Ohms)	Resistance Code
500	501
1,000	102
2,000	202
5,000	502
10,000	103
20,000	203
25,000	253
50,000	503
100,000	104

SHADED AREAS TYPICALLY NOT STOCKED BY DISTRIBUTORS AND NOT RECOMMENDED FOR NEW DESIGNS.

How To Order

3296 W - LC2 - 103

Model
Style
Product Indicator
Resistance Code

Consult factory for other available options.

*"FLUORINERT" IS A REGISTERED TRADEMARK OF 3M CO.

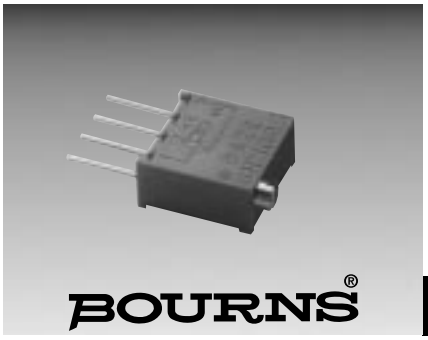

Features

- 3/8" Square/ Multiturn / Cermet Industrial / Sealed
- Designed for operational amplifier offset voltage adjustment applications
- Reduces power supply drift errors
- Unique center tapped trimming potentiometer
- Vertical and horizontal adjust types available
- Patent #4427966 drive mechanism

3296-OT1 - 3/8" Square Trimming Potentiometer

Electrical Characteristics

Standard Resistance Range
(Pin 1 to Pin 3)
.....100 ohms to 1 megohm
(see standard resistance table)
Resistance Tolerance .....±20% std.
Absolute Minimum Resistance
.....2 ohms max.
Voltage Output Variation.....+0.25%
Adjustability (VR) .....±0.025%
Insulation Resistance .....500 vdc.
.....1,000 megohms min.
Dielectric Strength
Sea Level .....900 vac
70,000 Feet.....350 vac
Effective Electrical Travel, Nom.
.....25 turns
Center Tap Resistance .....2 ohms max.
Center Tap Electrical Center.....±5%
Center Tap Dead Band .....0.5 turn

Environmental Characteristics

Power Rating
70°C .....0.5 watt
125°C .....0 watt
Temperature Range
.....-55°C to +125°C
Temperature Stability (ΔVR)
.....±0.5% max.
Seal Test .....85°C Fluorinert*
Humidity.....MIL-STD-202 Method 103
96 hours.....10 megohms min.
Vibration, 20G .....±1% ΔTR
Shock, 100G.....±1% ΔTR
Load Life, 1,000 Hours .....±3% ΔTR
Rotational Life, 200 cycles
.....±4% ΔTR

Physical Characteristics

Torque .....3.0 oz-in. max.
Mechanical Stops.....Wiper idles
Terminals .....Solderable pins
Weight .....0.03 oz.
Marking .....Manufacturer's trademark, resistance code, wiring diagram, date code, manufacturer's model number and style
Flammability .....U.L. 94V-0
Standard Packaging
.....50 pcs. per tube/tray
Adjustment Tool H-90

Also see Model 3386-OT1, page 62.

Common Dimensions

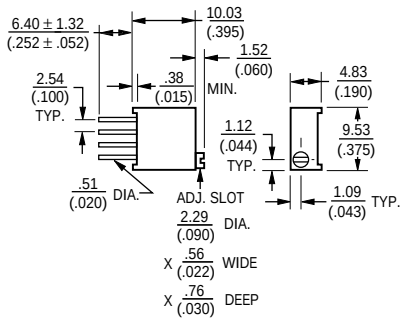

3296W-OT1

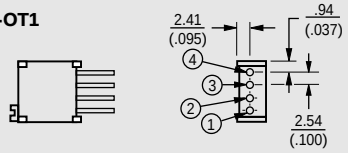

3296X-OT1

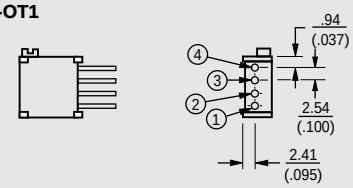

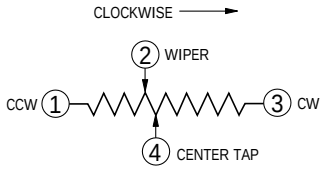

TOLERANCES: ± 0.25 (.010) EXCEPT WHERE NOTED

DIMENSIONS ARE: METRIC / (INCHES)

Standard Resistance Table

Resistance (Ohms)	Resistance Code
100	101
200	201
500	501
1,000	**102**
2,000	**202**
5,000	**502**
10,000	**103**
20,000	**203**
50,000	503
100,000	104
200,000	204
500,000	504
1,000,000	105

Popular values listed in boldface. Special resistances available.

SHADED AREAS TYPICALLY NOT STOCKED BY DISTRIBUTORS AND NOT RECOMMENDED FOR NEW DESIGNS.

Suggested Offset Voltage Adjustment Circuit

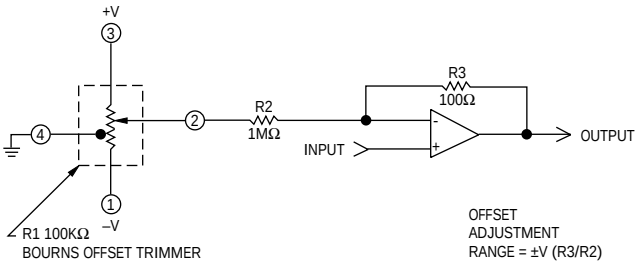

How To Order

3296 X - OT1 - 103

Model
Style
Catalog Product
Resistance Code

*"FLUORINERT" IS A REGISTERED TRADEMARK OF 3M CO.

Specifications are subject to change without notice.

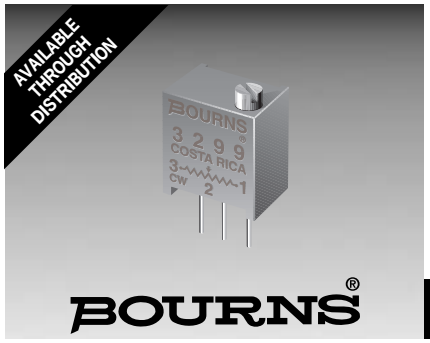

Features

- 3/8” Square/ Multiturn / Cermet / Industrial / Sealed
- Five popular terminal styles
- Standoffs
- Patent #4427966 drive mechanism

3299 - 3/8” Square Trimming Potentiometer

Electrical Characteristics

Standard Resistance Range .....10 to 2 megohms (see standard resistance table)
Resistance Tolerance .....±10% std. (tighter tolerance available)
Absolute Minimum Resistance .....1% or 2 ohms max. (whichever is greater)
Contact Resistance Variation .....1.0% or 3 ohms max. (whichever is greater)
Adjustability
Voltage.....±0.01%
Resistance.....±0.05%
Resolution.....Infinite
Insulation Resistance .....500 vdc. 1,000 megohms min.
Dielectric Strength
Sea Level.....900 vac
70,000 Feet.....350 vac
Effective Travel.....25 turns nom.

Environmental Characteristics

Power Rating (300 volts max.)
70°C .....0.5 watt
125°C .....0 watt
Temperature Range.....-55°C to +125°C
Temperature Coefficient .....±100ppm/°C
Seal Test .....85°C Fluorinert*
Humidity.....MIL-STD-202 Method 103 96 hours (2% ΔTR, 10 Megohms IR)
Vibration.....20G (1% ΔTR; 1% ΔVR)
Shock.....100G (1% ΔTR; 1% ΔVR)
Load Life .....1,000 hours 0.5 watt @ 70°C (3% ΔTR; 3% or 3 ohms, whichever is greater, CRV)
Rotational Life.....200 cycles (4% ΔTR; 3% or 3 ohms, whichever is greater, CRV)

Physical Characteristics

Torque .....3.0 oz-in. max.
Mechanical Stops.....Wiper idles
Terminals .....Solderable pins
Weight .....0.035 oz.
Marking .....Manufacturer’s trademark, resistance code, wiring diagram, date code, manufacturer’s model number and style
Wiper .....Set at CW end
Flammability .....U.L. 94V-0
Standard Packaging .....50 pcs. per tube
Adjustment Tool H-90

*”FLUORINERT” IS A REGISTERED TRADEMARK OF 3M CO.

3299P
Common Dimensions

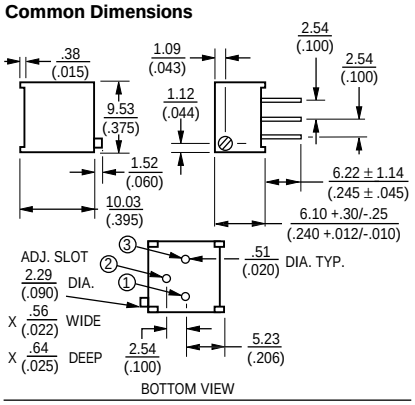

3299W

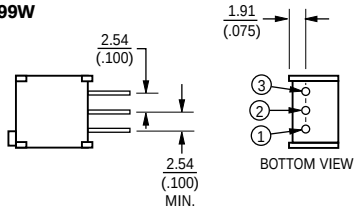

3299X

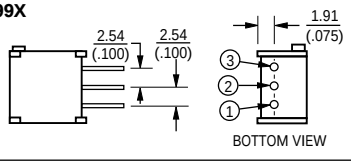

3299Y

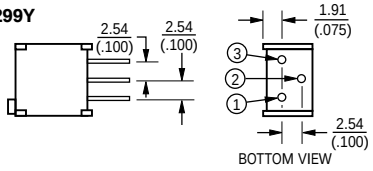

3299Z

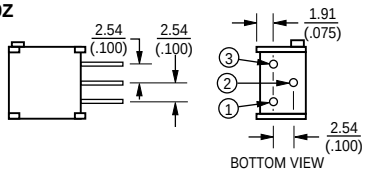

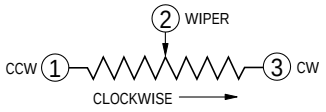

TOLERANCES: ± 0.25 (.010) EXCEPT WHERE NOTED

DIMENSIONS ARE: METRIC / (INCHES)

Standard Resistance Table

Resistance (Ohms)	Resistance Code
10	**100**
20	**200**
50	**500**
100	**101**
200	**201**
500	**501**
1,000	**102**
2,000	**202**
5,000	**502**
10,000	**103**
20,000	**203**
25,000	**253**
50,000	**503**
100,000	**104**
200,000	**204**
250,000	**254**
500,000	**504**
1,000,000	**105**
2,000,000	**205**

Popular values listed in boldface. Special resistances available.

How To Order

3299 W - 1 - 103

Model
Style
Standard or Modified Product Indicator
-1 = Standard Product
Resistance Code

Consult factory for other available options.



BOURNS®

Features

- Single-Turn Cermet / Open Frame
- Recommended for reflow processing
- Rotor design compatible with automatic adjustment equipment
- Supplied in 8mm embossed tape, compatible with automatic assembly equipment
- 2mm size meets EIA/EIAJ standard trimmer footprint

3302 - 2mm SMD Trimming Potentiometer

Electrical Characteristics

Standard Resistance Range
.....200 to 1 megohm
(see standard resistance table)
Resistance Tolerance .....±25% std.
Absolute Minimum Resistance
≤1K .....20 ohms max.
>1K .....5% max.
Contact Resistance Variation
.....5% max.
Resolution.....Infinite
Adjustment Angle.....260° ±20°

Environmental Characteristics

Power Rating (50 VDC max.)
70°C .....0.15 watt
Temperature Range
.....-40°C to +85°C
Temperature Coefficient
.....±250ppm/°C
Humidity 95%RH
500 hours
TRS max. .....±5%
Load Life
.....@ 70°C rated power 500 hours
TRS ±5%
Rotational Cycling.....10 turns
TRS ±15%

Physical Characteristics

Torque.....10-150g-cm max.
Mechanical Angle .....Continuous
Marking.....Part marking code
Standard Packaging
.....2000 pcs./7" reel
Adjustment Tool H-91

*"FLUORINERT" IS A REGISTERED TRADEMARK OF 3M CO.

How To Order

3302 X - 2 - 103 E

Model
Style
Orientation of Parts
In Tape:
Style W: Terminals Toward
Sprocket Holes
Standard or Modified
Product Indicator
-1 = Single Slot
-2 = Cross Slot Rotor (Std. Product)
Resistance Code
Embossed Tape Designator

Consult factory for other available options.

3302W, X-1
2mm Open Frame
for Reflow Soldering

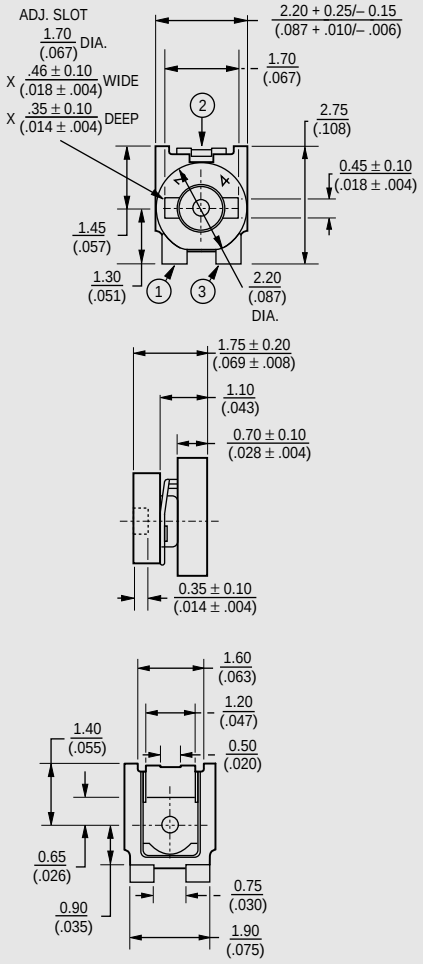

SUGGESTED PWB LAYOUT

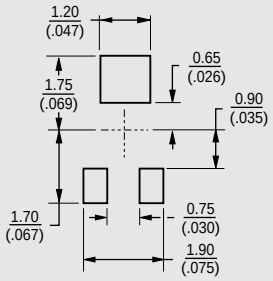

3302W, X-2
3 Terminals for
Automatic Trimming Adjustment

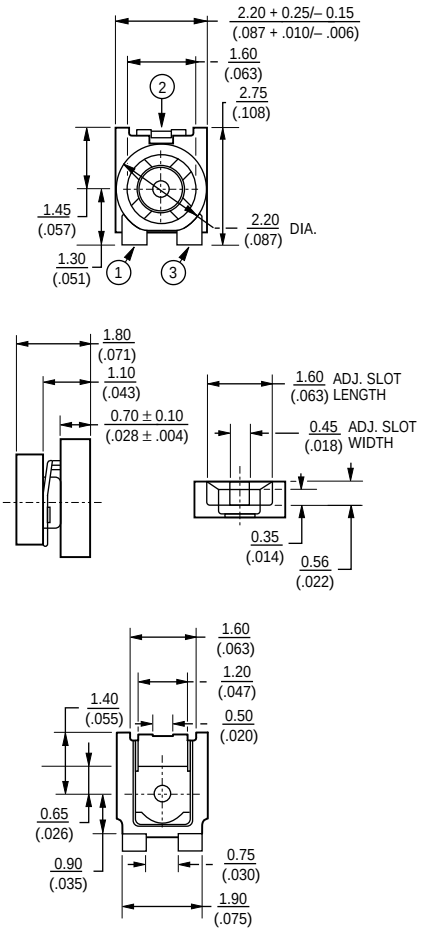

SUGGESTED PWB LAYOUT

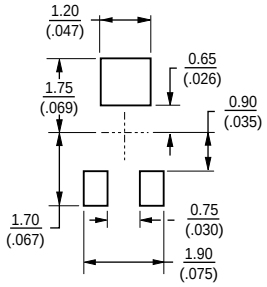

SHADED AREAS TYPICALLY NOT STOCKED BY DISTRIBUTORS AND NOT RECOMMENDED FOR NEW DESIGNS.

Specifications are subject to change without notice.

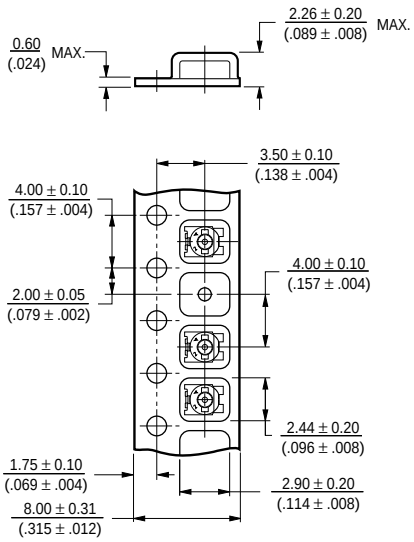

TAPE

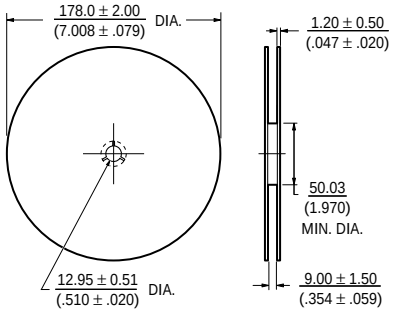

REEL

Meets EIA 481

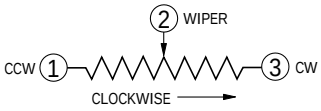

TOLERANCES: ± 0.25 (.010) EXCEPT WHERE NOTED

DIMENSIONS ARE: METRIC / (INCHES)

Standard Resistance Table

Resistance (Ohms)	Part Marking Code	Resistance Code
200	22	201
500	52	501
1,000	**13**	**102**
2,000	**23**	**202**
5,000	**53**	**502**
10,000	**14**	**103**
20,000	**24**	**203**
50,000	54	503
100,000	15	104
200,000	25	204
500,000	55	504
1,000,000	16	105

Popular values listed in boldface.

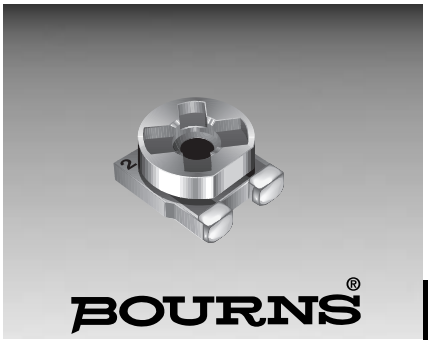

BOURNS®

Features

- Recommended for reflow processing
- Rotor design compatible with pick and place and automatic adjustment equipment
- Supplied in 8mm embossed tape, compatible with automatic assembly equipment
- Rear adjust version available
- 3mm size meets EIA/EIAJ standard trimmer footprint

3303 - 3mm SMD Trimming Potentiometer

Electrical Characteristics

Standard Resistance Range
.....100 to 1 megohm
(see standard resistance table)
Resistance Tolerance .....±25% std.
Absolute Minimum Resistance
≤ 1K Ohms.....20 ohms max.
>1K Ohms .....2% max. of TR
Contact Resistance Variation ...5% max.
Resolution.....Infinite
Adjustment Angle.....260° ±20°

Environmental Characteristics

Resistance to Soldering Heat
.....260°C, 10 seconds, TRS max. 5%
Power Rating (50 VDC max.)
70°C .....0.15 watt
Temperature Range
.....-40°C to +125°C
Temperature Coefficient
.....±250ppm/°C
Humidity 95%RH
500 hours
TRS max. .....±5%
Load Life
.....@ 70°C rated power 500 hours
TRS ±5%
Rotational Cycling.....20 turns
TRS ±15%

Physical Characteristics

Torque.....20-200g-cm max.
Mechanical Angle .....Continuous
Marking.....Part marking code
Standard Packaging
.....2000 pcs./7" reel
Adjustment Tool H-90

How To Order

3303 X - 3 - 103 E

Model
Style
Orientation of Parts In Tape:
Styles W, C -Terminals Toward Sprocket Holes
Styles X, D - Terminals Away From Sprocket Holes (prefered)
Standard or Modified Product Indicator
-1 = Single Slot
*-2 = Cross Slot Rotor (Optional)
-3 = Cross Slot Low Profile (Standard)
Resistance Code
Embossed Tape Designator

Consult factory for other available options.

*Not available in C and D styles

3303W, X-1
3mm Open Frame
for Reflow Soldering
3-Terminal

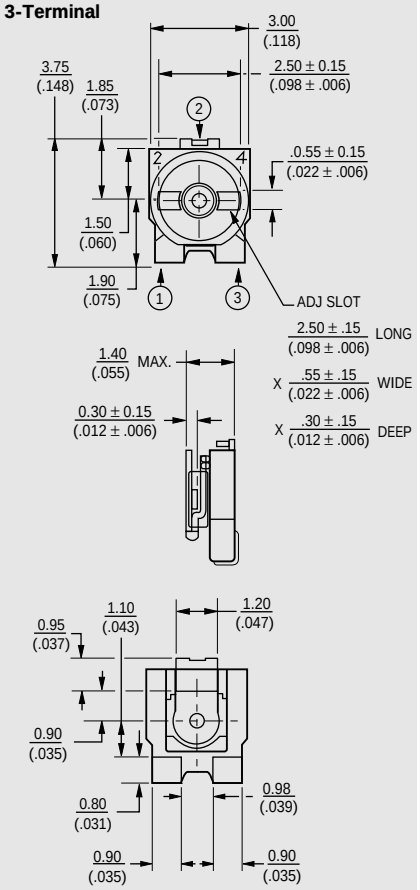

SUGGESTED PWB LAYOUT

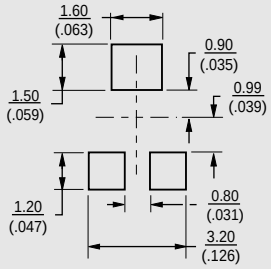

TOLERANCES: ± 0.30 (.012) EXCEPT WHERE NOTED

DIMENSIONS ARE: METRIC / (INCHES)

SHADED AREAS TYPICALLY NOT STOCKED BY DISTRIBUTORS AND NOT RECOMMENDED FOR NEW DESIGNS.

3303W, X-3
3mm Open Frame
for Reflow Soldering
3-Terminal
Low Profile

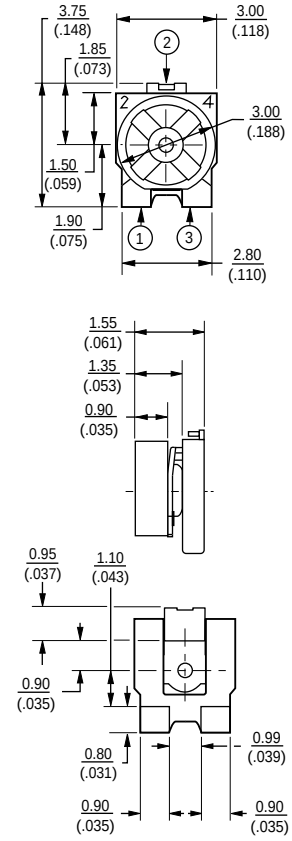

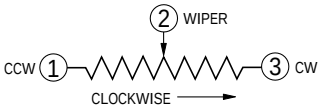

Specifications are subject to change without notice.

3303 - Dimensions and Tolerances

BOURNS®

3303W, X-2
3mm Open Frame
for Reflow Soldering
3-Terminal (OPTIONAL)

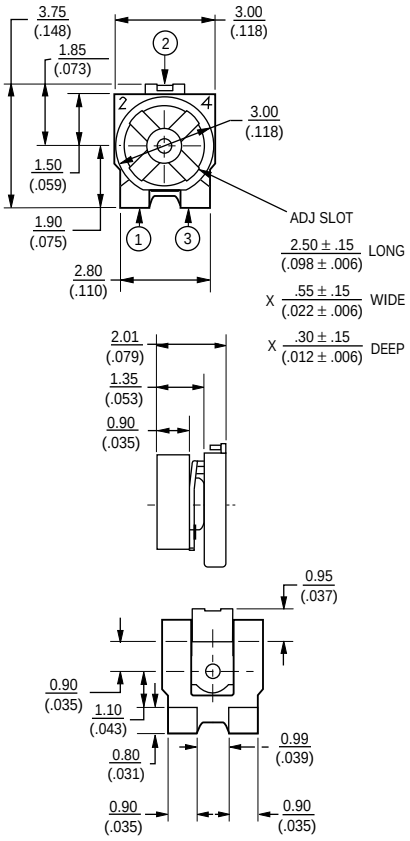

SUGGESTED PWB LAYOUT

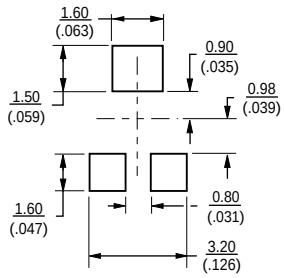

TOLERANCES: ± 0.30 (.012) EXCEPT WHERE NOTED

DIMENSIONS ARE: METRIC / (INCHES)

3303C,D
3-Terminal
Both Sides Adjust
(OPTIONAL)

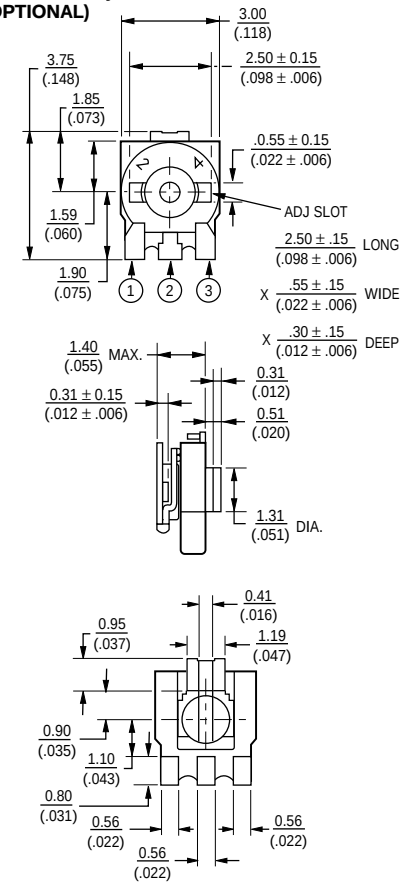

SUGGESTED PWB LAYOUT

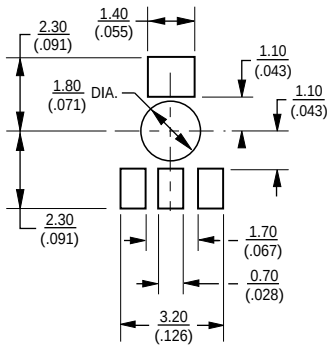

TOLERANCES: ± 0.38 (.015) EXCEPT WHERE NOTED

DIMENSIONS ARE: METRIC / (INCHES)

Packaging Specifications

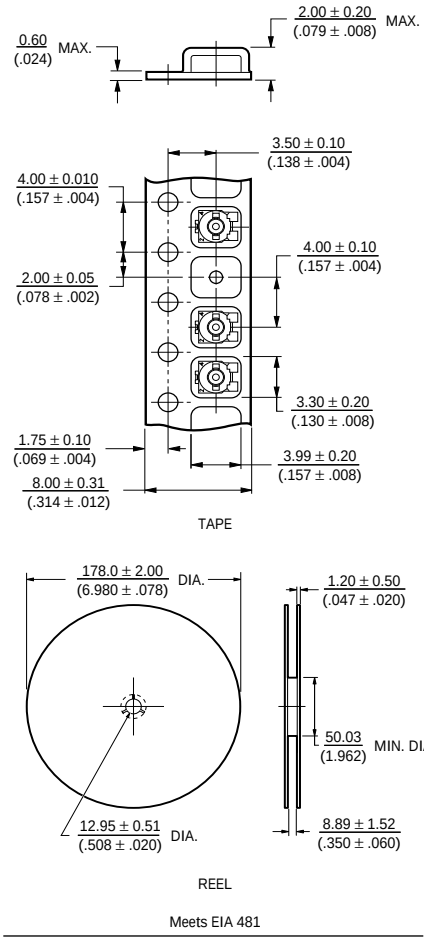

Meets EIA 481

TOLERANCES: ± 0.25 (.010) EXCEPT WHERE NOTED

DIMENSIONS ARE: METRIC / (INCHES)

Standard Resistance Table

Resistance (Ohms)	Part Marking Code	Resistance Code
100	12	101
200	22	201
500	52	501
1,000	**13**	**102**
2,000	**23**	**202**
5,000	**53**	**502**
10,000	**14**	**103**
20,000	**24**	**203**
50,000	54	503
100,000	15	104
200,000	25	204
500,000	55	504
1,000,000	16	105

Popular values listed in boldface.

SHADED AREAS TYPICALLY NOT STOCKED BY DISTRIBUTORS AND NOT RECOMMENDED FOR NEW DESIGNS.



Features

- 6mm Round / Single-Turn / Cermet Industrial / Open Frame
- Cross slot adjustment options
- Horizontal and vertical mounting styles
- Dust resistant/splash resistant covers
- PC board stand-offs and retention feature
- Front and top adjust styles

3306 - 6mm Round Trimming Potentiometer

Electrical Characteristics

Standard Resistance Range
.....100 to 1 megohm
(see standard resistance table)
Resistance Tolerance .....±25% std.
Absolute Minimum Resistance
.....2% max. (≤2K = 30 ohms)
Contact Resistance Variation ...3% max.
Resolution.....Infinite
Adjustment Angle .....215° nom.

Environmental Characteristics

Power Rating (100 volts max.)
70°C .....0.2 watt
Temperature Range .....-25°C to +100°C
Temperature Coefficient .....±250ppm/°C
Load Life ..1,000 hours 0.2 watt @ 70°C
(5% ΔTR)

Physical Characteristics

Mechanical Angle.....260° ±20°
Torque (Operating).....4.5 oz-in. max.
Stop Strength.....6.5 oz -in. min.
Terminals .....Solderable pins
Marking .....Manufacturer's trademark, resistance code
Standard Packaging ....300 pcs. per bag
Adjustment Tool H-90
Aqueous cleaning not recommended

How To Order

3306 W - 1 - 103

Model
Style
Standard Product
Resistance Code

Standard Resistance Table

Resistance (Ohms)	Resistance Code
100	**101**
200	**201**
500	**501**
1,000	**102**
2,000	**202**
5,000	**502**
10,000	**103**
20,000	**203**
25,000	**253**
50,000	**503**
100,000	**104**
200,000	204
250,000	254
500,000	504
1,000,000	105

Popular values listed in boldface. Special resistances available.

SHADED AREA NOT TYPICALLY STOCKED BY DISTRIBUTORS AND NOT RECOMMENDED FOR NEW DESIGNS.

Top Adjust
Common Dimensions

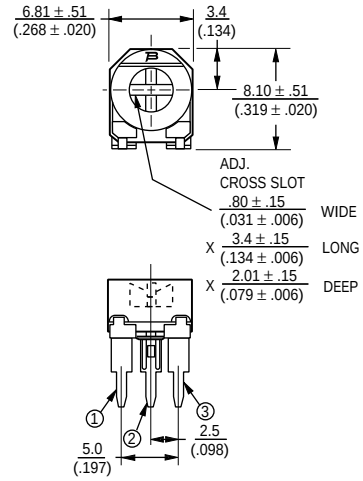

3306P

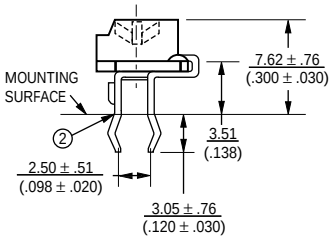

3306F

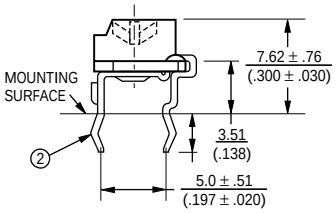

SUGGESTED PWB LAYOUT - STYLE F

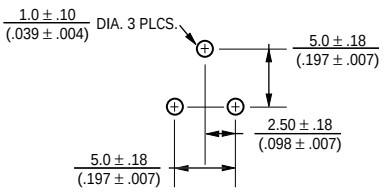

Side Adjust
Common Dimensions

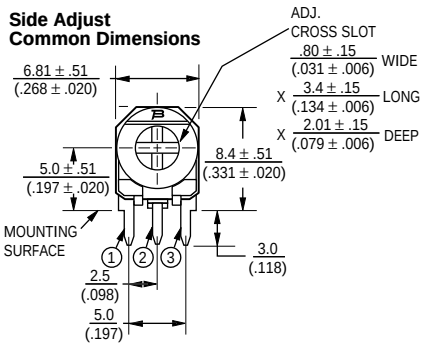

3306W

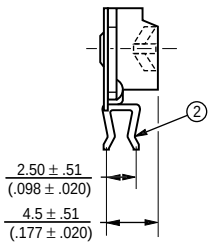

3306K

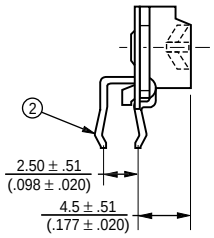

SUGGESTED PWB LAYOUT - STYLES K, P, W

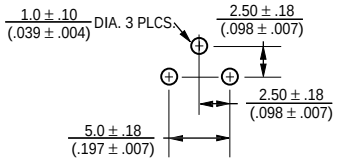

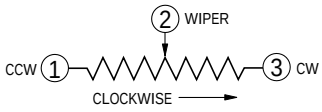

TOLERANCES: ± 0.25 (.010) EXCEPT WHERE NOTED

DIMENSIONS ARE: METRIC / (INCHES)

Specifications are subject to change without notice.



Features

- 9mm Round / Single-Turn / Cermet Industrial / Open Frame
- Both sides adjust
- Cross slot and hexagon adjustment designs
- Horizontal and vertical mounting styles
- Dust resistant/splash resistant covers
- PC board stand-offs and retention feature

3309 - 9mm Round Trimming Potentiometer

Electrical Characteristics

Standard Resistance Range
.....100 to 2 megohms
(see standard resistance table)
Resistance Tolerance .....±25% std.
Absolute Minimum Resistance
.....2% max. (≤2K = 30 ohms)
Contact Resistance Variation ...3% max.
Resolution.....Infinite
Adjustment Angle .....235° nom.

Environmental Characteristics

Power Rating (250 volts max.)
70°C .....0.5 watt
Temperature Range.....-25°C to +100°C
Temperature Coefficient .....±250ppm/°C
Load Life .....1,000 hours 0.5 watt
@ 70°C (5% ΔTR)

Physical Characteristics

Mechanical Angle.....260°±20°
Torque (Operating).....5 oz-in. max.
Stop Strength.....11.0 oz -in. min.
Terminals.....Solderable pins
Marking .....Manufacturer's
trademark, resistance code
Standard Packaging ....200 pcs. per bag
Adjustment Tool H-90
Aqueous cleaning not recommended

How To Order

3309 W - 2 - 103

Model
Pin Style
Rotor Style
-2 = Cross Slot/Single Slot Rear Adjust
-3 = 2mm Hex Thru Hole
Resistance Code

Top/Bottom Adjust
Common Dimensions
3309P

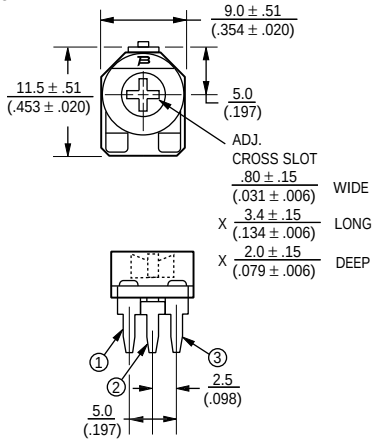

3309P-1 Top Adjust

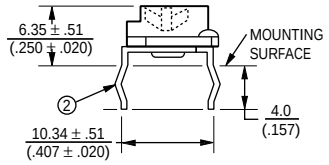

3309P-2 Both Sides Adjust/Cross Slot

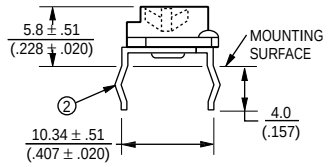

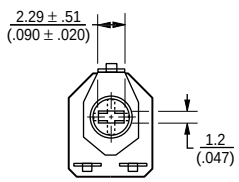

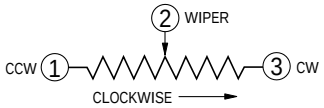

3309P-3 Both Sides Adjust Hex

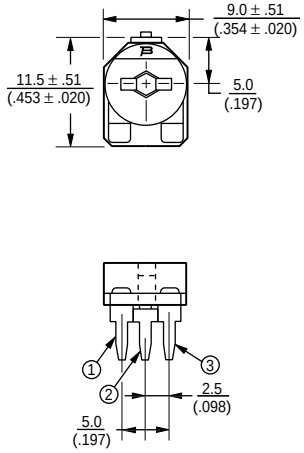

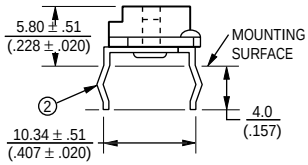

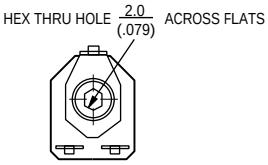

SUGGESTED PWB LAYOUT - 3309P

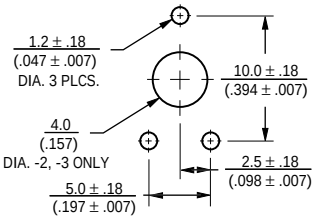

TOLERANCES: ± 0.25 (.010) EXCEPT WHERE NOTED

DIMENSIONS ARE: METRIC / (INCHES)

3309 - 9mm Round Trimming Potentiometer

BOURNS®

Side Adjust Common Dimensions
3309W

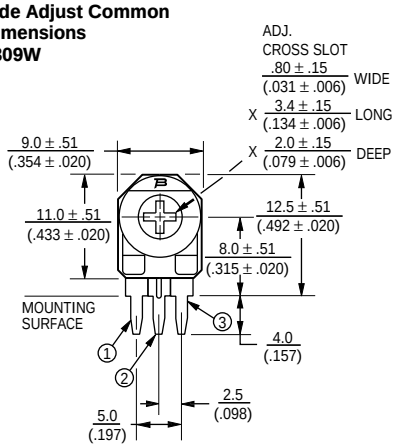

3309W-1 Single Side (Front) Adjust

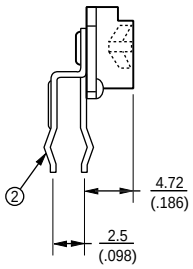

3309W-2 Both Sides Adjust - Cross Slot

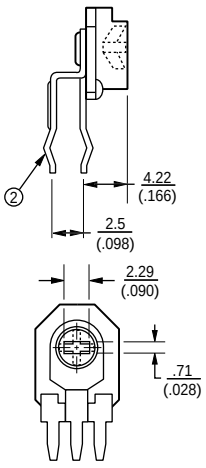

3309W-3 Both Sides Adjust Hex

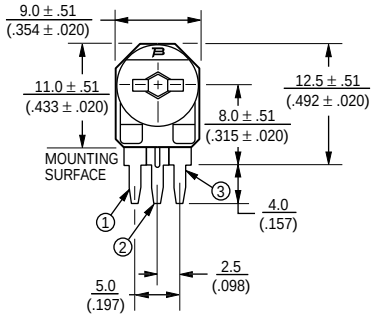

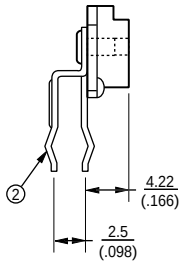

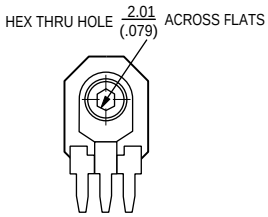

SUGGESTED PWB LAYOUT - 3309W

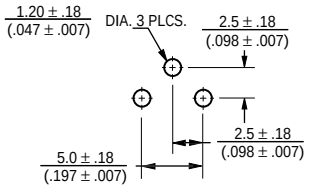

Standard Resistance Table

Resistance (Ohms)	Resistance Code
100	101
200	201
500	501
1,000	**102**
2,000	**202**
5,000	**502**
10,000	**103**
20,000	**203**
25,000	**253**
50,000	**503**
100,000	**104**
200,000	204
250,000	254
500,000	504
1,000,000	105
2,000,000	205

Popular values listed in boldface. Special resistances available.

SHADED AREA NOT TYPICALLY STOCKED BY DISTRIBUTORS AND NOT RECOMMENDED FOR NEW DESIGNS.

Specifications are subject to change without notice.



Features

- Surface Mount 3mm Square Single-Turn Cermet / Sealed
- Compatible with surface mount manufacturing processes
- Rotor stop for “in-circuit” adjustment
- 100 cycle rotational and seal life
- Patent #5043695 assembly for seal integrity
- Plastic housing for RF applications

3313 - 3mm Trimming Potentiometer

Electrical Characteristics

Standard Resistance Range
.....10 ohms to 2 megohms
(see standard resistance table)
Resistance Tolerance .....±20% std.
End Resistance.....1% or 3 ohms max.
(whichever is greater)
Contact Resistance Variation
.....3% or 3 ohms
Adjustability
Voltage Divider.....±0.1%
Rheostat .....±0.2%
Resolution.....Infinite
Insulation Resistance .....500 vdc.
100 megohms min.
Dielectric Strength
Sea Level .....500 vac
70,000 Feet.....350 vac
Adjustment Angle .....220° nom.

Environmental Characteristics

Max. Soldering Exposure
.....260°C/5 seconds
Power Rating (200 volts max.)
70°C .....0.125 watt
125°C .....0 watt
Operating Temp. Range...-55°C to+125°C
Temperature Coefficient
.....≤100 ohms ±150ppm/°C;
>100 ohms ±100ppm/°C
Seal Test .....85°C Fluorinert*
Humidity .....MIL-STD 202, Method 106
(no vibration) TRS ±3%;
IR 10 megohms
Vibration.....20G TRS ±1%; VRS ±1%
Shock.....100G TRS ±1%; VRS ±1%
Load Life .....1000 hours
@ 70°C Rated Power;TRS ± 3%
Rotational Life .....100 cycles TRS ±3%
Thermal Shock.....5 cycles
TRS ±2%; VRS ±1%

Physical Characteristics

Mechanical Angle .....250° nom.
Torque .....50g-cm max.
Stop Strength.....200g-cm min.
Pushover Strength (“S” only)
.....1.6 Kilograms (3.5 lbs) minimum
Flammability.....U.L. 94V-0
Weight.....Approx. 0.01 oz.
Marking .....Resistance code
and date code
Wiper .....Set at 50% nominal
Standard Packaging .....1000 pcs./7”reel
Adjustment Tool H-91

*”FLUORINERT” IS A REGISTERED TRADEMARK OF 3M CO.

3313J

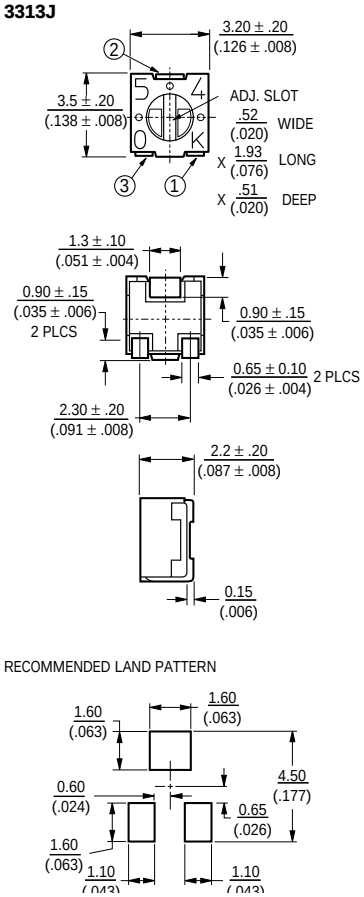

RECOMMENDED LAND PATTERN

TOLERANCES: ± 0.25 (.010) EXCEPT WHERE NOTED

DIMENSIONS ARE: METRIC / (INCHES)

3313S

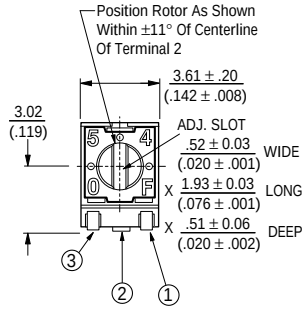

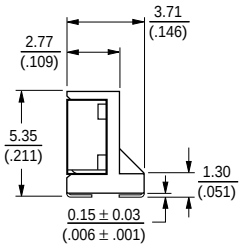

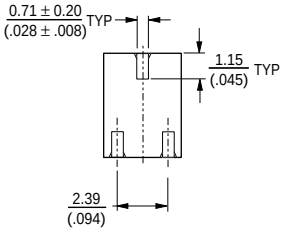

RECOMMENDED LAND PATTERN

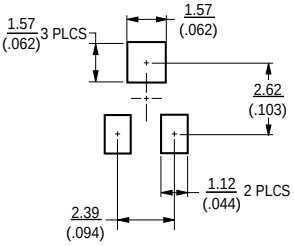

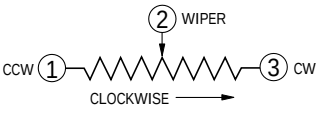

How To Order

3313 J - 1 - 502 E

Model
Style
Standard or Modified Product Indicator
-1 = Standard Product
Resistance Code
Embossed Tape
1000 pcs. / 7” Reel (Standard)

3313 Packaging Specifications

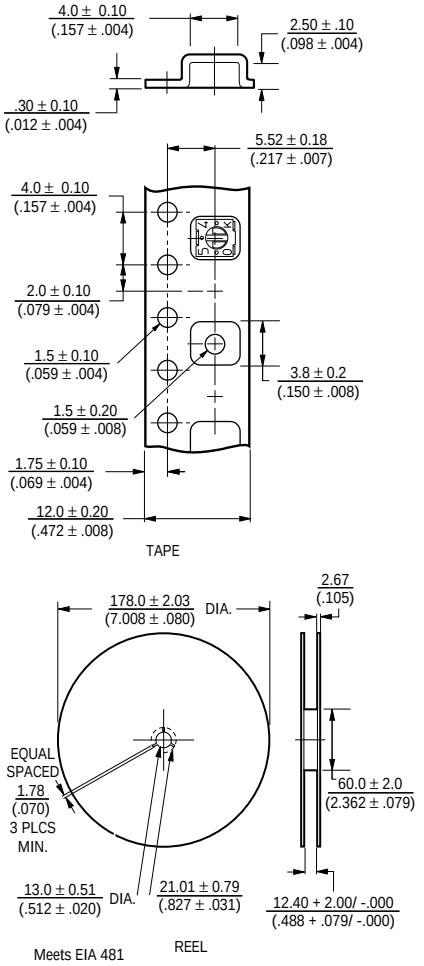

TOLERANCES: ± 0.25 (.010) EXCEPT WHERE NOTED

DIMENSIONS ARE: METRIC / (INCHES)

3313S Packaging Specifications

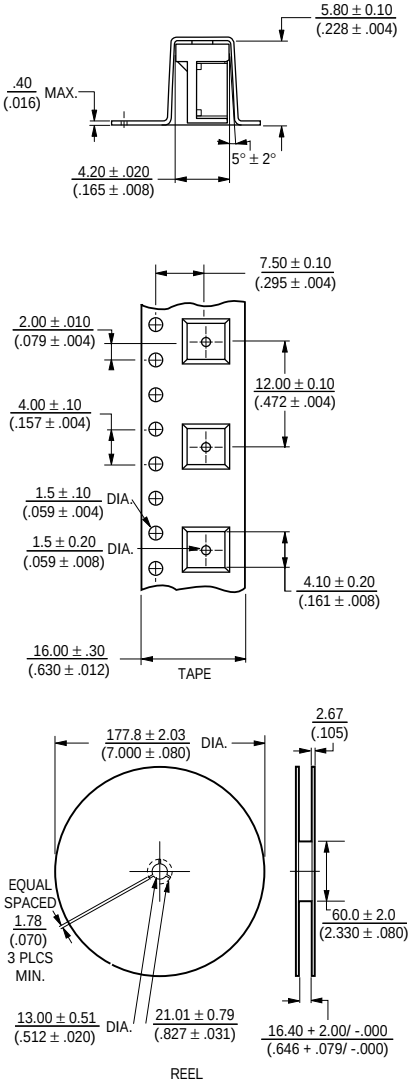

Standard Resistance Table

Resistance (Ohms)	Part Marking Code	Resistance Code
10	A1	100
20	21	200
50	51	500
100	**A2**	**101**
200	**22**	**201**
500	**52**	**501**
1,000	**A3**	**102**
2,000	**23**	**202**
5,000	**53**	**502**
10,000	**A4**	**103**
20,000	**24**	**203**
50,000	**54**	**503**
100,000	**A5**	**104**
200,000	25	204
500,000	55	504
1,000,000	A6	105
2,000,000	26	205

Popular values listed in boldface. Special resistances available.

SHADED AREA NOT TYPICALLY STOCKED BY DISTRIBUTORS AND NOT RECOMMENDED FOR NEW DESIGNS.

Specifications are subject to change without notice.



Features

- Surface Mount / Single Turn / Cermet Industrial / Sealed
- Compatible with surface mount manufacturing processes
- Compatible with popular vacuum pick-and-place equipment
- J-hook, gull-wing and pinned configurations
- Side adjust available
- Cross-slot rotor (Z Style)
- Meets EIA/EIAJ/IPC/VRCI SMD standard trimmer designs

3314 - 4mm Square Trimming Potentiometer

Electrical Characteristics

Standard Resistance Range
.....10 ohms to 2 megohms
(see standard resistance table)
Resistance Tolerance .....±20% std.
(tighter tolerance available)
End Resistance.....1% or 2 ohms max.
(whichever is greater)
Contact Resistance Variation
.....1% or 3 ohms
Resolution.....Infinite
Insulation Resistance .....500 vdc.
100 megohms min.
Dielectric Strength
Sea Level.....500 vac (1 minute)
Adjustment Angle .....210° nom.

Environmental Characteristics

Soldering Heat
.....260°C, 10 seconds, TRS ±1%
Power Rating (300 volts max.)
70°C.....0.25 watt
125°C.....0 watt
Temperature Range.....-55°C to +125°C
Temperature Coefficient .....±100ppm/°C
Humidity.....90-98% RH,
10 cycles, 240 hours
TRS ±2%; IR 10 megohms
Vibration.....20G TRS ±1%; VRS ±1%
Shock.....100G TRS ±1%; VRS ±1%
Load Life
.....(@ 70°C Rated Power 1000 Hours)
TRS ±3%
Rotational Life.....100 cycles
TRS ±3%
Thermal Shock.....5 cycles
TRS ±2%; VRS ±1%

Physical Characteristics

Mechanical Angle .....240° nom.
Torque .....180g-cm typical
Stop Strength.....300g-cm typical
Pushover Strength (Z Style)
.....2 kilograms (4.4 lbs.) minimum
Weight .....Approximately 0.01 oz.
Marking .....Manufacturer's code,
resistance code and date code
Wiper .....Positioned at 50% nominal
Flammability.....U.L. 94V-0
Standard Packaging
J & G .....500 pcs./7" reel
Z .....200 pcs./7" reel
H.....50 pcs./tube
Adjustment Tool H-90

3314J-1

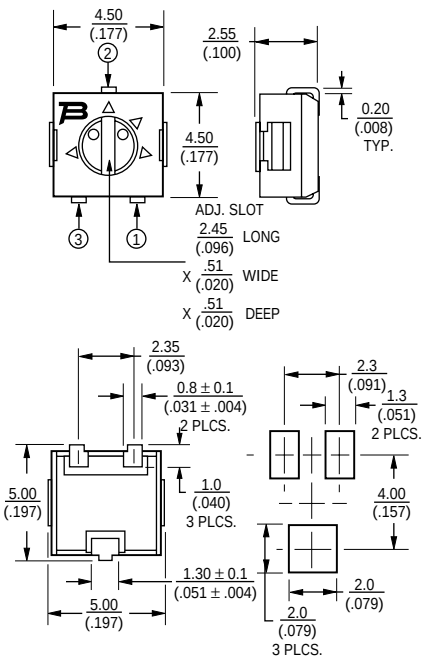

3314G-1

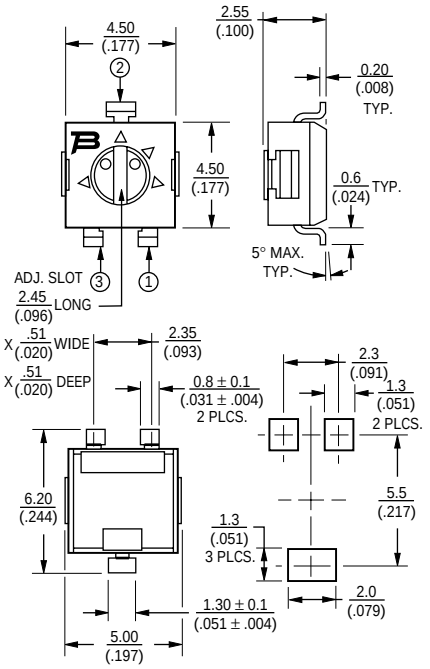

3314R-1

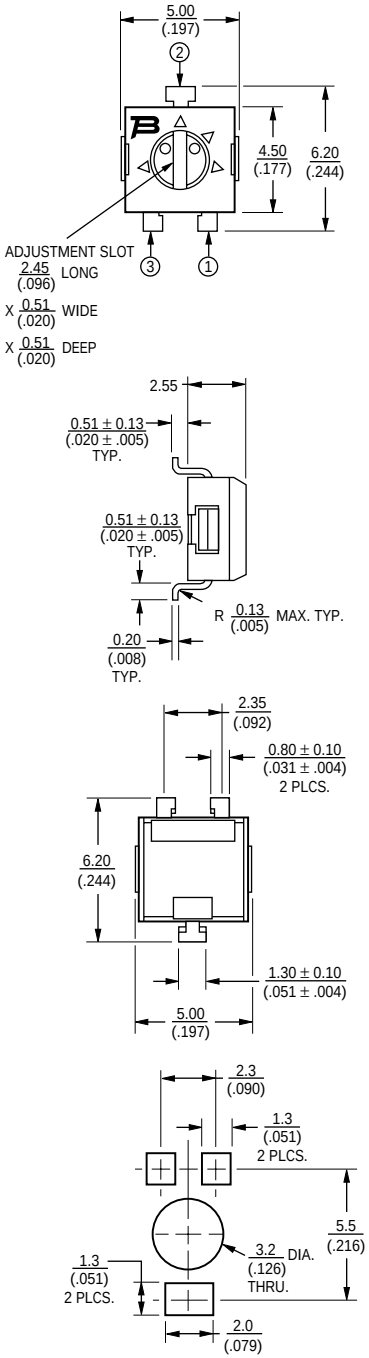

DIMENSIONS ARE: METRIC / (INCHES)

Additional Features

- Model 3314 has been approved for use by DESC on drawings 88039 (3314J) and 90027 (3314G)

3314 - 4mm Square Trimming Potentiometer

BOURNS®

3314H-1

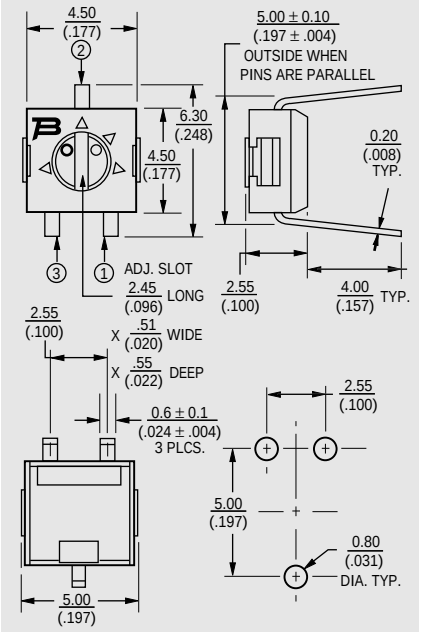

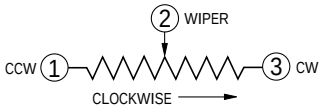

TOLERANCES: ± 0.25 (.010) EXCEPT WHERE NOTED

DIMENSIONS ARE: METRIC / (INCHES)

SHADED AREAS TYPICALLY NOT STOCKED BY DISTRIBUTORS AND NOT RECOMMENDED FOR NEW DESIGNS.

How To Order

3314 J - 1 - 502 E

Model

Style

Standard or Modified Product Indicator
- -1 = Single Slot
- -2 = Cross Slot Rotor (Style Z is standard, Styles J, G & H are available)

Resistance Code

Embossed Tape Designator (Applicable to Styles J, G and S only)
- Styles J & G: 500 pcs. /7" reel (standard)
- Style Z: 200 pcs. /7" reel (standard)

Consult factory for other available options.

3314Z

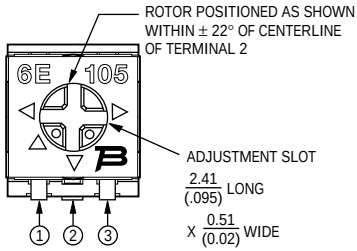

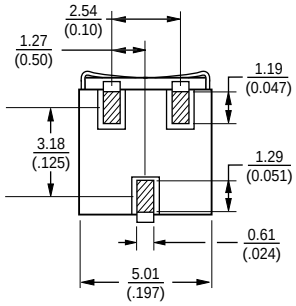

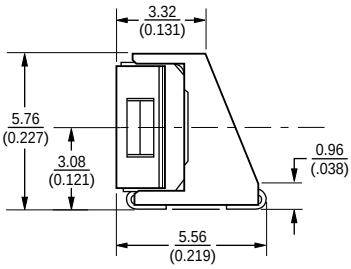

RECOMMENDED PCB LAYOUT

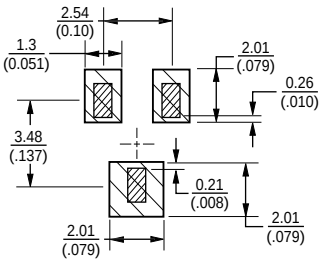

Packaging Specifications

(J, G Styles)

TAPE

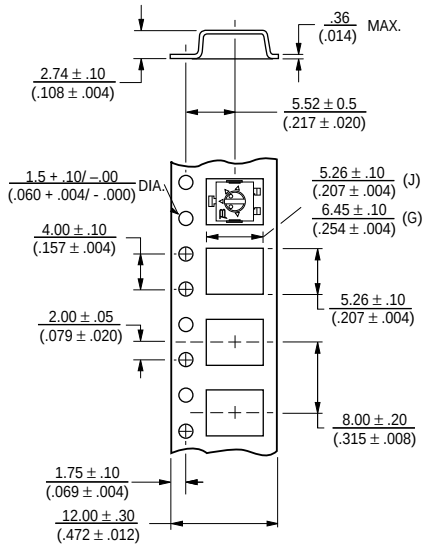

REEL

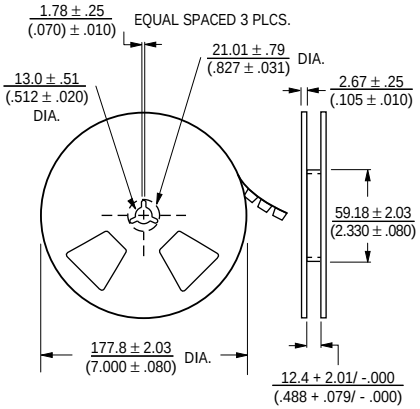

Meets EIA specification 481.

Specifications are subject to change without notice.

Packaging Specifications

(R Style)

TAPE

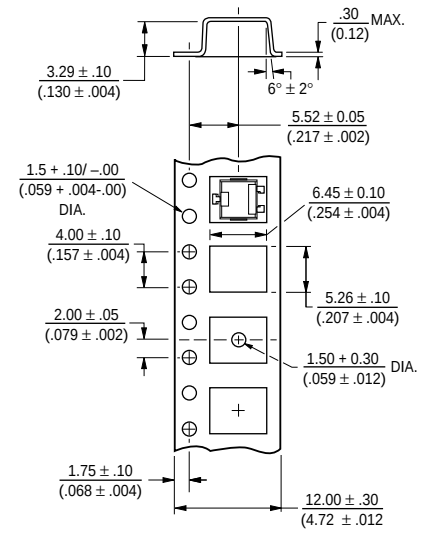

REEL

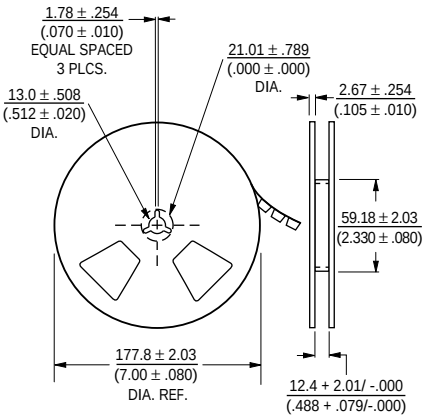

Meets EIA specification 481.

Packaging Specifications

(Z Style)

TAPE

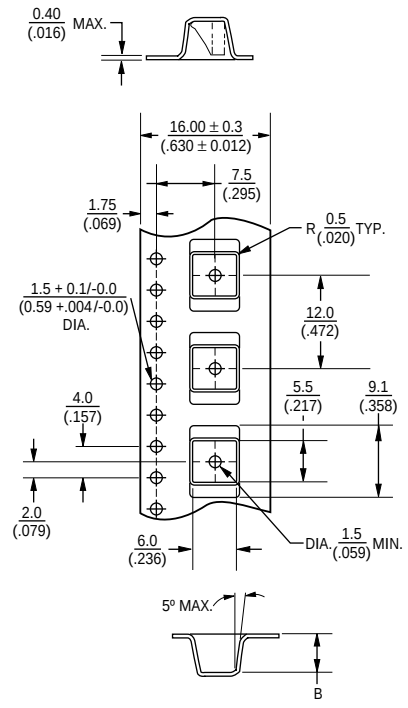

REEL

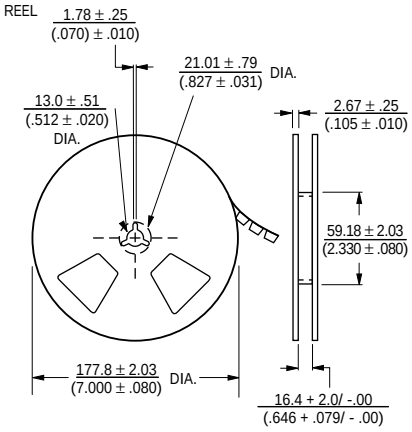

TOLERANCES: ± 0.30 (.012) EXCEPT WHERE NOTED

DIMENSIONS ARE: METRIC / (INCHES)

Standard Resistance Table

Resistance (Ohms)	Resistance Code
10	100
20	200
50	500
100	**101**
200	**201**
500	**501**
1,000	**102**
2,000	**202**
5,000	**502**
10,000	**103**
20,000	**203**
50,000	**503**
100,000	**104**
200,000	204
250,000	254
500,000	504
1,000,000	105
2,000,000	205

Popular values listed in boldface. Special resistances available.

SHADED AREAS TYPICALLY NOT STOCKED BY DISTRIBUTORS AND NOT RECOMMENDED FOR NEW DESIGNS.



Features

- Single-Turn / Carbon / Commercial Open Frame
- Cross slot rotor design suitable for automatic adjustment equipment
- Board retention feature
- Enclosed cover
- PC board stand-offs
- Adjustable front/back, top/bottom

3318 - 6mm Square Trimming Potentiometer

Electrical Characteristics

Standard Resistance Range
.....100 to 1 megohm
(see standard resistance table)
Resistance Tolerance .....±30%
Contact Resistance Variation
.....10% max.
Resolution.....Infinite
Adjustment Angle.....210° ±20°

Environmental Characteristics

Power Rating
100-500K ohms.....50V
>500K ohms.....25V
50°C.....0.1 watt
Temperature Range.....-25°C to +100°C
Temperature Coefficient ...±1000ppm/°C
Load Life ...1,000 hours 0.1 watt @ 70°C
(20% ΔTR)

Physical Characteristics

Torque (Operating).....20-250 g-cm
Stop Strength
Knob Side .....750 g-cm
Reverse Side 350g-cm
Terminals.....Solderable pins
Marking .....Resistance code, date code
Standard Packaging ....200 pcs. per bag
Adjustment Tool H-90
Aqueous cleaning not recommended

How To Order

3318 K - 1 - 103

Model
Style
Standard Product
Resistance Code

Standard Resistance Table

Resistance (Ohms)	Resistance Code
100	**101**
200	**201**
500	**501**
1,000	**102**
2,000	**202**
5,000	**502**
10,000	**103**
20,000	**203**
50,000	**503**
100,000	**104**
200,000	204
500,000	504
1,000,000	105

Popular values listed in boldface.

SHADED AREAS TYPICALLY NOT STOCKED BY DISTRIBUTORS AND NOT RECOMMENDED FOR NEW DESIGNS.

3318K

FRONT VIEW

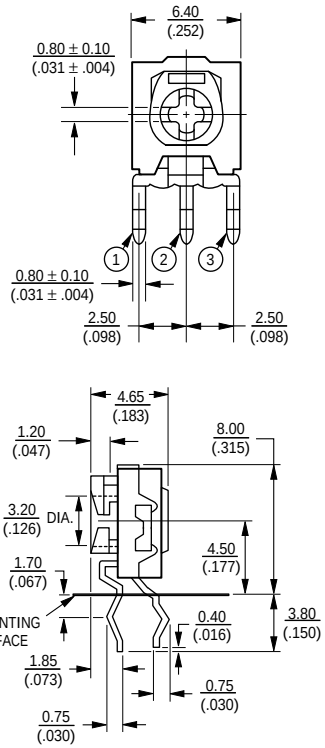

REAR VIEW

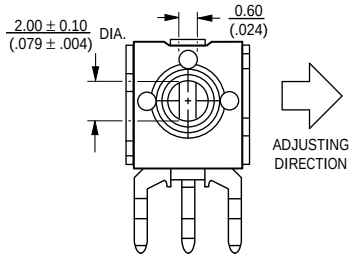

SUGGESTED PWB LAYOUT

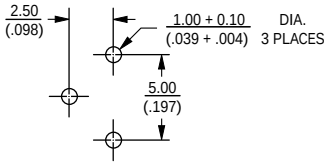

3318F

FRONT VIEW

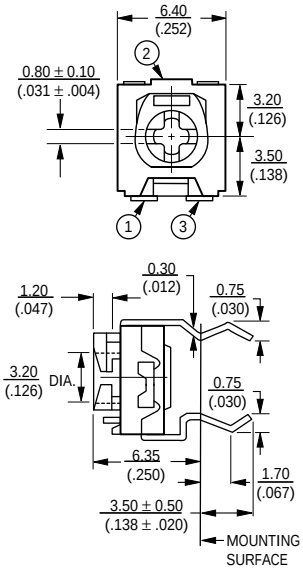

REAR VIEW

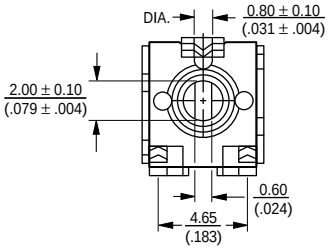

SUGGESTED PWB LAYOUT

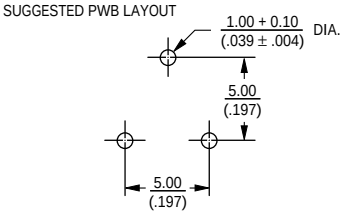

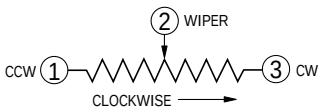

TOLERANCES: ± 0.25 (.010) EXCEPT WHERE NOTED

DIMENSIONS ARE: METRIC / (INCHES)

Specifications are subject to change without notice.



Features

- 9mm Round / Single Turn / Carbon Commercial / Open Frame
- Both sides adjust
- Cross slot and hexagon adjustment designs
- Horizontal and vertical mounting styles
- Dust resistant/splash resistant covers
- PC board stand-offs and retention feature

3319 - 9mm Round Trimming Potentiometer

Electrical Characteristics

Standard Resistance Range
.....100 to 1 megohm
(see standard resistance table)
Resistance Tolerance .....±25% std.
End Resistance
.....2% max. (≤2K = 30 ohms)
Contact Resistance Variation
.....3% max.
Resolution.....Infinite
Adjustment Angle .....235° nom.

Environmental Characteristics

Power Rating (200 volts max.)
70°C.....0.2 watt
Temperature Range
.....-25°C to +100°C
Temperature Coefficient
.....±1000ppm/°C
Load Life
.....1,000 hours 0.2 watt @ 70°C
(<100K = +3/-7% ΔTR)
(≥100K = +3/-10% ΔTR)

Physical Characteristics

Torque (Operating)
.....5 oz-in. max.
Stop Strength
.....11.0 oz -in. min.
Terminals .....Solderable pins
Marking .....Manufacturer's trademark, resistance code
Standard Packaging
.....200 pcs. per bag
Adjustment Tool H-90

Aqueous cleaning not recommended

How To Order

3319 W - 2 - 103

Model
Pin Style
Rotor Style
-2 = Cross Slot/Single Slot Rear Adjust
-3 = 2mm Hex Thru Hole
Resistance Code

3319P Common Dimensions

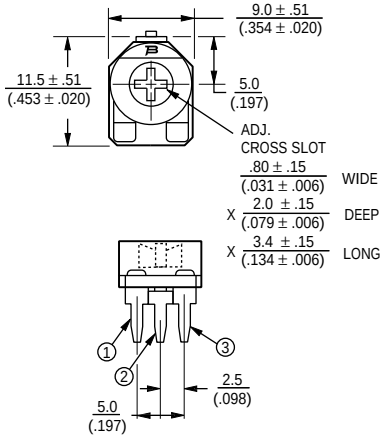

3319P-1 Top Adjust

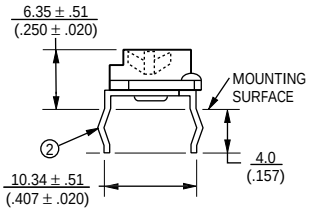

3319P-2 Both Sides Adjust/Cross Slot

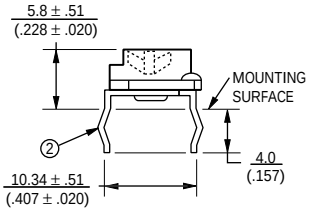

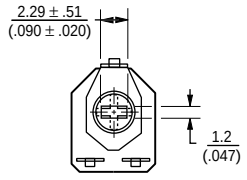

3319P-3 Both Sides Adjust/Hex

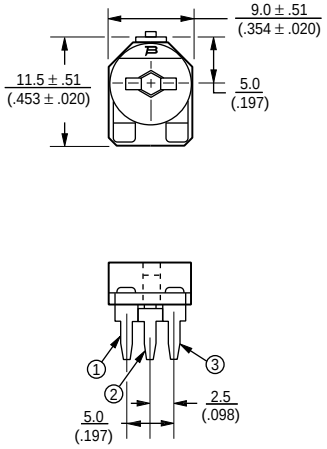

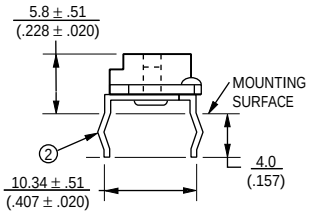

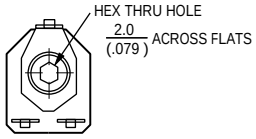

SUGGESTED PWB LAYOUT - 3319P

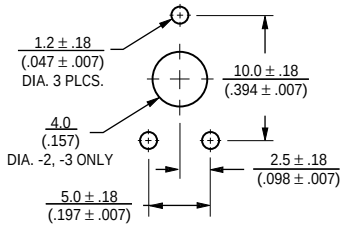

TOLERANCES: ± 0.25 (.010) EXCEPT WHERE NOTED

DIMENSIONS ARE: METRIC / (INCHES)

3319 - 9mm Round Trimming Potentiometer

BOURNS®

Side Adjust
3319W-1

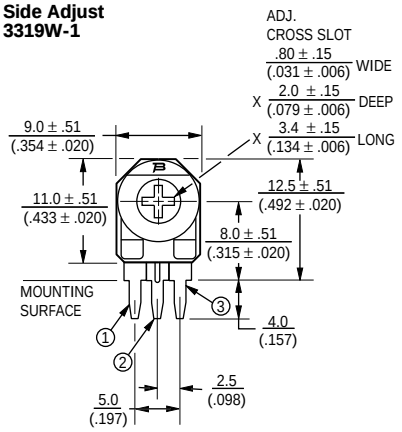

3319W-2 Both Sides Adjust /Cross Slot

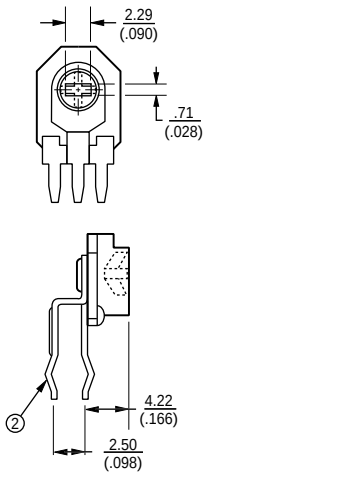

TOLERANCES: ± 0.25 (.010) EXCEPT WHERE NOTED

DIMENSIONS ARE: METRIC / (INCHES)

3319W-3 Both Sides Adjust/Hex

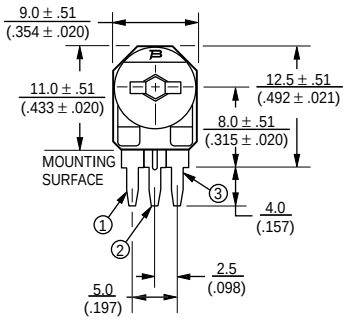

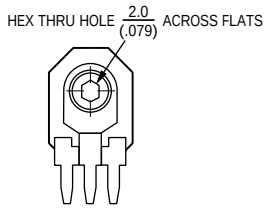

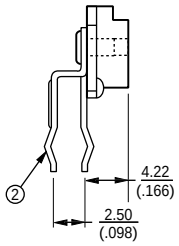

SUGGESTED PWB LAYOUT - 3319W

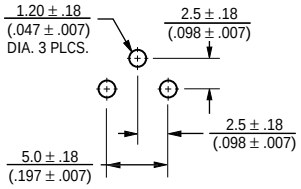

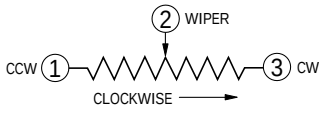

Standard Resistance Table

Resistance (Ohms)	Resistance Code
100	**101**
200	**201**
500	**501**
1,000	**102**
2,000	**202**
5,000	**502**
10,000	**103**
20,000	**203**
50,000	**503**
100,000	**104**
200,000	204
500,000	504
1,000,000	105

Popular values listed in boldface. Special resistances available.

SHADED AREAS TYPICALLY NOT STOCKED BY DISTRIBUTORS AND NOT RECOMMENDED FOR NEW DESIGNS.

Specifications are subject to change without notice.



Features

- Surface Mount / Single-Turn / Cermet Industrial / Sealed
- Compatible with surface mount manufacturing processes
- Standoffs facilitate boardwashing and mechanical stability
- Plastic housing for RF applications
- Low profile
- Patent #5043695 assembly for seal integrity

3324 - 4mm Square Trimming Potentiometer

Electrical Characteristics

Standard Resistance Range
.....10 ohms to 2 megohms
(see standard resistance table)
Resistance Tolerance .....±20% std.
(tighter tolerance available)
End Resistance
.....1% or 3 ohms max.
(whichever is greater)
Contact Resistance Variation
.....3% or 3 ohms max.
(whichever is greater)
Resolution.....Essentially Infinite
Insulation Resistance .....500 vdc.
100 megohms min.
Dielectric Strength
Sea Level.....500 vac (1 minute)
Adjustment Angle .....220° nom.

Environmental Characteristics

Soldering Heat
.....260°C, 10 seconds, TRS ±1%
Power Rating (200 volts max.)
70°C.....0.25 watt
125°C.....0 watt
Operating Temperature Range
.....-55°C to +125°C
Temperature Coefficient
<100 Ohms .....±150ppm/°C
>100 Ohms .....±100ppm/°C
Humidity.....80-98% RH,
10 cycles, 240 hours
TRS ±3%; IR 10 megohms
Vibration.....20G TRS ±1%; VRS ±1%
Shock.....100G TRS ±1%; VRS ±1%
Load Life
.....(@ 70°C Rated Power 1000 Hours)
TRS ±3%
Rotational Cycling.....100 cycles
TRS ±3%
Thermal Shock.....5 cycles
TRS ±2%; VRS ±1%

Physical Characteristics

Mechanical Angle .....250° nom.
Torque .....50g-cm typical
Stop Strength.....200g-cm typical
Weight .....Approximately 0.01 oz.
Marking .....Manufacturer's code,
resistance code and date code
Wiper .....Positioned at 50% nominal
Flammability.....U.L. 94V-0
Adjustment Tool H-91

How To Order

3324 J - 1 - 502 E

Model
Style
Standard or Modified Product Indicator
-1 = Standard Product
Resistance Code
Embossed Tape
1000 pcs./7" Reel (Standard)

3324J Common Dimensions

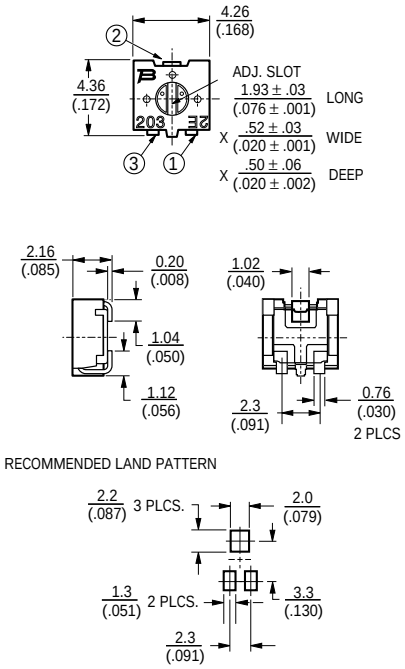

3324G

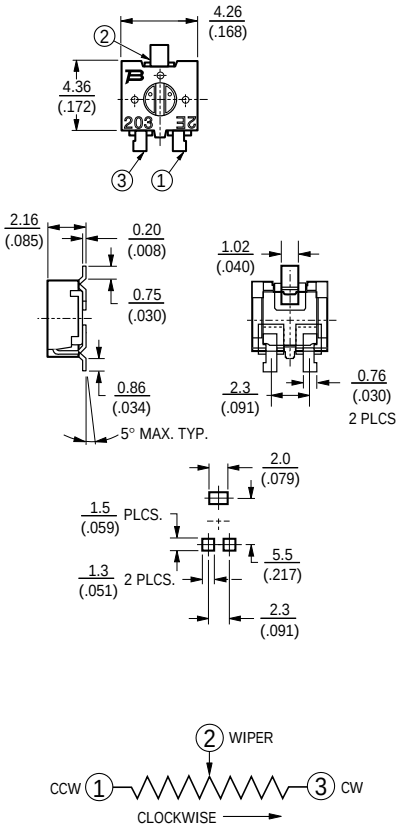

TOLERANCES: ± 0.25 (.010) EXCEPT WHERE NOTED

DIMENSIONS ARE: METRIC / (INCHES)

Packaging Specifications

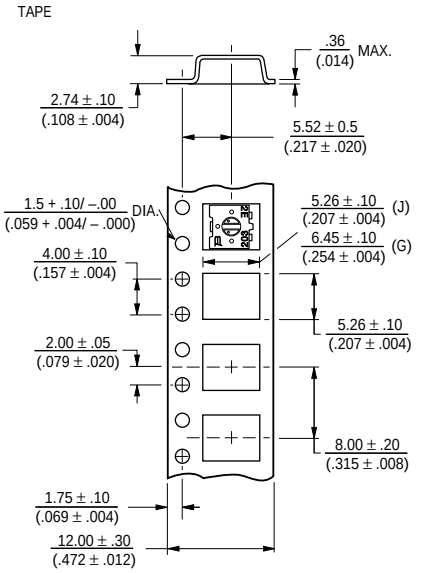

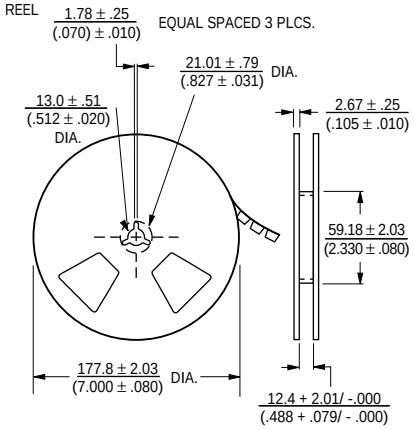

Meets EIA specification 481.

TOLERANCES: ± 0.25 (.010) EXCEPT WHERE NOTED

DIMENSIONS ARE: METRIC / (INCHES)

Standard Resistance Table

Resistance (Ohms)	Part Marking Code	Resistance Code
10	A1	100
20	21	200
50	51	500
100	**A2**	**101**
200	**22**	**201**
500	**52**	**501**
1,000	**A3**	**102**
2,000	**23**	**202**
5,000	**53**	**502**
10,000	**A4**	**103**
20,000	**24**	**203**
50,000	**54**	**503**
100,000	**A5**	**104**
200,000	25	204
500,000	55	504
1,000,000	A6	105
2,000,000	26	205

Popular values listed in boldface. Special resistances available.

Specifications are subject to change without notice.

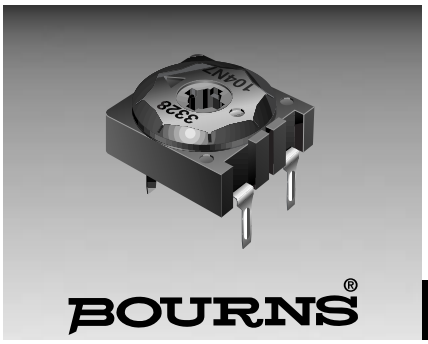

Features

- Single-turn / conductive plastic
- Commercial / dust proof / fully enclosed
- Cross slot rotor design suitable for automatic adjustment equipment
- Hexagon adjustment design
- PC board stand-off and retention feature
- Adjustable front/back, top/bottom

3328 - 9mm Square Trimming Potentiometer

Electrical Characteristics

Resistance Range.....100Ω - 5.0 MΩ
Resistance Tolerance
100Ω - 1.0 MΩ, ± 20%
>1.0MΩ- 5.0 MΩ, ± 30%
End Resistance .....3% Max
Contact Resistance Variation ....3Ω or 3% whichever is greater
Resolution .....(Infinite)
Adjustment Angle .....220°±20°
Max. Operating Voltage .....200 V

Environmental Characteristics

Power Rating.....40°C, 0.20 Watts
Temperature Range.....-25°C to + 70° C
Temperature Coefficient of Resistance .....±400 ppm , 100Ω < TR ≤ 1 MΩ
Load Life.....1000 hours 0.20w at 40°C, TRS ±10%
Vibration .....20 g, TRS ± 2%, VRS ± 2%
Shock .....100 g, TRS ± 2%, VRS ± 2%
Rotational Cycling .....500 cycles, TRS ± 3%

Physical Characteristics

Torque (Operating).....50-200 g.cm
Stop Strength .....550 g.cm
Terminals .....Solderable Pins
Marking.....Manufacturer's trademark, resistance code and date code
Standard Packaging ...200 Pcs. per Bag
Mechanical Angle .....250° ± 20°
Flammability.....UL94V-0
Wiper Position .....50% nominal

DIMENSIONS ARE: METRIC / (INCHES)

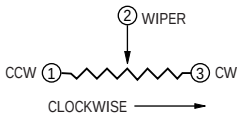

Product Dimensions

3328P

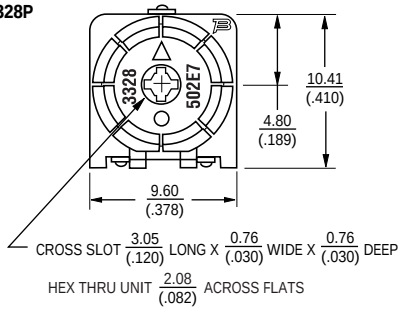

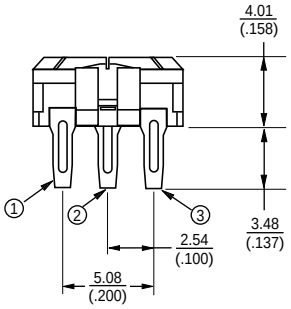

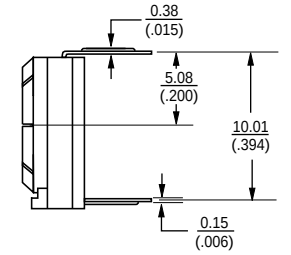

3328W

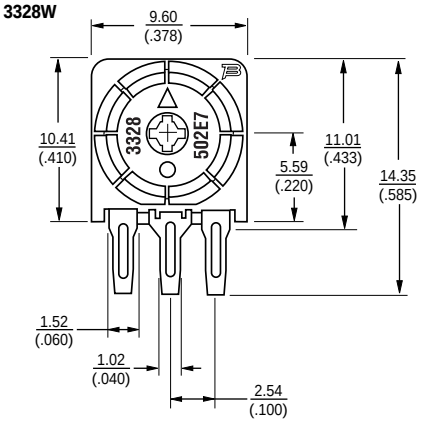

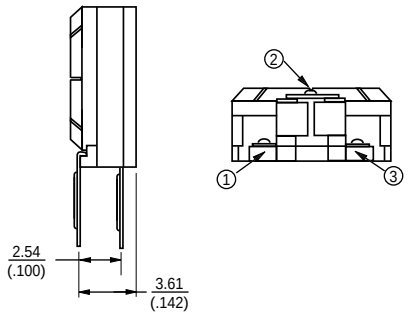

RECOMMENDED PWB MOUNTING PATTERN

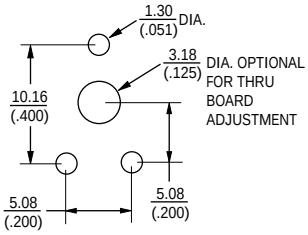

RECOMMENDED PWB MOUNTING PATTERN

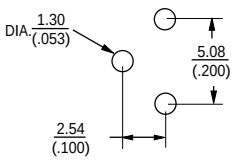

ADJUSTMENT ACCESSORIES

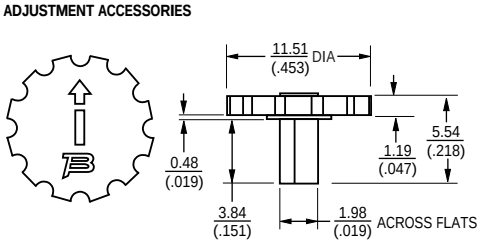

H118-1 Wheel

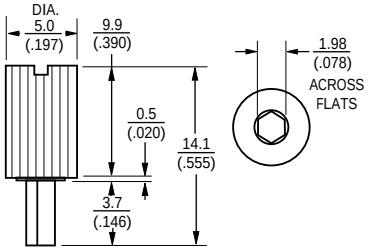

H118-2 Shaft

3328 - 9mm Square Trimming Potentiometer

BOURNS®

How to Order

3328 P - 1 - 502

Model

Style

Standard or Modified
Product Indicator
-1 = Standard Product

Resistance Code

Adjustment accessories as noted.
Example: H118-1 = Wheel

Standard Resistance Table

Resistance (Ohms)	Resistance Code	Resistance (Ohms)	Resistance Code
100	101	50000	503
500	501	100000	104
1000	102	200000	204
2000	202	500000	504
5000	502	1000000	105
10000	103	2000000	205
20000	203	5000000	505
25000	253		

Specifications are subject to change without notice.

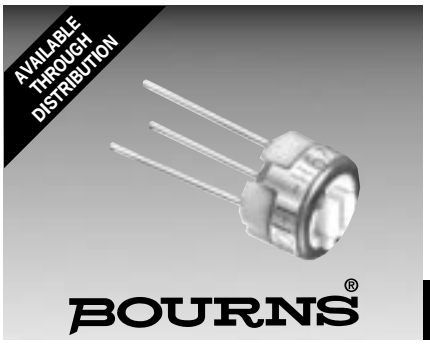

Features

- 1/4" Round / Single-Turn / Cermet Industrial / Sealed
- 5 standard terminal styles
- Tape and reel packaging available (see page 71 for details)

3329 - 1/4" Round Trimming Potentiometer

Electrical Characteristics

Standard Resistance Range
.....10 to 1 megohm
(see standard resistance table)
Resistance Tolerance .....±10% std.
(closer tolerance available)
Absolute Minimum Resistance
.....1% or 2 ohms
(whichever is greater)
Contact Resistance Variation
.....3.0% or 3 ohms max.
(whichever is greater)
Adjustability
Voltage .....±0.05%
Resistance .....±0.15%
Resolution.....Infinite
Insulation Resistance .....500 vdc.
1,000 megohms min.
Dielectric Strength
Sea Level .....600 vac
80,000 Feet.....250 vac
Adjustment Angle .....240° nom.

Environmental Characteristics

Power Rating @ 85°C (300 volts max.)
.....0.5 watt
Power Rating @ 150°C.....0 watt
Temperature Range .....-55°C to +150°C
Temperature Coefficient .....±100ppm/°C
Seal Test .....85°C Fluorinert*
Humidity.....MIL-STD-202 Method 106
96 hours
(3% ΔTR, 10 Megohms IR)
Vibration.....30G (1% ΔTR; 1% ΔVR)
Shock.....100G (1% ΔTR; 1% ΔVR)
Load Life
.....1,000 hours 0.5 watt @ 85°C
(3% ΔTR; 3% CRV)
Rotational Life.....200 cycles
(4% ΔTR; 4% CRV)

Physical Characteristics

Mechanical Angle .....260° nom.
Torque .....5.0 oz-in. max.
Stop Strength.....5.0 oz -in. min.
Terminals .....Solderable pins
Weight .....0.02 oz.
Marking.....Manufacturer's trademark,
resistance code, date code,
manufacturer's model number
and style
Wiper .....Positioned at 50% nominal
Standard Packaging .....50 pcs. per tube
Adjustment Tool H-90

3329H

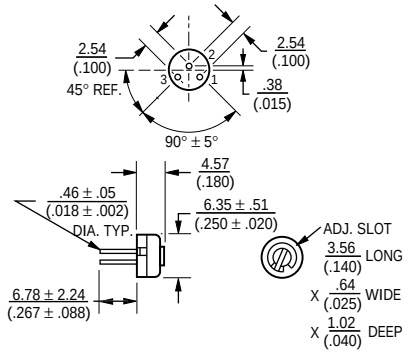

3329P

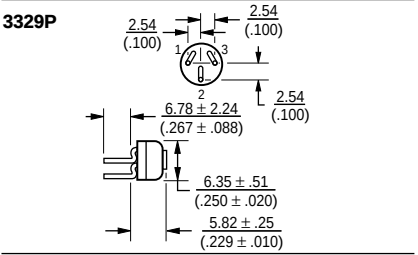

3329S

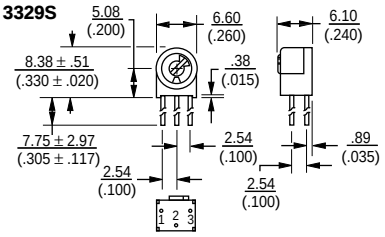

3329W

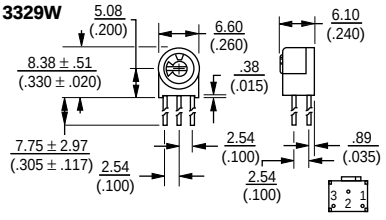

3329X

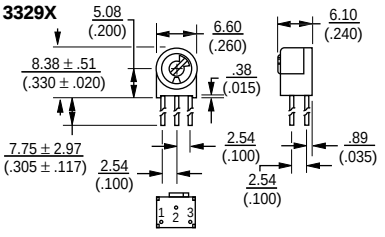

TOLERANCES: ± 0.25 (.010) EXCEPT WHERE NOTED

DIMENSIONS ARE: METRIC / (INCHES)

3329P-DK9-RC

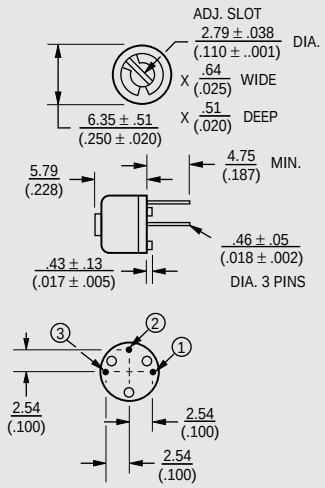

How To Order

3329 H - 1 - 103

Model
Style
Standard or Modified Product Indicator
-1 = Standard Product
-DK9 = Plastic Spacer
Resistance Code

Consult factory for other available options.

Standard Resistance Table

Resistance (Ohms)	Resistance Code
10	100
20	200
50	500
100	**101**
200	**201**
500	**501**
1,000	**102**
2,000	**202**
5,000	**502**
10,000	**103**
20,000	**203**
25,000	**253**
50,000	**503**
100,000	**104**
200,000	204
250,000	254
500,000	504
1,000,000	105

Popular values listed in boldface. Special resistances available.

SHADED AREAS TYPICALLY NOT STOCKED BY DISTRIBUTORS AND NOT RECOMMENDED FOR NEW DESIGNS.

*"FLUORINERT" IS A REGISTERED TRADEMARK OF 3M CO.

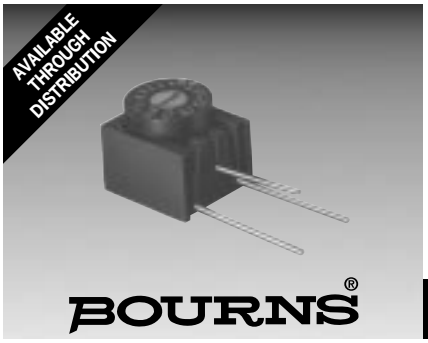

Features

- Four-Turn / Cermet / Industrial / Sealed
- Unique planetary drive offers precise wiper setting of a multiturn in a single-turn package size
- Top and side adjust styles

3339 - 5/16” Round Trimming Potentiometer

Electrical Characteristics

Standard Resistance Range
.....10 to 1 megohm
(see standard resistance table)
Resistance Tolerance .....±10% std.
(tighter tolerance available)
Absolute Minimum Resistance
.....1% or 2 ohms max.
(whichever is greater)
Contact Resistance Variation
.....3% or 3 ohms max.
(whichever is greater)
Adjustability
Voltage .....±0.05%
Resistance .....±0.1%
Resolution.....Infinite
Insulation Resistance .....500 vdc.
1,000 megohms min.
Dielectric Strength
Sea Level .....600 vac
80,000 Feet .....250 vac
Effective Travel.....4 turns nom.

Environmental Characteristics

Power Rating (300 volts max.)
85°C.....0.5 watt
150°C.....0 watt
Temperature Range
.....-55°C to +150°C
Temperature Coefficient
.....±100ppm/°C
Seal Test .....85°C Fluorinert*
Humidity.....MIL-STD-202 Method 103
96 hours
(3% ΔTR, 10 Megohms IR)
Vibration.....30G (1% ΔTR; 1% ΔVR)
Shock.....100G (1% ΔTR; 1% ΔVR)
Load Life
.....1,000 hours 0.5 watt @ 85°C
(3% ΔTR; 3% or 3 ohms,
whichever is greater, CRV)
Rotational Life.....200 cycles
(3% ΔTR; 3% or 3 ohms,
whichever is greater, CRV)

Physical Characteristics

Torque .....3 oz-in. max.
Mechanical Stops.....Wiper idles
Terminals .....Solderable pins
Weight .....0.02 oz.
Marking .....Manufacturer’s
trademark, resistance code,
wiring diagram, date
code, manufacturer’s
model number and style
Wiper .....Positioned at 50% nominal
Flammability.....U.L.94V-0
Standard Packaging .....50 pcs. per tube
Adjustment Tool H-90

*”FLUORINERT” IS A REGISTERED TRADEMARK OF 3M CO.

3339H
Common Dimensions
(Top Adjust)

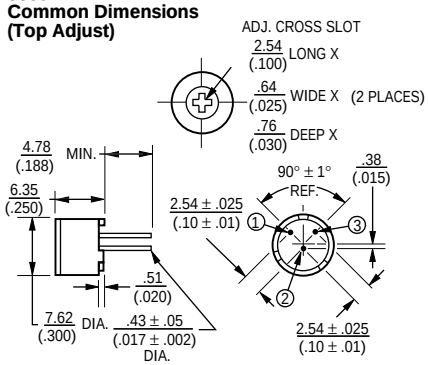

3339P

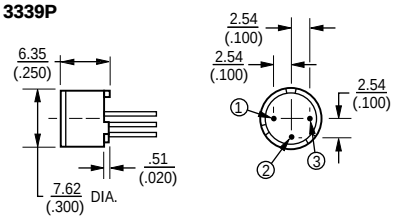

3339S
Common Dimensions (Side Adjust)

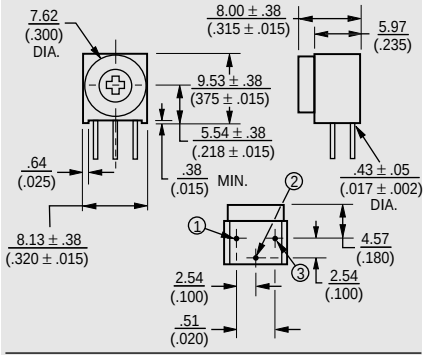

3339W

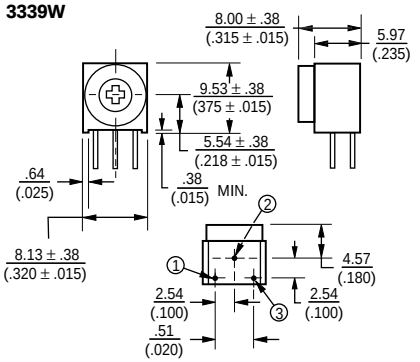

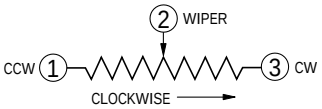

TOLERANCES: ± 0.25 (.010) EXCEPT WHERE NOTED

DIMENSIONS ARE: METRIC / (INCHES)

How To Order

3339 H - 1 - 103

Model
Style
Standard or Modified Product Indicator
-1 = Standard Product
Resistance Code

Consult factory for other available options.

Standard Resistance Table

Resistance (Ohms)	Resistance Code
10	100
20	200
50	500
100	**101**
200	**201**
500	**501**
1,000	**102**
2,000	**202**
5,000	**502**
10,000	**103**
20,000	**203**
25,000	**253**
50,000	**503**
100,000	**104**
200,000	204
250,000	254
500,000	504
1,000,000	105

Popular values listed in boldface. Special resistances available.

SHADED AREAS TYPICALLY NOT STOCKED BY DISTRIBUTORS AND NOT RECOMMENDED FOR NEW DESIGNS.

Specifications are subject to change without notice.



Features

- Single-Turn / Cermet / Industrial / Open Frame
- Stable cermet element offers infinite resolution
- Very low profile
- Seven standard pin styles
- Thumb and screwdriver adjustment

3352 - 3/8" Round Trimming Potentiometer

Electrical Characteristics

Standard Resistance Range
.....10 to 2 megohms
(see standard resistance table)
Resistance Tolerance .....±20% std.
(tighter tolerance available)
Absolute Minimum Resistance
.....2 ohms max.
Contact Resistance Variation
.....1.0% or 1 ohm max.
(whichever is greater)
Adjustability
Voltage .....±0.05%
Resistance .....±0.25%
Resolution.....Infinite
Dielectric Strength
Sea Level .....500 vac
80,000 Feet .....350 vac
Adjustment Angle .....205° nom.

Environmental Characteristics

Power Rating (250 volts max.)
85°C.....0.50 watt
125°C.....0 watt
Temperature Range
.....-55°C to +125°C
Temperature Coefficient
±100ppm/ºC .....2K & up
±150ppm/ºC.....Below 2K
Humidity.....MIL-STD-202 Method 103
96 hours
(2% ΔTR, 10 Megohms IR)
Vibration.....30G (2% ΔTR; 2% ΔVR)
Shock.....100G (2% ΔTR; 2% ΔVR)
Load Life
.....1,000 hours 0.5 watt @ 85°C
(3% ΔTR)
Rotational Life.....200 cycles
(10% ΔTR)

Physical Characteristics

Mechanical Angle .....250° nom.
Torque .....3.0 oz-in. max.
Stop Strength.....8 oz -in. min.
Terminals .....Solderable pins
Weight .....0.01 oz.
Marking .....Manufacturer's trademark, resistance value and model number. Date code on packaging.
Wiper .....Set at CW end
Standard Packaging
.....100 pcs. per bag
Adjustment Tool H-90

3352

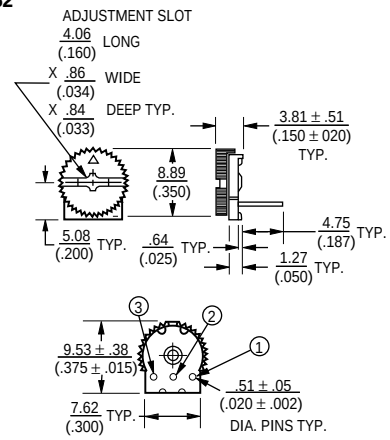

3352E **Top Adjust**

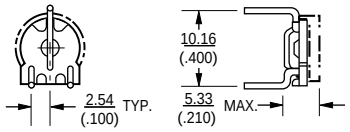

3352P

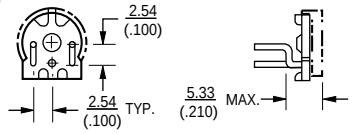

3352T

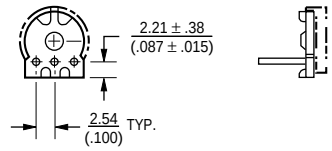

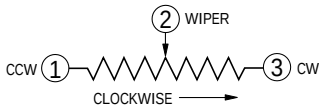

TOLERANCES: ± 0.25 (.010) EXCEPT WHERE NOTED

DIMENSIONS ARE: METRIC / (INCHES)

How To Order

3352 W - 1 - 103

Model
Style
Standard or Modified Product Indicator
-1 = Standard Product
Resistance Code

Consult factory for other available options.

3352H **Side Adjust**

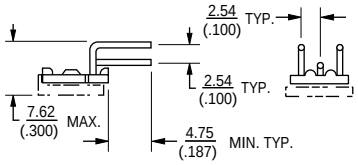

3352K

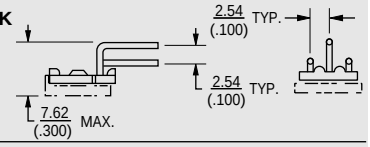

3352V

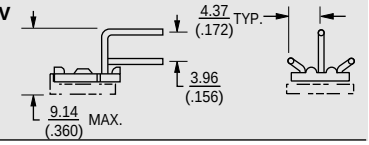

3352W

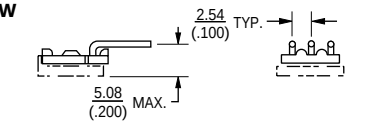

Standard Resistance Table

Resistance (Ohms)	Resistance Code
10	100
20	200
50	500
100	**101**
200	**201**
500	**501**
1,000	**102**
2,000	**202**
5,000	**502**
10,000	**103**
20,000	**203**
25,000	**253**
50,000	**503**
100,000	**104**
200,000	204
250,000	254
500,000	504
1,000,000	105
2,000,000	205

Popular values listed in boldface. Special resistances available.

SHADED AREAS TYPICALLY NOT STOCKED BY DISTRIBUTORS AND NOT RECOMMENDED FOR NEW DESIGNS.

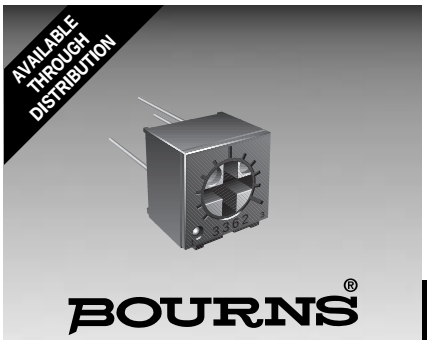

Features

- Single-Turn / Cermet / Industrial / Sealed
- Miniature package
- Rotor designed for automatic machine adjust interface
- Withstands harsh environments and immersion cleaning processes
- Available on tape and reel packaging (see page 71)

3362 - 1/4" Square Trimming Potentiometer

Electrical Characteristics

Standard Resistance Range
.....10 to 2 megohms
(see standard resistance table)
Resistance Tolerance .....±10% std.
(tighter tolerance available)
Absolute Minimum Resistance
.....1% or 2 ohms
(whichever is greater)
Contact Resistance Variation
.....1% or 3 ohms max.
(whichever is greater)
Adjustability
Voltage .....±0.05%
Resistance .....±0.15%
Resolution.....Infinite
Insulation Resistance .....500 vdc.
1,000 megohms min.
Dielectric Strength
Sea Level .....900 vac
80,000 Feet .....350 vac
Adjustment Angle .....240° nom.

Environmental Characteristics

Power Rating (300 volts max.)
70°C.....0.50 watt
125°C.....0 watt
Temperature Range
.....-55°C to +125°C
Temperature Coefficient
.....±100ppm/°C
Seal Test .....85°C Fluorinert*
Humidity.....MIL-STD-202 Method 103
96 hours
(2% ΔTR; 10 Megohms IR)
Vibration.....30G (1% ΔTR; 1% ΔVR)
Shock.....100G (1% ΔTR; 1% ΔVR)
Load Life
.....1,000 hours 0.5 watt @ 70°C
(3% ΔTR; 3% or 3 ohms,
whichever is greater, CRV)
Rotational Life.....200 cycles
(4% ΔTR; 3% or 3 ohms,
whichever is greater, CRV)

Physical Characteristics

Mechanical Angle .....270° nom.
Torque .....3.0 oz-in. max.
Stop Strength.....7.0 oz -in. min.
Terminals.....Solderable pins
Weight .....0.02 oz.
Marking .....Resistance code,
terminal numbers, manufacturer's
model number, style
and date code
Wiper .....Positioned at 50% nominal
Flammability .....U.L. 94V-0
Standard Packaging .....50 pcs. per tube
Adjustment Tool H-90

*"FLUORINERT" IS A REGISTERED TRADEMARK OF 3M CO.

Common Dimensions
Top Adjust

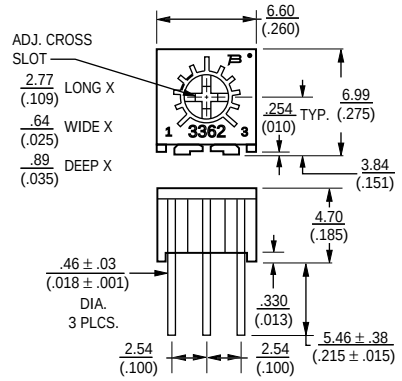

Common Dimensions
Side Adjust

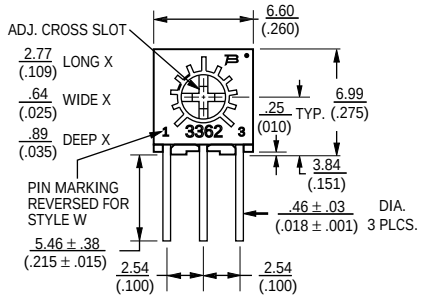

3362H

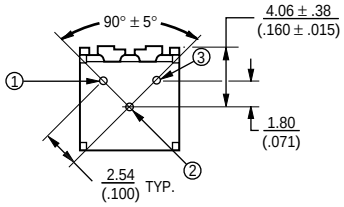

3362M

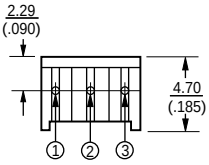

3362P

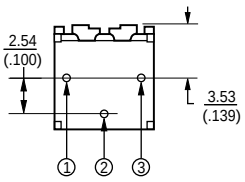

3362S

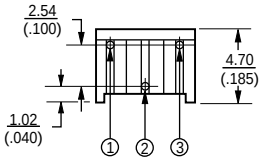

3362R

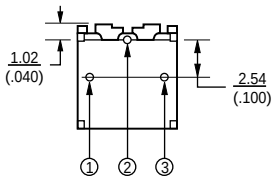

3362W

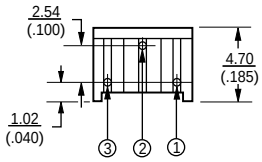

3362U

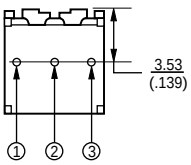

3362X

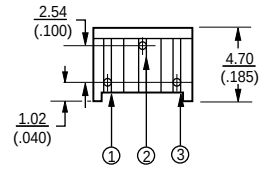

TOLERANCES: ± 0.25 (.010) EXCEPT WHERE NOTED

DIMENSIONS ARE: METRIC / (INCHES)

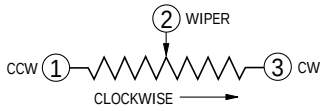

Specifications are subject to change without notice.

3362 - 1/4” Square Trimming Potentiometer

BOURNS®

How to Order

3362 P - 1 - 502

Model

Style

Standard or Modified Product Indicator
-1 = Standard Product

Resistance Code

Consult factory for other available options.

Standard Resistance Table

Resistance (Ohms)	Resistance Code
10	100
20	200
50	500
100	**101**
200	**201**
500	**501**
1,000	**102**
2,000	**202**
5,000	**502**
10,000	**103**
20,000	**203**
25,000	**253**
50,000	**503**
100,000	**104**
200,000	204
250,000	254
500,000	504
1,000,000	105
2,000,000	205

Popular values listed in boldface. Special resistances available.

SHADED AREAS TYPICALLY NOT STOCKED BY DISTRIBUTORS AND NOT RECOMMENDED FOR NEW DESIGNS.



Features

- SMD Single-Turn / Cermet / Industrial Open Frame
- Cross slot rotor designs suitable for automatic adjustment equipment
- Supplied in 12mm embossed tape, compatible with automatic pick-and-place assembly equipment
- Recommended for reflow solder processing only

3364 - 4mm Square Trimming Potentiometer

Electrical Characteristics

Standard Resistance Range
.....100 ohms to 1 megohm
(see standard resistance table)
Resistance Tolerance .....±25% std.
End Resistance
<1K .....20 ohms max.
>1K.....2%
Contact Resistance Variation
(Voltage Divider) .....5% max.
Resolution.....Infinite
Adjustment Angle.....260°±20°

Environmental Characteristics

Power Rating (50 volts max.)
70°C.....0.2 watt
Temperature Range
.....-40°C to +125°C
Temperature Coefficient
.....±250ppm/°C
Humidity.....500 hours (5% ΔTR)
Load Life .....500 hours
0.2 watt @ 70°C (5% ΔTR)
Rotational Life .....20 cycles (15% ΔTR)

Physical Characteristics

Torque.....20 to 200g-cm
Mechanical Angle .....Continuous
Marking.....Resistance code, manufacturer's full part number and date code on packaging
Terminals.....Solder coated
Standard Packaging
.....1000 pcs./7" reel
Adjustment Tool H-90
Reflow solder processing recommended

How To Order

3364 X - 1 - 103 E

Model
Style
Orientation of parts in tape:
Styles W,A
Terminals toward sprocket holes
Styles X,B
Terminals away from sprocket holes
Standard Product
Resistance Code
Embossed Tape Designator
E = 1000 pcs./7" reel (-1 standard)
G = 5000 pcs./14.5" reel (-1 optional)

Consult factory for other available options.

Common Dimensions
3364W, X
3-Terminal

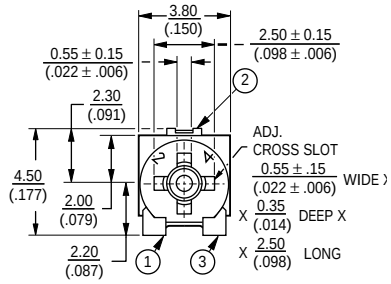

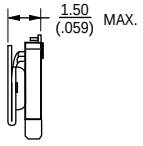

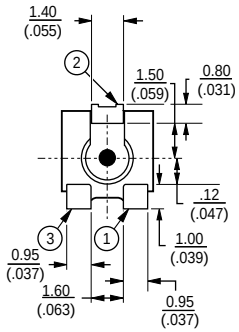

SUGGESTED PWB LAYOUT

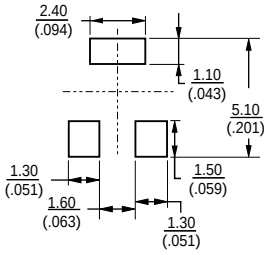

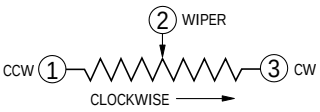

TOLERANCES: ± 0.25 (.010) EXCEPT WHERE NOTED

DIMENSIONS ARE: METRIC / (INCHES)

3364A, B
3-Terminal

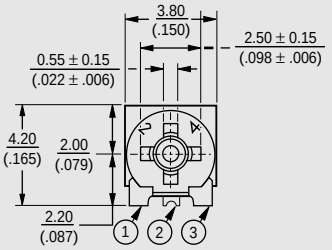

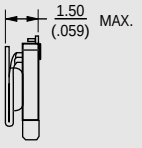

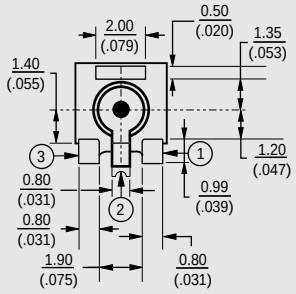

SUGGESTED PWB LAYOUT

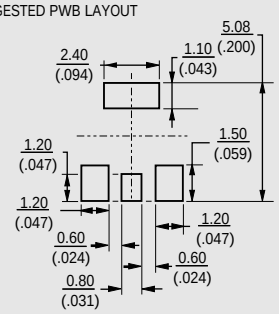

SHADED AREAS TYPICALLY NOT STOCKED BY DISTRIBUTORS AND NOT RECOMMENDED FOR NEW DESIGNS.

Specifications are subject to change without notice.

Packaging Specifications

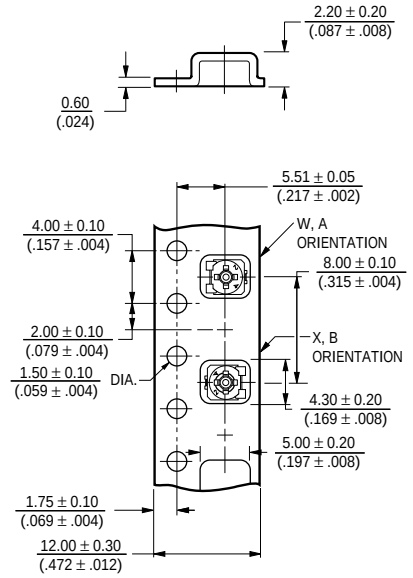

TAPE

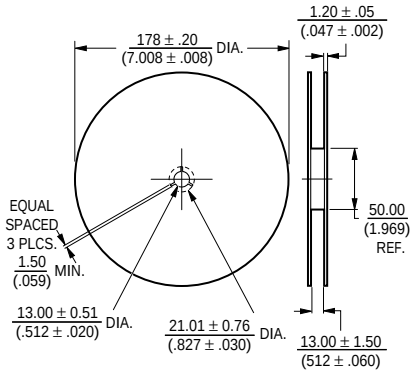

REEL

Conforms with EIA specification RS-481.

Standard Resistance Table

Resistance (Ohms)	Resistance Code	Part Marking
100	**101**	**12**
200	**201**	**22**
500	**501**	**52**
1,000	**102**	**13**
2,000	**202**	**23**
5,000	**502**	**53**
10,000	**103**	**14**
20,000	**203**	**24**
50,000	**503**	**54**
100,000	**104**	**15**
200,000	204	25
500,000	504	55
1,000,000	105	16

Popular values listed in boldface. Special resistances available.



Features

- Surface Mount / Single-Turn Cermet / Process Sealed
- Elastomer seal allows multiple adjustments (5 rotations)
- Compatible with all surface mount manufacturing processes
- Recommended for reflow processing only
- Cross-slot rotor design suitable for automatic adjustment equipment
- Supplied in 12mm embossed tape, compatible with automatic pick-and-place assembly equipment
- Patent #5,095,298
- Plastic rotor minimizes RF & ESD concerns

3374 - 4mm Square Trimming Potentiometer

Electrical Characteristics

Standard Resistance Range
.....10 to 2 megohms
(see standard resistance table)
Resistance Tolerance .....±20% std.
End Resistance.....1% or 2 ohms max.
(whichever is greater)
Contact Resistance Variation
.....3% or 3 ohms max.
(whichever is greater)
Resolution.....Infinite
Adjustment Angle .....240º nom.
Maximum Voltage 200V

Environmental Characteristics

Power Rating
70°C.....0.25 watt
125°C.....0 watt
Operating Temperature Range
.....-55°C to +125°C
Temperature Coefficient
<500K ohms.....±100ppm/°C
≥500K ohms.....±150ppm/°C
Seal .....5 turns min.
Humidity .....MIL-STD 202 Method 103
Vibration .....20G; TRS ±1%, VRS ±1%
Shock.....100G; TRS ±1%, VRS ±1%
Load Life (@70ºC Rated Power,
1000 hours) .....TRS ±3%
Rotational Life .....100 cycles; TRS ±3%
Thermal Shock.....5 cycles
TRS ±2%, VRS ±1%

Physical Characteristics

Torque.....18 - 180gm/cm
Mechanical Angle .....Continuous
Marking .....Manufacturer's trademark
and part marking code
Wiper .....Positioned at 50% nominal
Standard Packaging .....750 pcs./7" reel
Adjustment Tool H-90

How To Order

3374 X - 1 - 502 E

Model
Style
Orientation of Parts in Tape:
Style W - Terminals Toward Sprocket Holes
Standard or Modified Product Indicator
-1 = Standard Product
Resistance Code
Embossed Tape
750 pcs./7" reel (standard)

Consult factory for other available options.

3374X/W

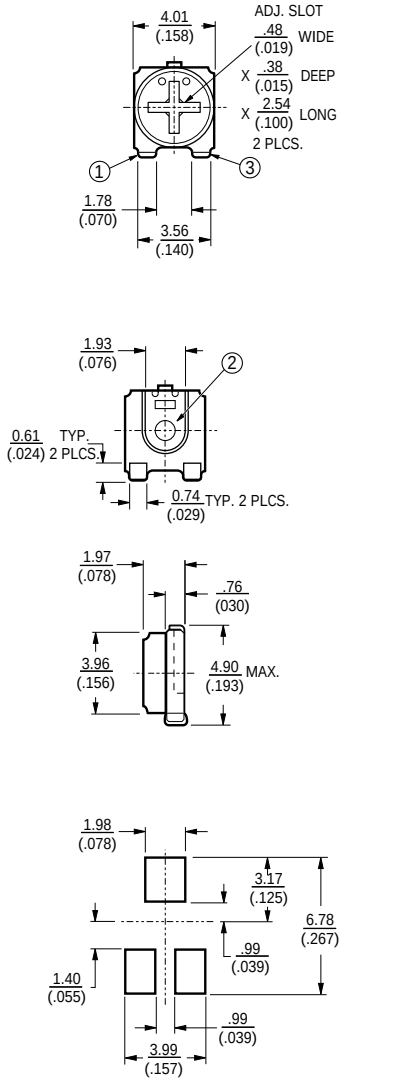

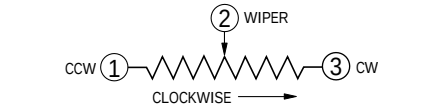

TOLERANCES: ± 0.25 (.010) EXCEPT WHERE NOTED

DIMENSIONS ARE: METRIC / (INCHES)

Packaging Specifications

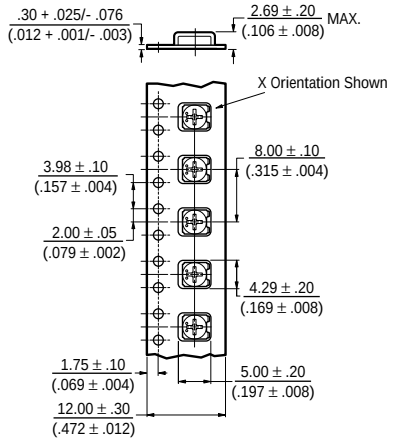

TAPE

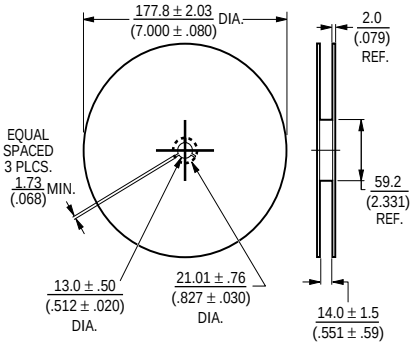

REEL

Meets EIA 481

Standard Resistance Table

Resistance (Ohms)	Part Marking Code	Resistance Code
10	A1	100
20	21	200
50	51	500
100	**A2**	**101**
200	**22**	**201**
500	**52**	**501**
1,000	**A3**	**102**
2,000	**23**	**202**
5,000	**53**	**502**
10,000	**A4**	**103**
20,000	**24**	**203**
50,000	**54**	**503**
100,000	**A5**	**104**
200,000	25	204
500,000	55	504
1,000,000	A6	105
2,000,000	26	205

Popular values listed in boldface. Special resistances available.

SHADED AREAS TYPICALLY NOT STOCKED BY DISTRIBUTORS AND NOT RECOMMENDED FOR NEW DESIGNS.

Specifications are subject to change without notice.

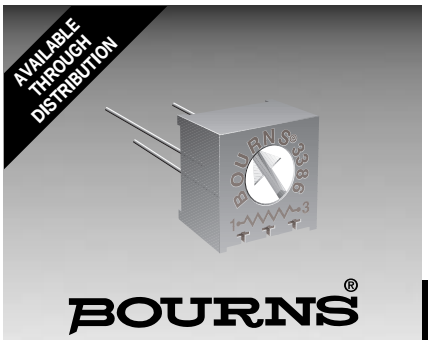

Features

- Single Turn / Cermet / Industrial / Sealed
- Available on tape and reel (see page 71 for details)
- Available with a knob for finger adjust
- Available with extended shaft
- Available with cross-slot rotor
- Top and side adjust types (F, P, H, W, X most popular)
- High voltage types available (see page 61 for details)

3386 - 3/8" Square Trimming Potentiometer

Electrical Characteristics

Standard Resistance Range
.....10 to 2 megohms
(see standard resistance table)
Resistance Tolerance .....±10% std.
(tighter tolerance available)
Absolute Minimum Resistance
.....2 ohms max.
Contact Resistance Variation
.....2% or 3 ohms max.
(whichever is greater)
Adjustability
Voltage .....±0.05%
Resistance .....±0.15%
Resolution.....Infinite
Insulation Resistance .....500 vdc.
1,000 megohms min.
Dielectric Strength
Sea Level .....900 vac
70,000 Feet .....350 vac
Adjustment Angle .....280° nom.

Environmental Characteristics

Power Rating (300 volts max.)
85°C.....0.5 watt
125°C.....0 watt
Temperature Range
.....-55°C to +125°C
Temperature Coefficient
.....±100ppm/°C
Seal Test .....85°C Fluorinert*
Humidity.....MIL-STD-202 Method 103
96 hours
(2% ΔTR, 10 Megohms min.)
Vibration.....30G (1% ΔTR; 1% ΔVR)
Shock.....100G (1% ΔTR; 1% ΔVR)
Load Life
.....1,000 hours 0.5 watt @ 70°C
(3% ΔTR; 1% or 1 ohm,
whichever is greater, CRV)
Rotational Life.....200 cycles
(4% ΔTR; 1% or 1 ohm,
whichever is greater, CRV)

Physical Characteristics

Mechanical Angle .....310° nom.
Torque .....5.0 oz-in. max.
Stop Strength.....15.0 oz -in. min.
Terminals .....Solderable pins
Weight .....0.03 oz.
Marking .....Manufacturer's
trademark, resistance code,
wiring diagram, date code,
manufacturer's model
number and style
Standard Packaging
.....50 pcs. per tube
Wiper Positioned at 50% Nominal
Adjustment Tool H-90

*"FLUORINERT" IS A REGISTERED TRADEMARK OF 3M CO.

Common Dimensions
Side Adjust

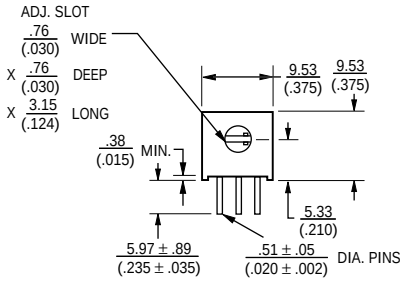

3386B

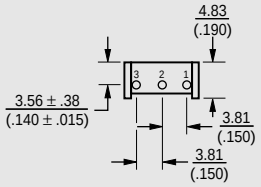

3386C

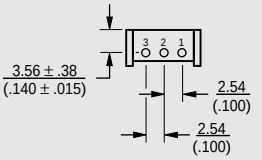

3386H

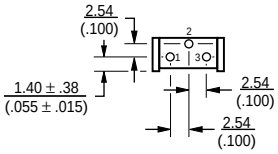

3386J

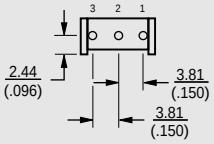

3386S

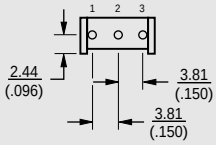

SHADED AREAS TYPICALLY NOT STOCKED BY DISTRIBUTORS AND NOT RECOMMENDED FOR NEW DESIGNS.

3386W

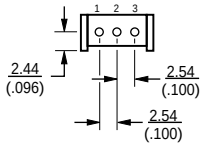

3386X

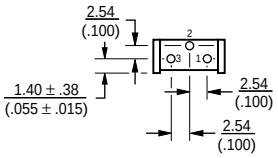

Standard Resistance Table

Resistance (Ohms)	Resistance Code
10	100
20	200
50	500
100	101
200	201
500	501
1,000	102
2,000	202
5,000	502
10,000	103
20,000	203
25,000	253
50,000	503
100,000	104
200,000	204
250,000	254
500,000	504
1,000,000	105
2,000,000	205

Special resistances available.

How To Order

3386 P - 1 - 103 T

Model
Style
Standard or Modified Product Indicator
-1 = Standard Product
-EY5 = Extended Shaft
Resistance Code
Optional Suffix Letter
T = Knob

Consult factory for other available options.

TOLERANCES: ± 0.25 (.010) EXCEPT WHERE NOTED

DIMENSIONS ARE: METRIC / (INCHES)

Common Dimensions
Top Adjust

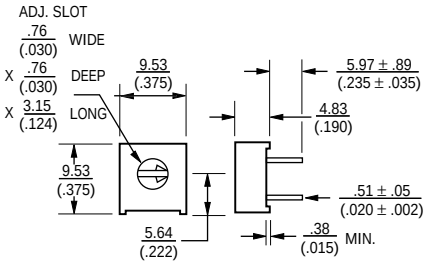

3386F

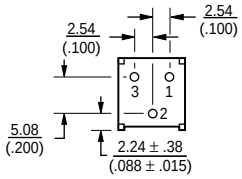

3386K

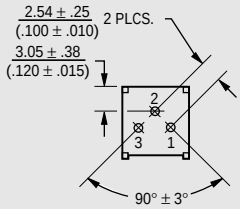

3386M

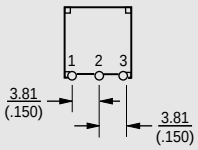

3386P

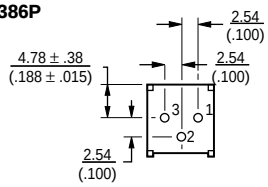

3386R

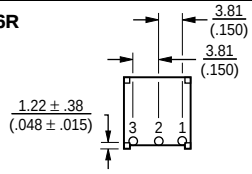

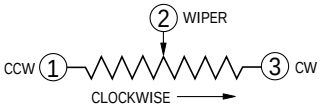

3386T

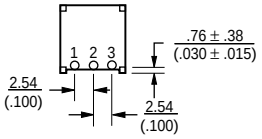

3386U

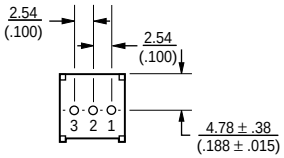

3386Y

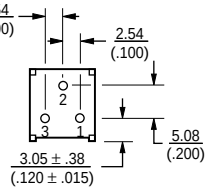

3386G

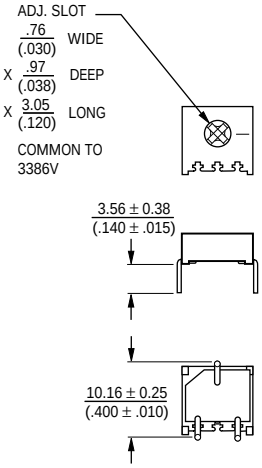

3386V

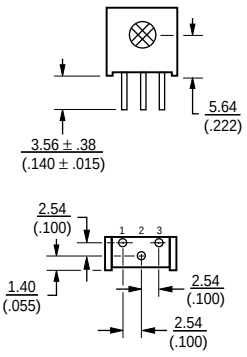

3386H-EY5
3386X-EY5 – SHOWN

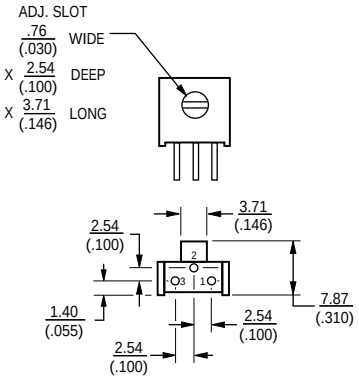

3386P-EY5

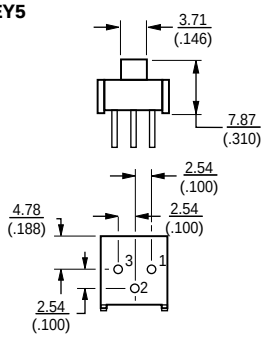

The Model 3386 is available with a knob for finger adjustment. Add suffix letter "T" to order code for F, P and X terminal styles.

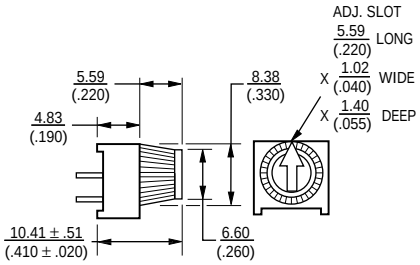

SHADED AREAS TYPICALLY NOT STOCKED BY DISTRIBUTORS AND NOT RECOMMENDED FOR NEW DESIGNS.

Specifications are subject to change without notice.

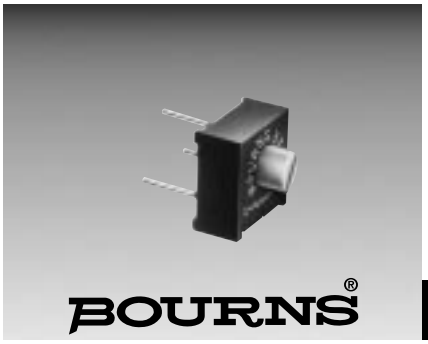

Features

- 3/8" Square / Single-Turn / Cermet Industrial / Sealed High Voltage Focus Control
- Designed for electrostatic focus control applications on monochrome or color CRTs
- Rated at 1KV D.C. and 600 VDC input voltage
- High stability cermet element
- Available with optional red knob

3386 HV2/3386 HV3 - 3/8" Trimming Potentiometer

Electrical Characteristics

Standard Resistance Range .....2.5 and 5 megohms
Resistance Tolerance .....±20%
Contact Resistance Variation .....2% max.
Adjustability
Voltage Divider.....±0.05%
Rheostat.....±0.15%
Resolution.....Infinite
Insulation Resistance @ 1KV D.C. .....1,000 megohms min.
Dielectric Strength (5,000 foot altitude) .....1.5 KV A.C. min.
Adjustment Angle .....280° nom.

Environmental Characteristics

HV2 Input Voltage
85°C .....(1 KVDC max.)
125°C.....0 watt
HV3 Input Voltage
85°C.....(600 VDC max.)
125°C.....0 watt
Temperature Range .....-55°C to +125°C
Temperature Coefficient .....±400ppm/°C
Humidity.....MIL-STD-202 Method 103
240 Hours (100 megohms min. IR)
Load Life
HV2 .....1,000 hours 1 KVDC
60°C, 90% R.H. (3% max. ΔTR)
HV3.....1,000 hours 600 VDC
60°C, 90% R.H. (3% max. ΔTR)
Voltage Breakdown (5,000 foot altitude) .....1.5 KV min.
Seal Test .....85°C Fluorinert*
Vibration .....No discontinuity 30G
Shock .....No discontinuity 100G
Rotational Life .....200 cycles min.

Physical Characteristics

Mechanical Angle .....310° nom.
Torque .....5.0 oz-in. max.
Stop Strength.....15.0 oz -in. min.
Terminals .....Solderable pins
Weight .....0.04 oz.
Marking .....Manufacturer's trademark, resistance code, wiring diagram, date code, manufacturer's model number and style
Flammability .....U.L. 94V-0
Standard Packaging .....50 pcs. per tube
Adjustment Tool H-90

3386N
Common Dimensions

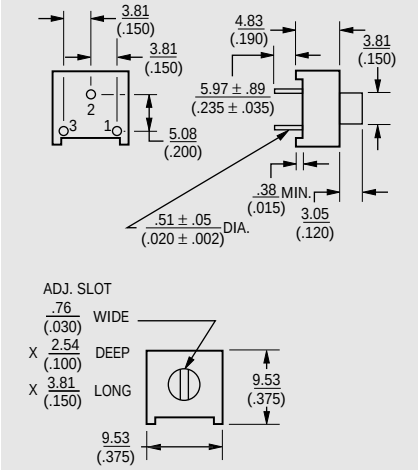

3386U

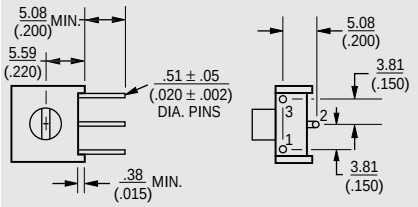

Typical Focus Control Circuits

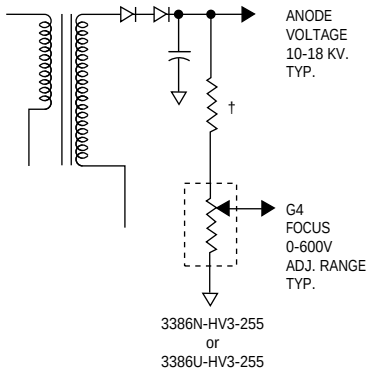

3386N-HV3-255
or
3386U-HV3-255

MONOCHROME
† VALUES DETERMINED BY CIRCUIT VOLTAGES

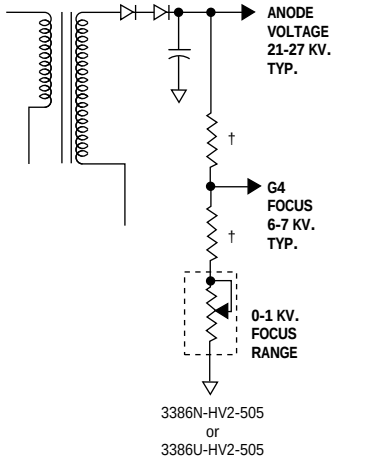

3386N-HV2-505
or
3386U-HV2-505

COLOR

How To Order

3386 N - HV2 - 505 T

Model
Style
High Voltage Construction Indicator
HV2 = 1000 VDC
HV3 = 600 VDC
Resistance Code
-255 = 2.5 megohms
-505 = 5 megohms
Optional Suffix Letter
T = Red Knob

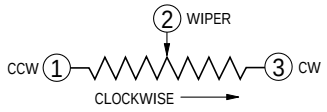

TOLERANCES: ± 0.25 (.010) EXCEPT WHERE NOTED

DIMENSIONS ARE: METRIC / (INCHES)

SHADED AREAS TYPICALLY NOT STOCKED BY DISTRIBUTORS AND NOT RECOMMENDED FOR NEW DESIGNS.

*"FLUORINERT" IS A REGISTERED TRADEMARK OF 3M CO.

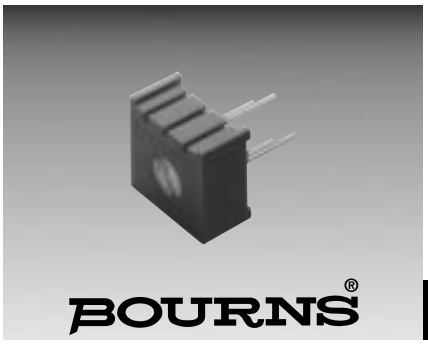

BOURNS®

Features

- Single-Turn / Cermet / Industrial / Sealed
- Designed for operational amplifier offset voltage adjustment applications
- Reduces power supply drift errors
- Unique center tapped trimming potentiometer
- Vertical adjust type available

3386-OT1 - 3/8" Square Trimming Potentiometer

Electrical Characteristics

Standard Resistance Range
.....100 ohms to 1 megohm
(see standard resistance table)
Resistance Tolerance .....±20% std.
Absolute Minimum Resistance
.....2 ohms max.
Voltage Output Variation.....±0.25%
Adjustability (VR) .....±0.025%
Insulation Resistance @ 500 vdc
.....1,000 megohms min.
Dielectric Strength
Sea Level .....900 vac
70,000 Feet.....350 vac
Effective Electrical Travel.....280° nom.
Center Tap Resistance .....2 ohms max.
Center Tap Electrical Center.....±5%
Center Tap Dead Band.....6°±4°

Environmental Characteristics

Power Rating
85°C.....0.5 watt
150°C.....0 watt
Temperature Range
.....-55°C to +150°C
Temperature Stability (ΔVR)
.....±0.5% max.
Seal Test .....85°C Fluorinert*
Humidity.....MIL-STD-202 Method 103
96 hours ±2%
ΔTR 10 Megohms min.
Vibration, 30G .....±1% ΔTR
Shock, 100G .....±1% ΔTR
Load Life, 1,000 Hours .....±3% ΔTR
Rotational Life, 200 cycles .....±4% ΔTR

Physical Characteristics

Mechanical Angle .....310° nom.
Torque .....5.0 oz-in. max.
Stop Strength.....15.0 oz-in. min.
Terminals.....Solderable pins
Weight .....0.03 oz.
Marking .....Manufacturer's trademark, resistance code, wiring diagram, date code, manufacturer's model number and style
Flammability .....U.L. 94V-0
Standard Packaging
.....50 pcs. per tube/tray
Adjustment Tool H-90

Also see Model 3296-OT1, page 30.

3386P-OT1

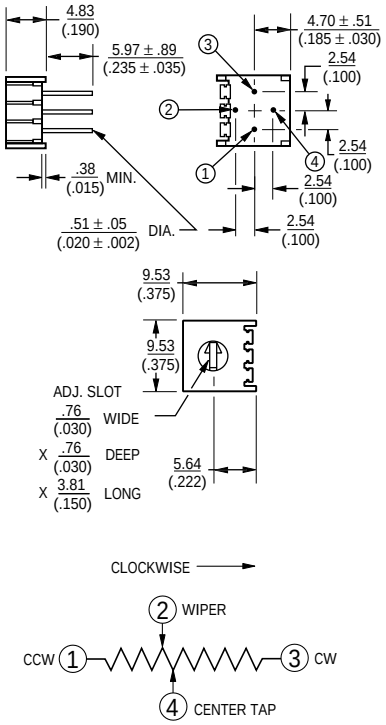

Standard Resistance Table

Resistance (Ohms)	Resistance Code
100	101
200	201
500	501
1,000	102
2,000	202
5,000	502
10,000	103
20,000	203
50,000	503
100,000	104
200,000	204
500,000	504
1,000,000	105

Popular values listed in boldface. Special resistances available.

SHADED AREAS TYPICALLY NOT STOCKED BY DISTRIBUTORS AND NOT RECOMMENDED FOR NEW DESIGNS.

TOLERANCES: ± 0.25 (.010) EXCEPT WHERE NOTED

DIMENSIONS ARE: METRIC / (INCHES)

Suggested Offset Voltage Adjustment Circuit

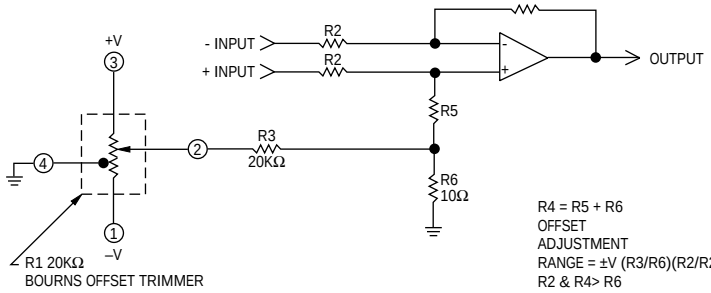

How To Order

3386 P - OT1 - 103

Model
Style
Catalog Product
Resistance Code

*"FLUORINERT" IS A REGISTERED TRADEMARK OF 3M CO.

Specifications are subject to change without notice.



Features

- High temperature plastic rotor
- Recommended for reflow processing
- Rotor design compatible with pick and place and automatic adjustment equipment
- Supplied in 8mm embossed tape, compatible with automatic assembly equipment
- Cermet element

Applications

- Car radios
- Color printers
- Cordless telephones
- CCD Camera control modules
- LCD modules

TC03 - Trimming Potentiometer

Electrical Characteristics

Standard Resistance Range
.....100 to 1 megohm
(see standard resistance table)
Resistance Tolerance .....±25% std.
Absolute Minimum Resistance
≤ 1K Ohms.....20 ohms max.
>1K Ohms .....2% max. of TR
Contact Resistance Variation
.....5% max.
Resolution.....Infinite
Adjustment Angle.....270° ±20°

Environmental Characteristics

Resistance to Soldering Heat
.....260°C, 10 seconds, TRS max. 5%
Power Rating (50 VDC max.)
70°C .....0.10 watt
Temperature Range
.....-40°C to +85°C
Temperature Coefficient
.....±250ppm/°C
Humidity 95%RH
500 hours
TRS max. .....±5%
Load Life
.....@ 70°C rated power 500 hours
TRS ±5%
Rotational Cycling.....20 turns
TRS ±15%

Physical Characteristics

Torque.....20-200g-cm max.
Mechanical Angle .....Continuous
Marking.....Part marking code
Standard Packaging
.....2000 pcs./7" reel

How To Order

TC03 X - 2 - 103 E

Model
Style
Orientation of Parts
In Tape:
Style X: Terminals Away From Sprocket Holes
Standard or Modified
Product Indicator
-2 = Cross Slot Rotor (Std. Product)
Resistance Code
Embossed Tape Designator

Consult factory for other available options.

TC03X-2
3mm Open Frame
for Reflow Soldering
3-Terminal

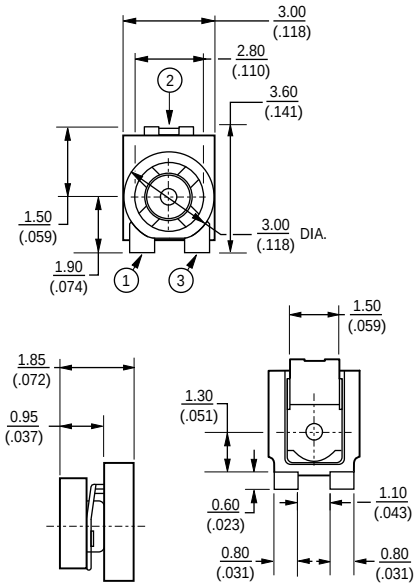

SUGGESTED PWB LAYOUT

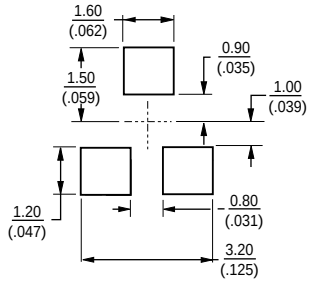

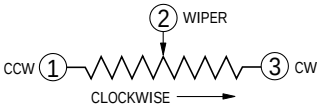

DIMENSIONS ARE: METRIC / (INCHES)

Standard Resistance Table

Resistance (Ohms)	Part Marking Code	Resistance Code
100	12	101
200	22	201
500	52	501
1,000	**13**	**102**
2,000	**23**	**202**
5,000	**53**	**502**
10,000	**14**	**103**
20,000	**24**	**203**
50,000	54	503
100,000	15	104
200,000	25	204
500,000	55	504
1,000,000	16	105

Popular values listed in boldface.

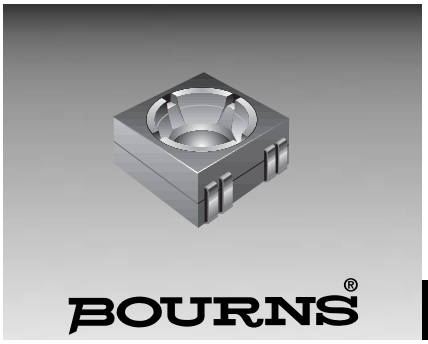

BOURNS®

Features

- Recommended for reflow processing
- Rotor design compatible with pick and place and automatic adjustment equipment
- Supplied in 8mm embossed tape, compatible with automatic assembly equipment
- Carbon element

Applications

- Audio car radios
- Satellite receivers - digital/analog
- Computer power supplies

TC73 - Trimming Potentiometer

Electrical Characteristics

Standard Resistance Range
.....500 to 1 megohm
(see standard resistance table)
Resistance Tolerance .....±30% std.
Absolute Minimum Resistance
≤ 1K Ohms.....20 ohms max.
>1K Ohms .....2% max. of TR
Contact Resistance Variation
.....5% max.
Resolution.....Infinite
Adjustment Angle.....260° ±20°(-2)

Environmental Characteristics

Resistance to Soldering Heat
.....240°C, 20 seconds, TRS max. 5%
Power Rating (50 VDC max.)
50°C .....0.05 watt
Temperature Range
.....-25°C to +85°C
Temperature Coefficient
.....±250ppm/°C
Humidity 95%RH
500 hours
TRS max. .....+15% to -2%
Load Life
.....@ 50°C rated power 500 hours
TRS ±5%
Rotational Cycling.....20 turns
TRS ±20%

Physical Characteristics

Torque.....10-150g-cm max.
Mechanical Angle
.....Continuous; 260° ± 20°
Marking.....Part marking code
Standard Packaging
.....2000 pcs./7" reel

Soldering Process

Hand Soldering ....Soldering Iron of 20W or less controlled at 280°C for about 3 sec. while applying solder
Reflow Soldering .....Peak temperature or reflow oven should be set to 240°C max.

Standard Resistance Table

Resistance (Ohms)	Part Marking Code	Resistance Code
500	52	501
1,000	**13**	**102**
2,000	**23**	**202**
5,000	**53**	**502**
10,000	**14**	**103**
20,000	**24**	**203**
50,000	54	503
100,000	15	104
200,000	25	204
500,000	55	504
1,000,000	16	105

Popular values listed in boldface.

TC73X/W-2

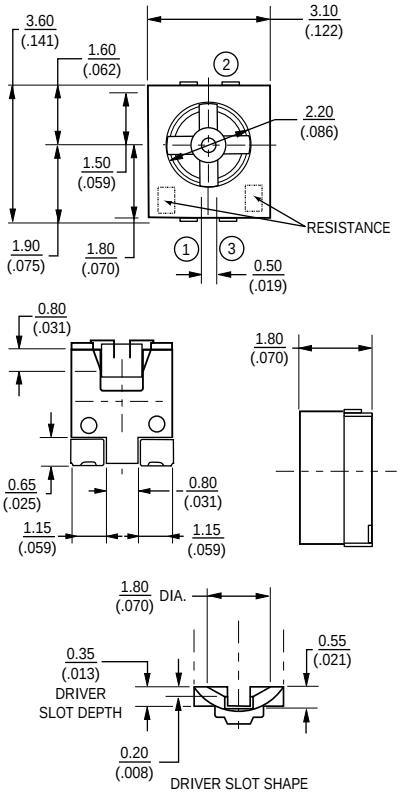

SUGGESTED PCB LAYOUT

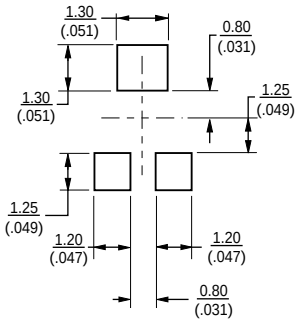

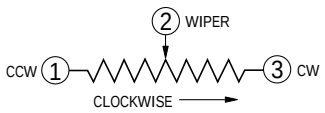

DIMENSIONS ARE: METRIC / (INCHES)

How To Order

TC73 X - 1 - 103 E

Model
Style
Orientation of Parts In Tape:
Style X: Terminals Away From Sprocket Holes
Style W: Terminals in direction to sprocket holes (preferred)
Standard or Modified Product Indicator
1 = Mechanical rotation stop (preferred)
2 = Continuous
Resistance Code
Embossed Tape Designator
E = 2000 pcs. per reel, 8mm tape

Consult factory for other available options.

Specifications are subject to change without notice.

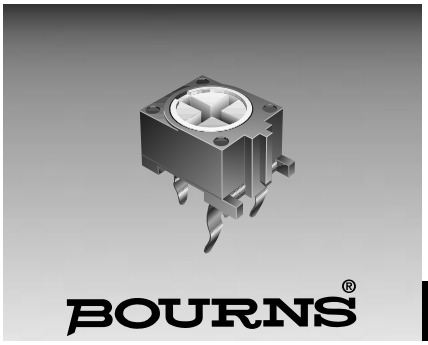

BOURNS®

Features

- Dust-resistant enclosure
- Polyester substrate
- Available on tape and reel for automatic insertion or in bulk for manual assembly
- Adjustable front/back, top/bottom
- Cross slot rotor design suitable for automatic adjustment equipment

Applications

- Power supplies
- Cordless phones
- Printer
- Television sets
- Audio equipment

TC76 - 6mm Carbon Trimming Potentiometer

Electrical Characteristics

Taper.....Linear
Standard Resistance Range.....100 ohms – 1megohm
Resistance Tolerance .....±30%
Maximum Voltage 100VDC
Standard Nominal Resistance Value.....See table
Residual Resistance .....≤ 2% (min. 10 ohms)
Equivalent Noise Resistance .....≤ 5%

Environmental Characteristics

Power Rating .....0.1 Watt @ 40°C
Operating Temperature.....-25°C to 70°C
Load Life .....1000 hours @ 40°C; 0.1W; ±10%
Mechanical Life (Cycles).....100 @ 10CPM; ±3% (Rn<1M)
Temperature Coefficient .....±300ppm
Thermal Cycling .....16 hours @ 85°C; 2h @ -25°C; ±5%
Damp Heat.....500 hours @ 40°C @ 95% HR; ±5%
Vibration .....2 hours @ 20g @ 10Hz…50Hz: ±2%

Physical Characteristics

Mechanical Angle.....280° ±10°
Electrical Angle .....245° ±25°
Rotational Torque .....0.2 to 3 Ncm
Stop-End Strength .....>3.5 Ncm

Packaging Specifications

R: Tape and Reel (W, N, G)

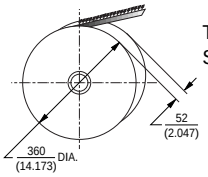

Top Adjust: 750pcs
Side Adjust: 1000pcs

A: Ammo Pack (W, N, G)

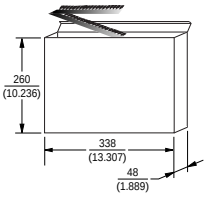

Top Adjust: 750pcs
Side Adjust: 1000pcs

Bulk (B, Z, P)

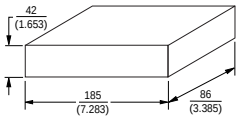

500pcs

How to Order

TC76 B - 1 - 102 __

Model
Style
See drawings (B, Z preferred)
Standard or Modified
Product Indicator
-1 = Standard Product
Resistance Code
Optional Packaging Designator
(Standard = Bulk)
R = Tape & Reel (W, N, G)
A = Ammo Pack - preferred (W, N, G)

Standard Resistance Table

Resistance (Ohms)	Resistance Code
100	101
200	201
500	501
1,000	102
2,000	202
5,000	502
10,000	103
20,000	203
50,000	503
100,000	104
200,000	204
500,000	504
1,000,000	105

SHADED AREAS TYPICALLY NOT STOCKED BY DISTRIBUTORS AND NOT RECOMMENDED FOR NEW DESIGNS.

Adjustment Details

Top Adjust Styles G, N, P and Z

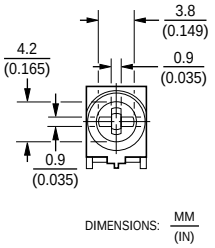

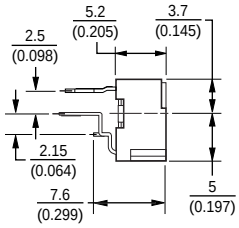

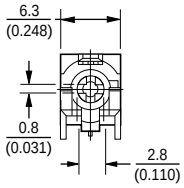

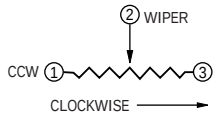

Side Adjust Styles B and W

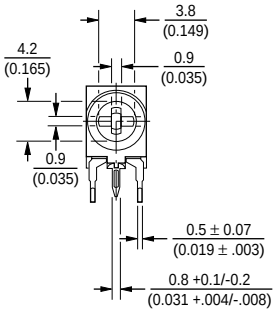

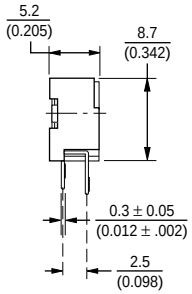

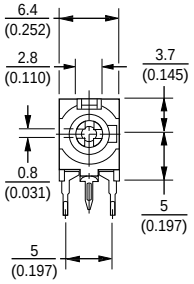

TC76 - 6mm Carbon Trimming Potentiometer

Taped Model TC76W

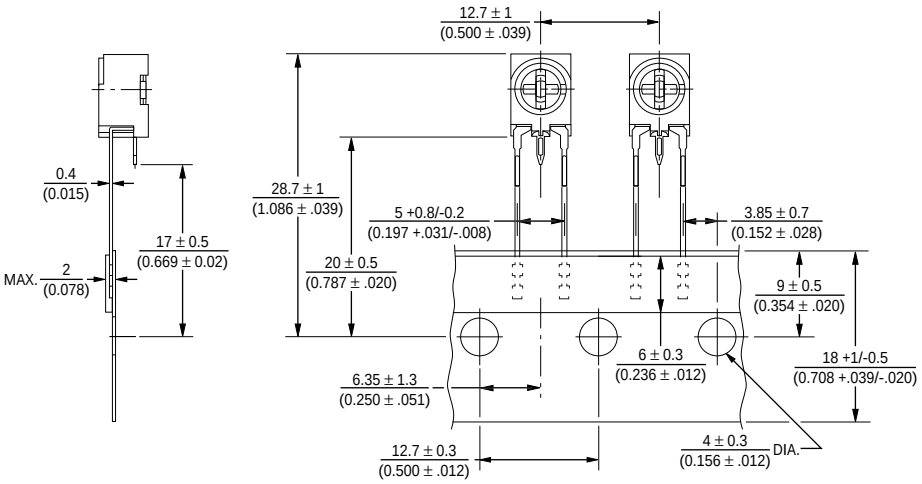

PCB Layout

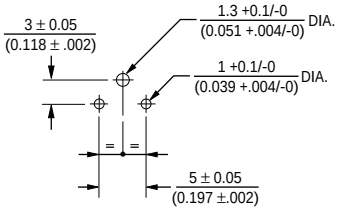

DIMENSIONS: MM / (IN)

Taped Model TC76N (Preferred)

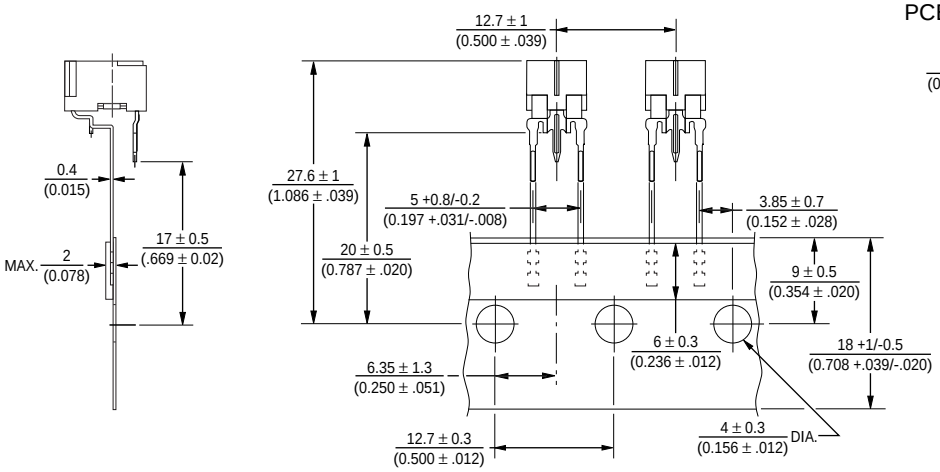

PCB Layout

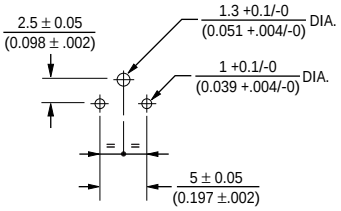

Taped Model TC76G

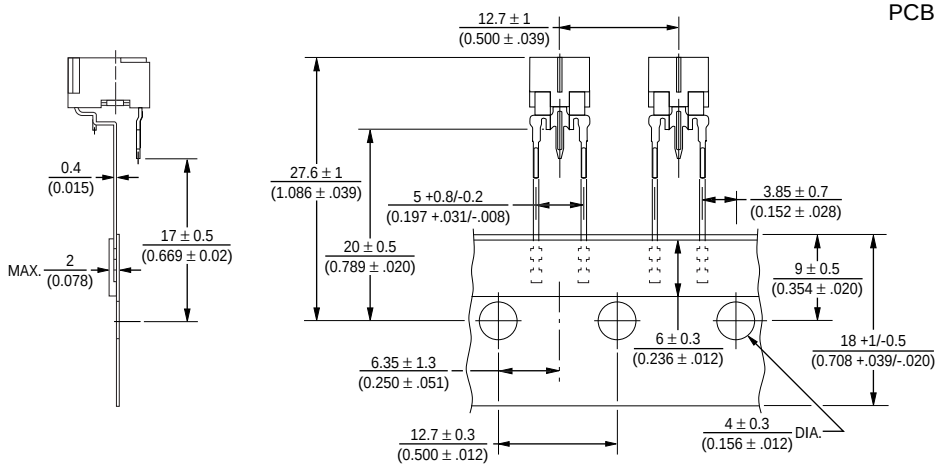

PCB Layout

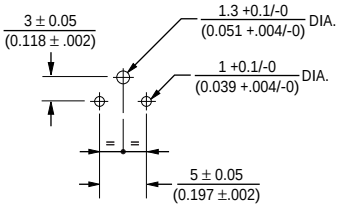

Specifications are subject to change without notice.

TC76 - 6mm Carbon Trimming Potentiometer

Through-hole Model TC76B preferred

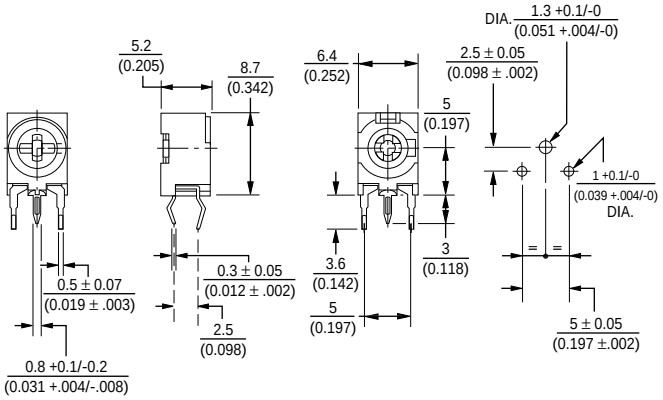

Through-hole Model TC76Z preferred

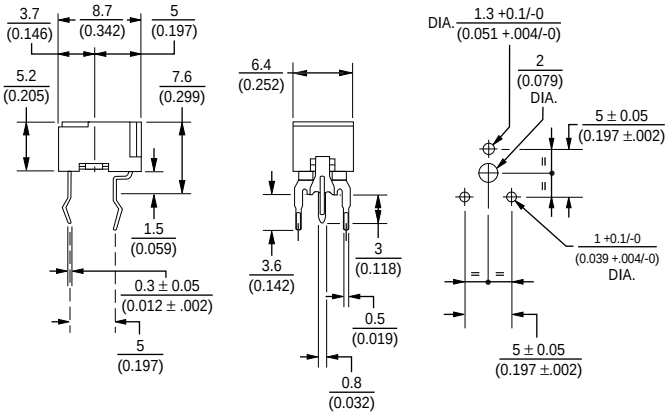

Through-hole Model TC76P

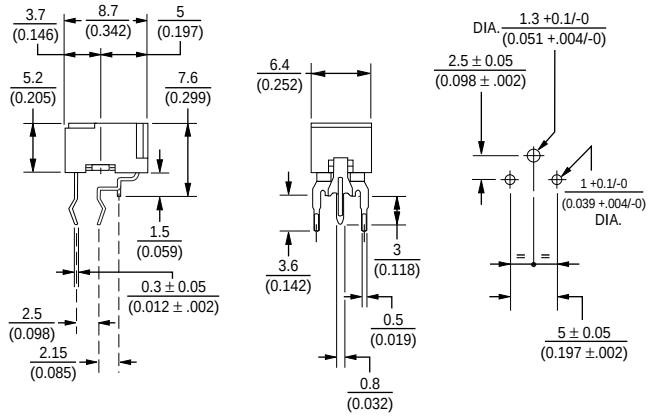

Crimped Terminals detail

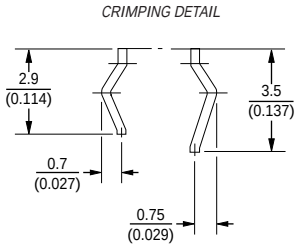



Features

- Dimensions of 6, 8 and 10mm
- Carbon element
- Open frame construction
- Vertical or horizontal adjustment

Applications

- Television sets
- Low cost receivers

TDB06/TDB08/TDB10 - Trimming Potentiometer

Electrical Characteristics

Taper .....B (linear)
Standard Resistance Range
.....500 ohms to 1M ohm
(see standard resistance table)
Resistance Tolerance .....±30% std.
Nominal Resistance Value
.....See standard resistance table
Residual Resistance
.....Max. 100 ohms or ±5%

Environmental Characteristics

Power Rating
TDB06 .....0.05 watt
TDB08/10 .....0.1 watt
Temperature .....+5% and -30% resistance change after 5 hours at 70°C
Load .....5% resistance change max. after 3 hours rated load
Humidity ...15% resistance change max. after 5 hours in 95% RH at 40°
Load Life...20% resistance change max. after rated load for 350 hours in 90% RH at 40°

Physical Characteristics

Mechanical Angle.....280° ± 20°
Rotational Torque.....20 - 300 gcm
Stop-End Strength .....0.5 kgcm min.
Mechanical Strength Base ..1 kgcm min.
Contact Force .....20g min.
Rotational Life .....15% resistance change max. after 100 rotational life tests
Soldering Condition .....260°C max. within 3 seconds

How To Order

TDB 08 - 3 103

Model
Size
- 06 = 6.5mm
- 08 = 8mm
- 10 = 10mm

Pin/Housing Style (Refer to drawing)
Resistance Code (See table)

Consult factory for other available options.

TDB06-5
TDB08-5
TDB10-4

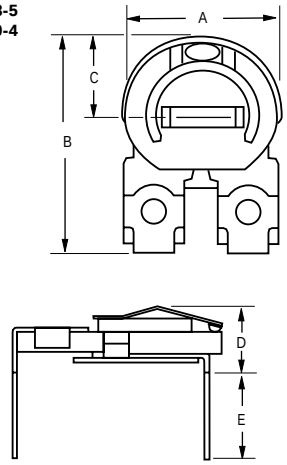

RECOMMENDED PCB LAYOUT

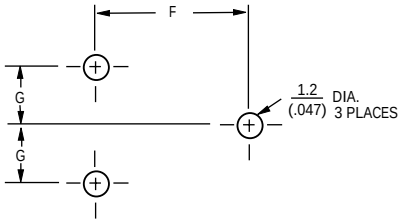

Dimensions

	TDB-06-5	TDB-08-5	TDB-10-4
A	6.6	8	10
	.260	.315	.394
B	7.2	11	15.3
	.283	.433	.602
C	3.6	4	7.3
	.142	.157	.278
D	3	4	5
	.118	.157	.197
E	3.8	4	4
	.150	.157	.157
F	6.9	10	15
	.272	.394	.590
G	2.5	2.5	3.5
	.089	.089	.138

Standard Resistance Table

Resistance (Ohms)	Resistance Code
500	501
1,000	102
2,000	202
5,000	502
10,000	103
20,000	203
50,000	503
100,000	104
200,000	204
500,000	504
1,000,000	105

TDB06-6
TDB08-3
TDB10-8

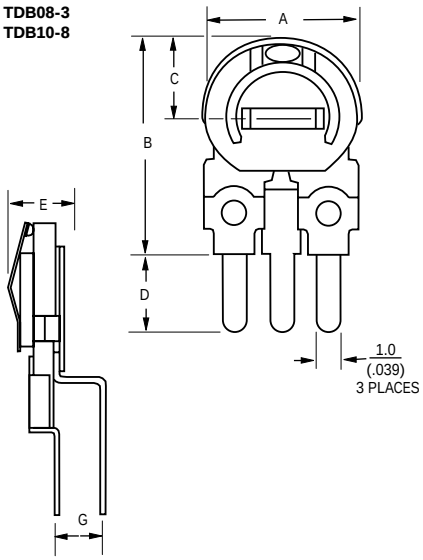

RECOMMENDED PCB LAYOUT

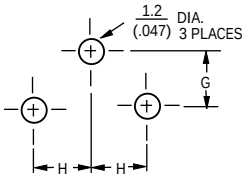

Dimensions

	TDB-06-6	TDB-08-3	TDB-10-8
A	6.6	8	10
	.260	.315	.394
B	7.2	11	15.3
	.283	.433	.602
C	3.6	4	7.3
	.142	.157	.278
D	3.5	4	7
	.138	.157	.275
E	2.3	3	3.5
	.090	.118	.138
F	2.5	2.5	1
	.089	.089	.039
G	2.5	2.5	1
	.089	.089	.039
H	2.5	2.5	5
	.089	.089	.197

DIMENSIONS ARE: METRIC / (INCHES)

Specifications are subject to change without notice.

Optional Products

BOURNS®

These optional trimmer products are not recommended for new designs. However, if you require technical specifications, contact a Bourns representative in your area.

Model Number	Product	Mounting		Size	Circuit Board Layout
		Surface Mount	Through-Hole		
3005			•	3/4” rectangular	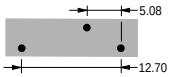
3009			•	3/4” rectangular	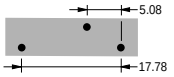
3082			•	1/2” rectangular	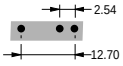
3345			•	1/2” round	
3373		•		3mm square	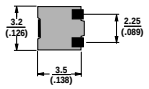

Model Number	Turns		Sealing	Element Tech.	Resistance Range	Power Rating	Tolerance	Mechanical Turns	Adjust	Temp. Range
	Single	Multi								
3005		•	Sealed	Wirewound	10 ohms to 50K ohms	70°C - 1.0 watts 125°C - 0 watt	±10%	20	Side	-65°C - +125°C
3009		•	Sealed	Cermet	10 ohms to 5 megohms	@ 400 volts max. 70°C - 0.75 watts 150°C - 0 watt	±10%	15	Side	-55°C - +150°C
3082		•	Sealed	Cermet	10 ohms to 2 megohms	@ 400 volts max. 85°C - 0.3 watts 150°C - 0 watt	±10%	10	Side	-65°C - +150°C
3345	•		Sealed	Wirewound	10 ohms to 50K ohms	70°C - 1.0 watts 150°C - 0 watt	±5%	1	Top, Side	-55°C - +150°C
3373	•		Sealed	Cermet	10 ohms to 2M ohms	70°C - .125 watts 125°C - 0 watt	±25%	1	Top, Side	-55°C - +125°C

Specifications are subject to change without notice.

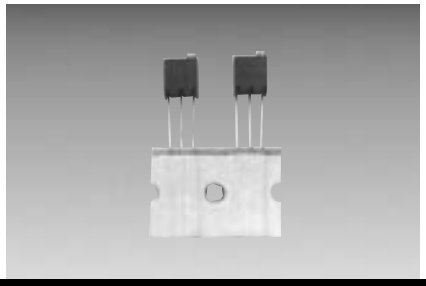

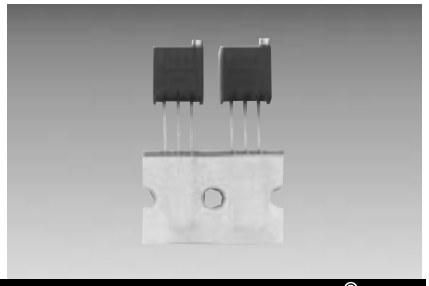

Tape and Reel Packaging Specifications

BOURNS®

Now there is a full assortment of Trimpot® Potentiometer models on tape and reel or ammo pack packaging.

- These models are available taped and packaged per EIA Standard 468.
- All models have been tested for compatibility with popular radial insertion machine models on the market today.

How To Order

3362 M - 1 - 103 R

- Model
- Style
- Standard Product
- Resistance Code
- Tape & Reel
  - Designator: Use “R” for Tape & Reel
  - Use “A” for Ammo Pack



3266*

Product specifications and standard resistance values, page 20.

SIDE ADJUST
3266Z-1-(RC)R

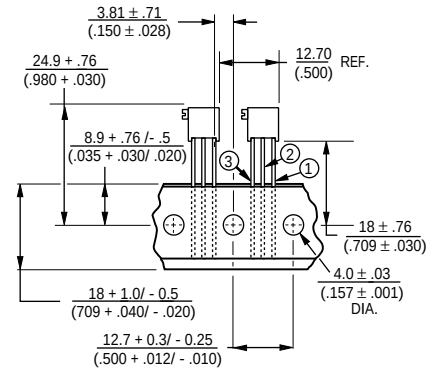

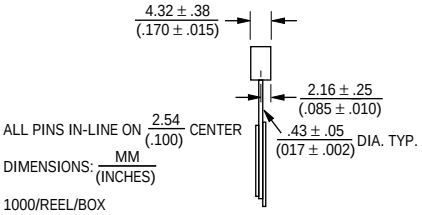

1000/REEL/BOX

TOP ADJUST
3266Y-1-(RC)R

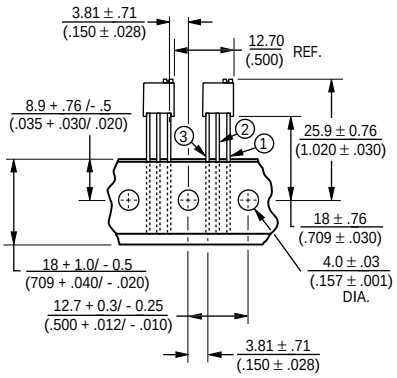

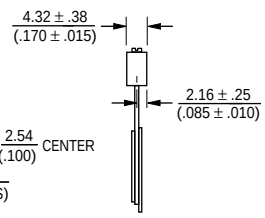

1000/REEL/BOX

3296*

Product specifications and standard resistance values, page 26.

SIDE ADJUST
3296X-1-(RC)R

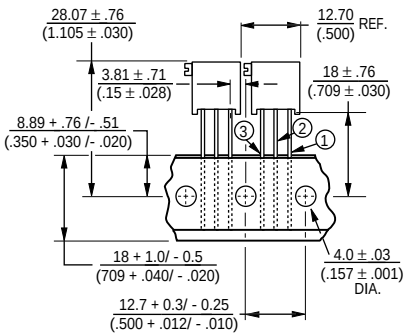

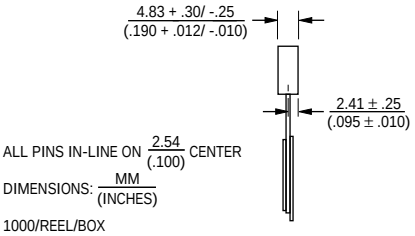

1000/REEL/BOX

TOP ADJUST
3296W-1-(RC)R

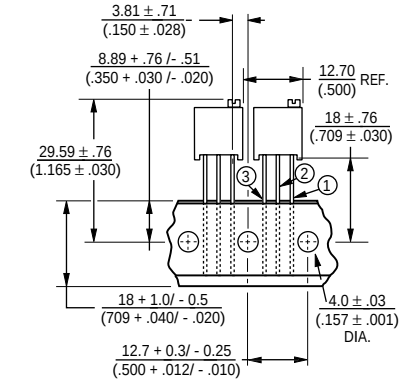

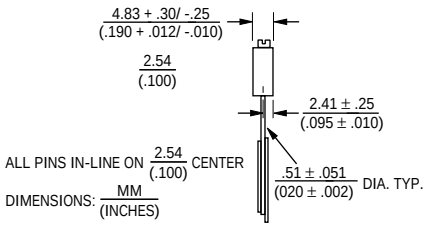

1000/REEL/BOX

Specifications are subject to change without notice.
*Patented models.

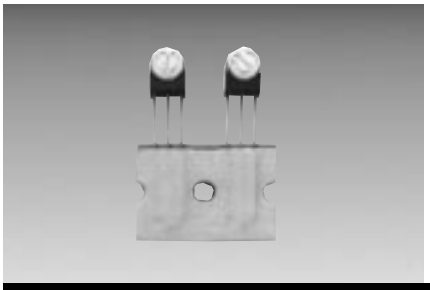
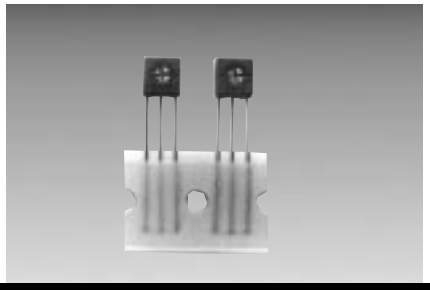
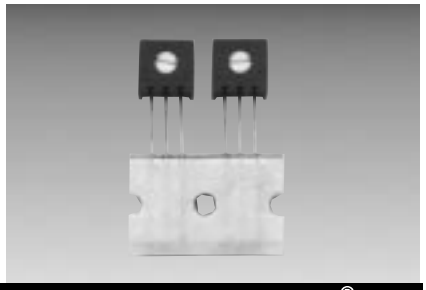

Tape and Reel Packaging Specifications

BOURNS®

3329

Product specifications and standard resistance values, page 51.

SIDE ADJUST
3329M-1-(RC)R

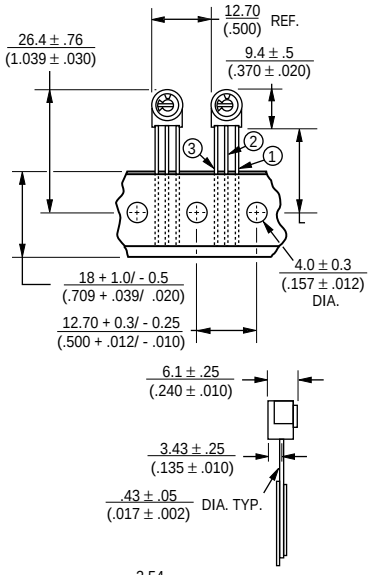

ALL PINS IN-LINE ON 2.54 (.100) CENTER

DIMENSIONS: MM (INCHES)

1000/REEL/BOX

TOP ADJUST
3329U-1-(RC)R

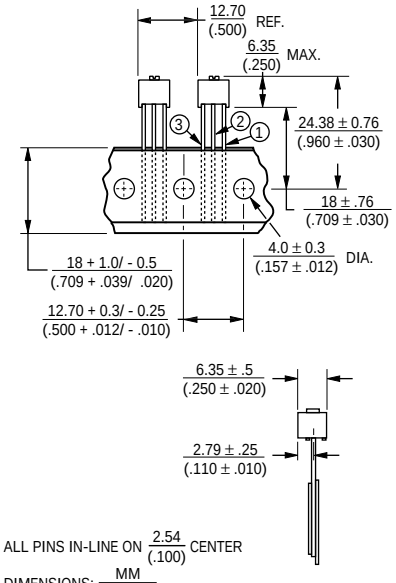

ALL PINS IN-LINE ON 2.54 (.100) CENTER

DIMENSIONS: MM (INCHES)

1000/REEL/BOX

3362

Product specifications and standard resistance values, pages 54 & 55.

SIDE ADJUST
3362M-1-(RC)R

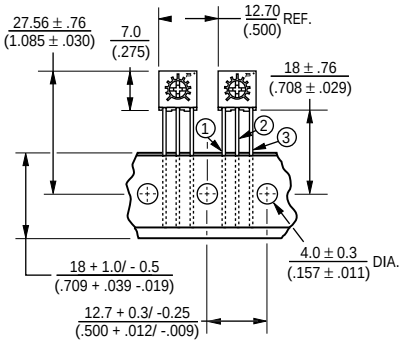

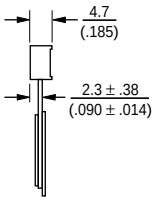

ALL PINS IN-LINE ON 2.54 (.100) CENTER

DIMENSIONS: MM (INCHES)

1000/REEL/BOX

TOP ADJUST
3362U-1-(RC)R

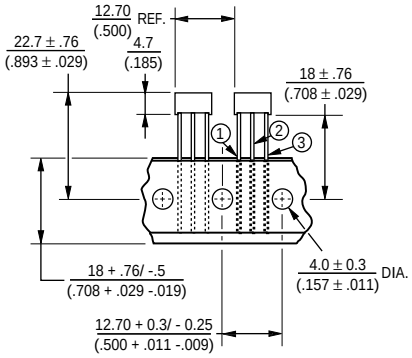

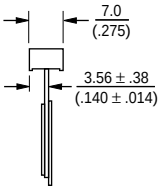

ALL PINS IN-LINE ON 2.54 (.100) CENTER

DIMENSIONS: MM (INCHES)

750/REEL

3386

Product specifications and standard resistance values, pages 59 & 60.

SIDE ADJUST
3386W-1-(RC)R

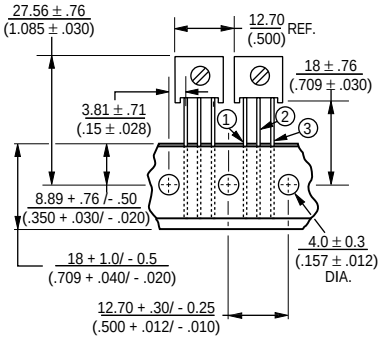

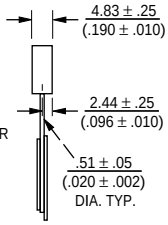

ALL PINS IN-LINE ON 2.54 (.100) CENTER

DIMENSIONS: MM (INCHES)

1000/REEL/BOX

TOP ADJUST
3386U-1-(RC)R

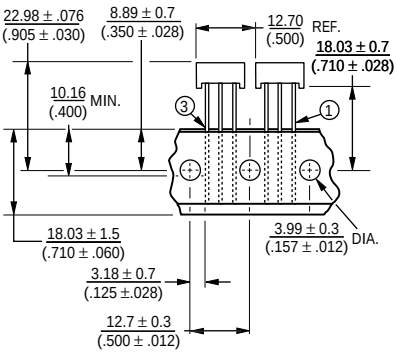

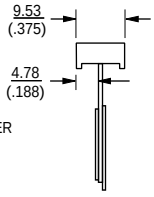

ALL PINS IN-LINE ON 2.54 (.100) CENTER

DIMENSIONS: MM (INCHES)

1000/REEL/BOX

Specifications are subject to change without notice.

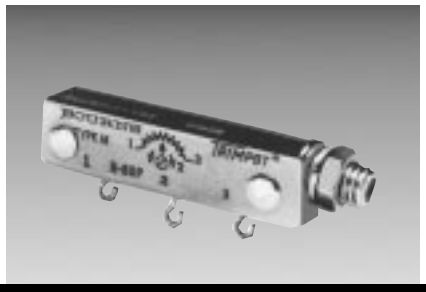

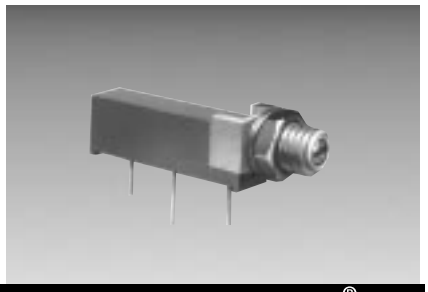

Factory Installed Panel Mount

BOURNS®

TRIMPOT® POTENTIOMETER PANEL MOUNTING OPTIONS AND HARDWARE

Many Trimpot® Potentiometers are available for panel mount application.

This product option provides for maximum design flexibility.

To order Trimpot® Potentiometers with panel mount hardware attached by the factory, simply add an “M” or “Z” suffix to the Bourns part number per Table I, page 75.

Example:
3006P-1-100Z

To order military Trimpot® Potentiometers with panel mount hardware attached by the factory, order the military part number and add “with panel mount attached.”

Example:
RT12C2PRC, with panel mount attached.

To order panel mounting accessories for customer installation, simply use the part number per Table II, page 75.

Example:
H83P

NOTE: For complete product specifications, see catalog page for the trimmer model.

Torque - Apply maximum 8 in. lbs. on mounting nut when mounted on panel.

Models RT12/RJ12, 3057/3059

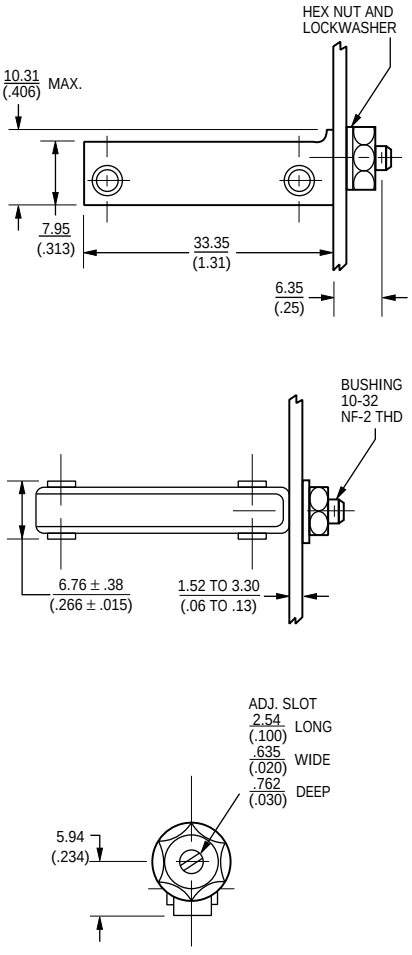

NOTES:

1. PROVIDED WITH LOCKWASHER AND MOUNTING NUT.
2. RECOMMEND PANEL HOLES. #10 DRILL .194 (.008)

Models 3005/3006/3009

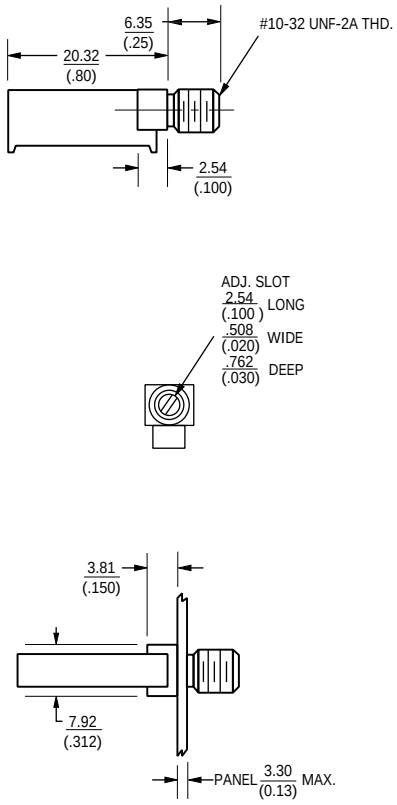

NOTES:

1. PROVIDED WITH LOCKWASHER AND MOUNTING NUT.
2. RECOMMEND PANEL HOLE SIZE #7 DRILL .200 (.008)







Factory Installed Panel Mount

BOURNS®

Models 3292

X, L and W Styles

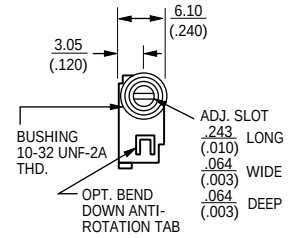

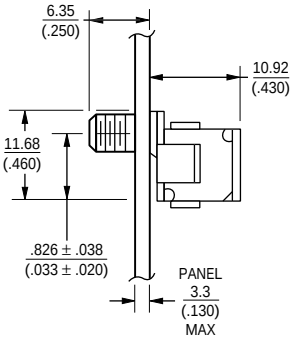

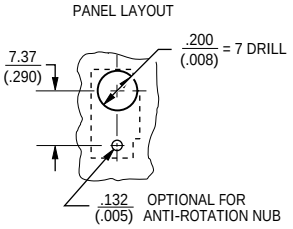

NOTES:

1. PROVIDED WITH LOCKWASHER AND MOUNTING NUT.

Models RT22/RTR22/RJ22 3250/3252

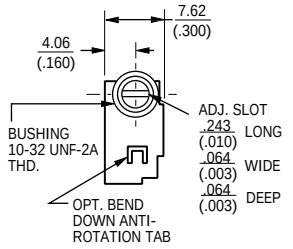

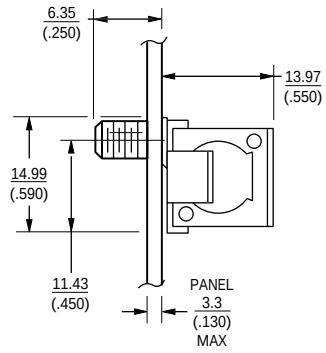

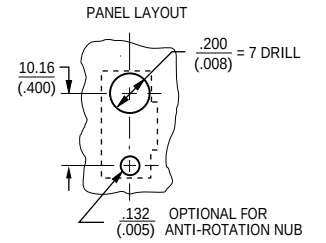

NOTES:

1. PROVIDED WITH LOCKWASHER AND MOUNTING NUT.

Models RT24/RTR24/3290

H and W Styles - 3290 X & W Styles-
RT24/RTR24

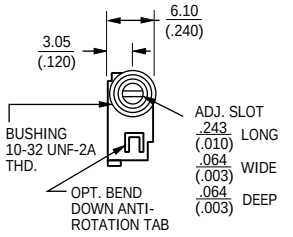

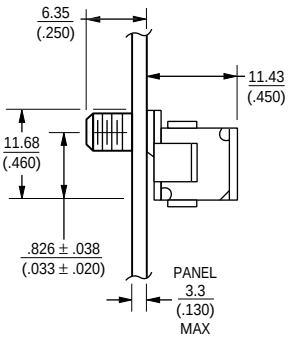

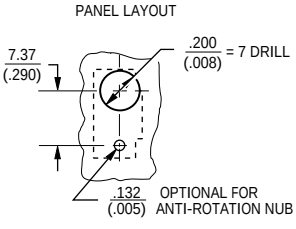

NOTES:

1. PROVIDED WITH LOCKWASHER AND MOUNTING NUT.

Specifications are subject to change without notice.

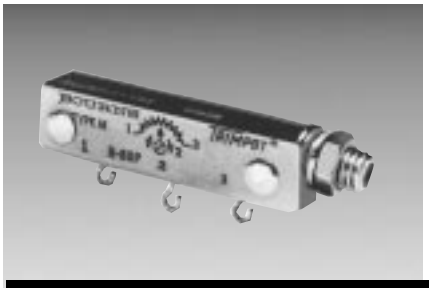

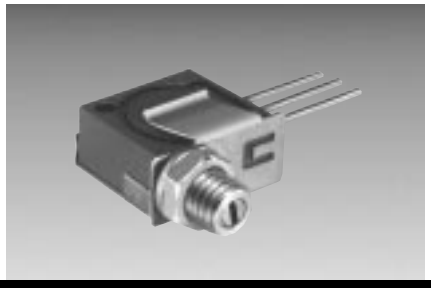



Customer Installed Panel Mount - Unsealed

BOURNS®

SEE TABLE II (PAGE 75) FOR PANEL MOUNT PART NUMBER

H-58P Panel Mount

1-1/4 Inch Rectangular
Multiturn Modules

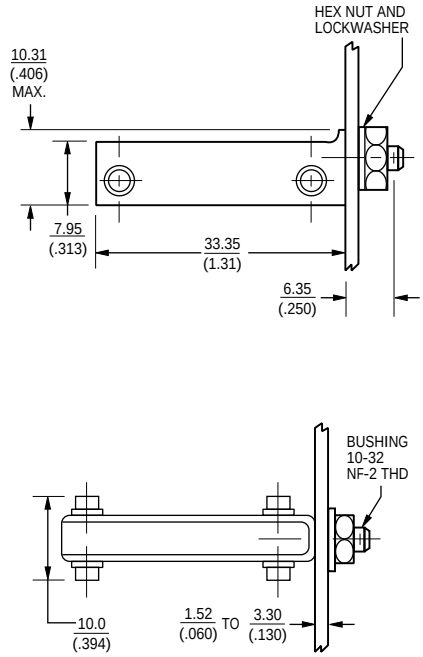

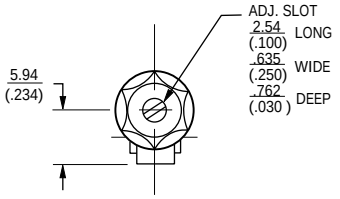

NOTES:

1. PROVIDED WITH LOCKWASHER AND MOUNTING NUT.
2. RECOMMEND PANEL HOLES. #10 DRILL .194 (.008)

*SPECIFY H82 IF PANEL SEAL IS REQUIRED.

H-65P Panel Mount

1/2 Inch Square
Multiturn Models

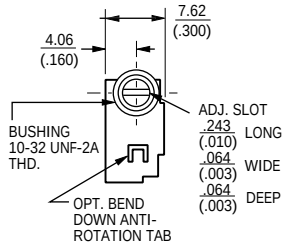

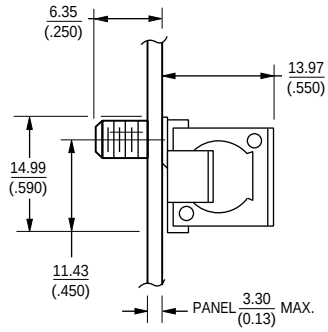

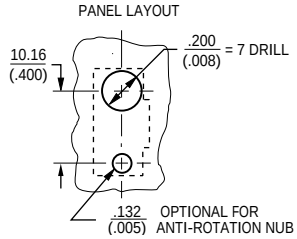

NOTES:

1. PROVIDED WITH LOCKWASHER AND MOUNTING NUT.
2. DRAWINGS SHOWN WITH TRIMMER. ORDER PART SEPARATELY

H-83P Panel Mount

Adapter for Models 3005 AND 3006

The H-83P Adapter is used with Models 3005 (page 69) and 3006 (page 9). Order separately and simply snap fit the trimmer in the plastic case. The H-83P with lock-washer and mounting nut is available in 50-piece lots.

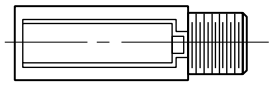

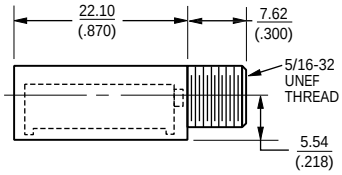

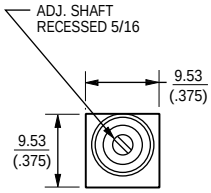

NOTES:

1. DRAWINGS SHOWN WITH TRIMMER. ORDER PART SEPARATELY



Customer Installed Panel Mount

BOURNS®

3/8 Inch Square Multiturn Models

H-114P/115P/116P Panel Mount

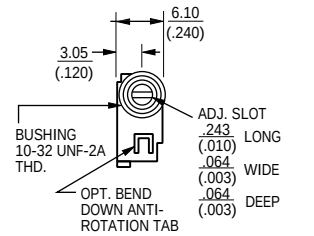

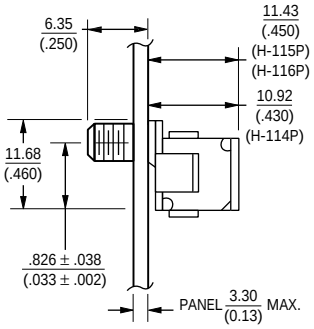

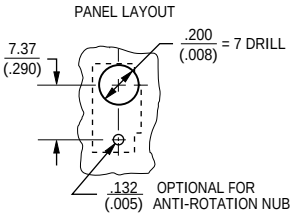

NOTES:

1. PROVIDED WITH LOCKWASHER AND MOUNTING NUT.
2. DRAWINGS SHOWN WITH TRIMMER. ORDER PART SEPARATELY

TABLE I
FACTORY INSTALLED PANEL MOUNTS

STANDARD PART NO.	PART NO. WITH PANEL MOUNT
3005P-1-(RC)	3005P-1-(RC) Z
3006P,Y, or W-1-(RC)	3006P,Y, or W-1-(RC) Z
3009P or Y-1-(RC)	3009P or Y-1-(RC) Z
3057L,J,P, or Y-1-(RC)	3057L,J,P, or Y-1-(RC) M
3059L,J,P, or Y-1-(RC)	3059L,J,P, or Y-1-(RC) M
3250L or W-1-(RC)	3250L or W-1-(RC) M
3252L or W-1-(RC)	3252L or W-1-(RC) M
3290 H or W-1-(RC)	3290H or W-1-(RC) M
3292L,W, or X-1-(RC)	3292L,W, or X-1-(RC) M

TABLE II
RETRO-FIT PANEL MOUNTS FOR INSTALLATION BY CUSTOMER

STANDARD PART NO.	ORDER PANEL MOUNT PART NO.
3005P-1-(RC)	H-83P
3006P,Y, or W-1-(RC)	H-83P
3057L,J,P, or Y-1-(RC)	H-58P* SCREW ASSEMBLY
3059L,J,P, or Y-1-(RC)	H-58P* SCREW ASSEMBLY
3250L, W, X-(RC)	H-65P-1*
3252L or W-1-(RC)	H-65P-3*
3252X-1-(RC)	H-65P-5*
3290 H or W-1-(RC)	H-114P*
3292L-1-(RC)	H-115P*
3292W OR X-1-(RC)	H-116P*
RT12P,Y,L	H-58P* SCREW ASSEMBLY
RJ12L,P,Y	H-58P* SCREW ASSEMBLY
RT22L,W, X, RTR22L,W, X	H-65P-1*
RJ22L,W	H-65P-3*
RJ22X	H-65P-5*
RT24W / RTR24W OR X	H-114P*
RJR24W OR X	H-116P*

*Specify H-82 if panel seal is required.

Specifications are subject to change without notice.

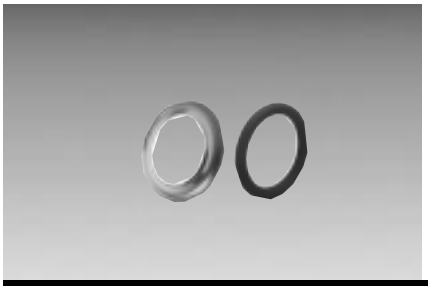

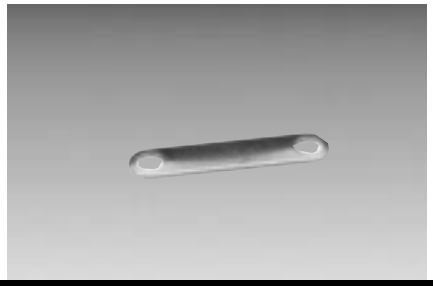

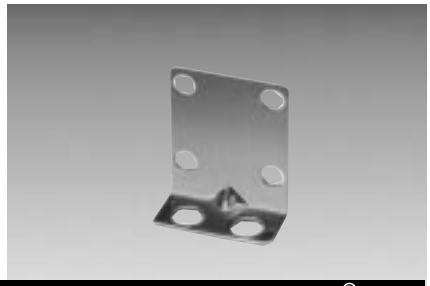

Hardware For Special Mounting Applications

BOURNS®

H-82 Panel Seal

For all panel mounts with size 10-32 bushings.

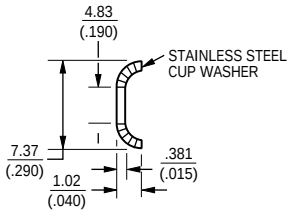

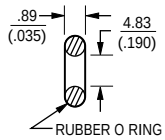

To be used with the following to provide panel seal:

- H-58P
- H-65P-1
- H-65P-3
- H-65P-5
- H-114P
- H-115P
- H-116P

H-25/H-28 Stacking Straps

Models 3250, 3252 (H-25) and 3292 (H-28).

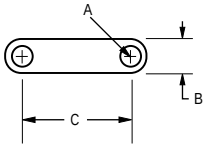

DIMENSIONS	H-25	H-28
A	.236 (.093)	.178 (.070)
B	.363 (.143)	.318 (.125)
C	1.321 (.520)	1.064 (.419)
THICKNESS	.51 (.02)	

H-26S Side Bracket

Models 3250 and 3252
This hardware is available for special mounting applications.

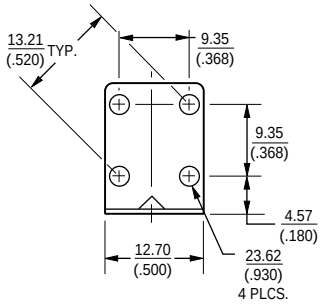

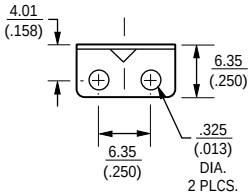

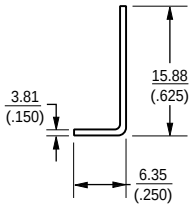

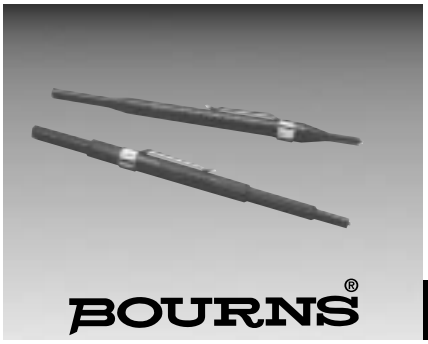

Features

- Meets UL 94V-0
- Pocket clip
- For use on most trimmer shafts/rotors
- Recessed end for use with extended shafts

H-90/H-91 - Adjustment Tools

H-90

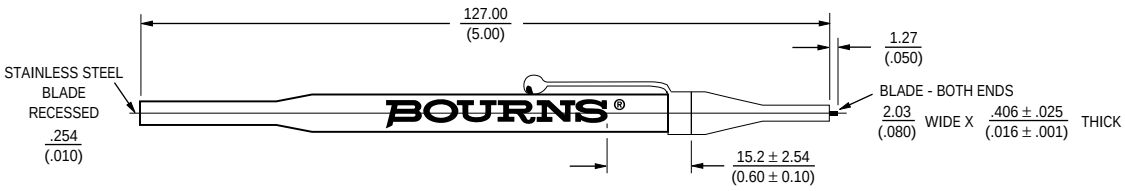

H-91*

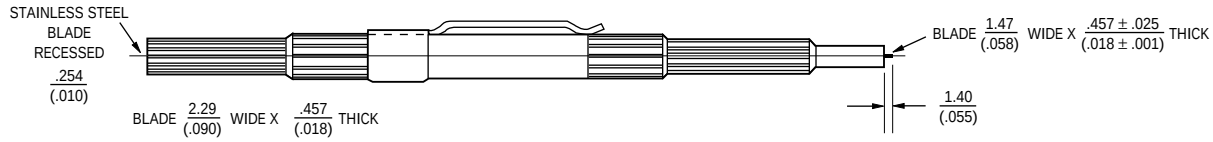

***H-91 RECOMMENDED FOR USE WITH TRIMMER MODELS 3224 AND 3214.**



- Wide assortment of popular trimmers
- Convenient, easy-to-use packaging
- Single-turn and multiturn styles
- Many configurations in both cermet and wirewound element types

H-800 TrimBin™ Trimmer Lab Design Kit

A complete assortment of the most popular through-hole trimmer styles from Bourns Trimpot is contained in one convenient package. The kit contains 126 parts representing 50 varieties of resistances and pin styles.

Select the size, shape, type of element, and method of adjustment to suit your application.

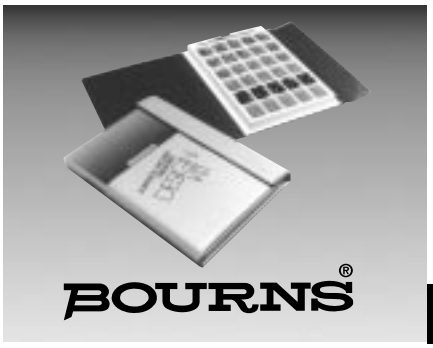

- Full line of surface mount products
- Convenient, easy-to-use packaging
- Single-turn, multiturn, sealed, open-frame styles
- Popular styles and ohmic values

H-814 Surface Mount Lab Design Kit

A complete assortment of the most popular surface mount products from Bourns Trimpot is contained in this convenient lab design kit. It contains 220 parts in popular styles and resistance values to help in your design selection.

Also included are complete performance parameters and specifications for each model in the kit. Plus, a convenient Adjustment Tool.

Specifications are subject to change without notice.



Features

- High intensity Xenon beam
- Two tool tip sizes
- Red and blue/green vision aid lenses
- Approved for hazardous location use

H-200 - Adjustment Tool with a Light

TrimBeam™

Makes It Easy to See and Access Small Electronic Components

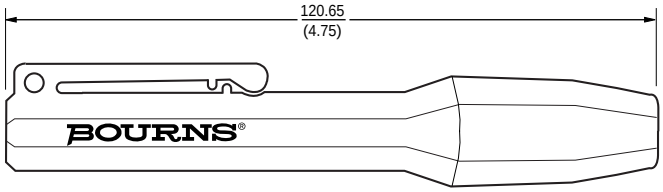

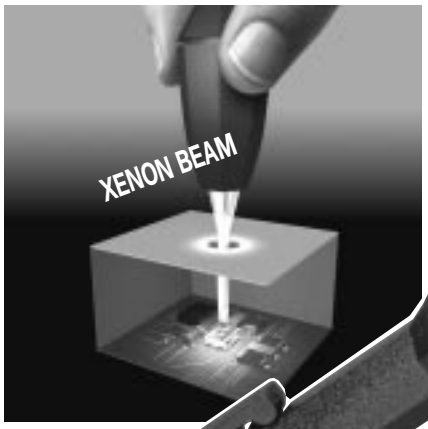

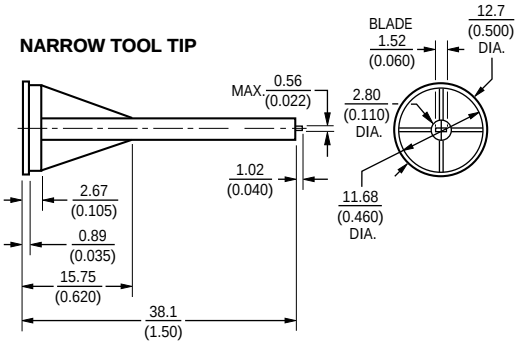

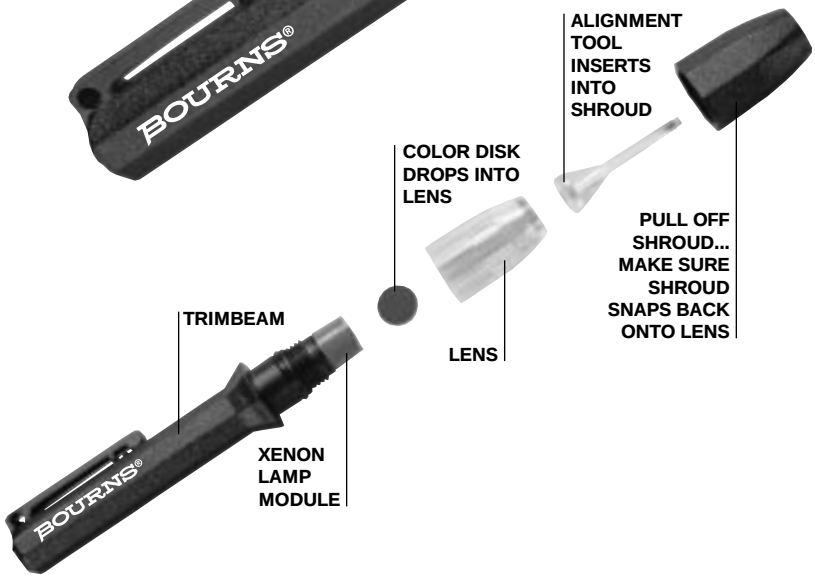

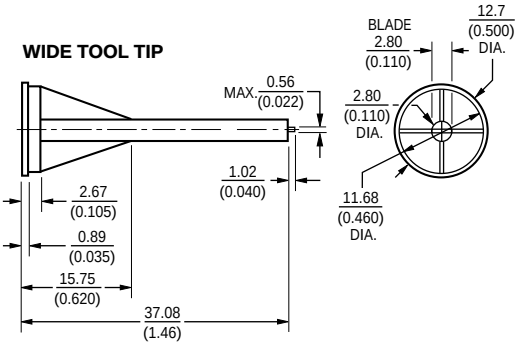

FM CSA CENELEC

Mil-Spec Numbering System - Defined

BOURNS®

Non-Wirewound RJ Styles

MIL-R-22097 **RJ24 F W 103**

Style

Characteristic
- T.C. Max. ±100PPM°C
- C.R.V. Max. 1%
- Thermal Shock 1%
- Humidity 1%
- Shock 1%
- Vibration 1%
- Load Life 2%
- Low Temp. 1%
- High Temp. 2%
- Rotational Life 2%

Terminal Type

Resistance Code
- First Two Digits Significant
- Last Digit No. Of Zeros
- 103 = 10,000 Ohms

Non-Wirewound RJR Styles - High Reliability

MIL-R-39035 **RJR24 F W 102 P**

Style

Characteristic
- T.C. Max. ±100PPM°C
- C.R.V. Max. 1%
- Thermal Shock 1%
- Humidity 1%
- Shock 1%
- Vibration 1%
- Load Life
  - 2,000 Hrs. 3%
  - 10,000 Hrs. 3%
- Low Temp. 1%
- High Temp. 3%
- Rotational Life 2%
- Conditioning 1-1/2%

Terminal Type

Resistance Code
- First Two Digits Significant
- Last Digit No. Of Zeros
- 102 = 1,000 Ohms

Failure Rate
(% Failures/1,000 Hrs. — 60% Confidence)
- M = 1.0%
- P = 0.1%
- R = .01%

Wirewound RT Styles

MIL-R-27208 **RT24 C2 P 101**

Style

Characteristic
- C = Temp. Coeff. ±50 PPM/°C
- 2 = 85° Rating Temp., 150° Max. Oper. Temp.

Terminal Type

Resistance Code
- First Two Digits Significant
- Last Digit No. Of Zeros
- 101 = 100 Ohms

High-Rel Wirewound Specification MIL-R-39015 RTR Styles

This specification has a procedure for ordering, processing, and marking parts entirely different than the other three specifications. IT DOES NOT USE THE TYPE DESIGNATION NUMBER AS THE PART NUMBER.

THE NUMBER TO ORDER BY CONSISTS OF:

1. The individual specification sheet number
   M39015/2 (FOR STYLE RTR22)
   M39015/3 (FOR STYLE RTR24)

2. A dash number from the specification sheet table for the resistance value

M39015/2	M39015/3
–003 500	– 006 500
–004 1K	– 007 1K
–005 2K	– 008 2K
–006 5K	– 009 5K
–007 10K	– 010 10K
–008 20K	

3. Terminal Type

4. Failure rate level M
   M = 1%
   % FAILURE/1,000 Hrs. — 60% Confidence

EXAMPLES OF PART NUMBERS

M39015/2 — **006LM**
5K Term. Type L — Failure Rate M

M39015/3 — **010XM**
10K Term. Type X — Failure Rate M

The table on the next page shows all part numbers covered by this specification, the conversion to the RTR type designation number required by the supplier to manufacture the part, and the number that will be marked on the units you receive (same as part number ordered but with the letter "J" in front of it). The letter "J" is a government mark and it is certification that the parts comply with the specification.

INFORMATION NOTES

1. M39015/3 WAS ADDED TO THE MIL-SPEC AFTER ITS ORIGINAL RELEASE.

Specifications are subject to change without notice.

Mil-Spec Numbering System - How To Order

BOURNS®

Bourns High Reliability Mil-Spec Part Numbers

Order By	Process By*	Marked With	Terminal Types	Failure Rates
M39015/2-003(TS)(FR) M39015/2-004(TS)(FR) M39015/2-005(TS)(FR)	RTR22D(TS)501(FR) RTR22D(TS)102(FR) RTR22D(TS)202(FR)	JM39015/2-003(TS)(FR) JM39015/2-004(TS)(FR) JM39015/2-005(TS)(FR)	L, P, W, X	M
M39015/2-006(TS)(FR) M39015/2-007(TS)(FR) M39015/2-008(TS)(FR)	RTR22D(TS)502(FR) RTR22D(TS)103(FR) RTR22D(TS)203(FR)	JM39015/2-006(TS)(FR) JM39015/2-007(TS)(FR) JM39015/2-008(TS)(FR)		
M39015/3-006(TS)(FR)	RTR24D(TS)501(FR)	JM39015/3-006(TS)(FR)	P, W, X	M
M39015/3-007(TS)(FR) M39015/3-008(TS)(FR)	RTR24D(TS)102(FR) RTR24D(TS)202(FR)	JM39015/3-007(TS)(FR) JM39015/3-008(TS)(FR)	P, W, X	M
M39015/3-009(TS)(FR) M39015/3-010(TS)(FR)	RTR24D(TS)502(FR) RTR24D(TS)103(FR)	JM39015/3-009(TS)(FR) JM39015/3-010(TS)(FR)		

*May also order using this part number.

Qualified Part Numbers

Bourns reserves the right per MIL-R-39035 to substitute a higher grade temperature characteristic or failure rate (QPL) than requested.

RT/RTR22 (Commercial Model 3250)

STD. VALUES OHMS	RT22C2_____				RTR22D_____				NOMINAL RESOLUTION (PERCENT)
	L	P	W	X	L	P	W	X	
10	-	-	-	-	-	-	-	-	-
20	-	-	-	-	-	-	-	-	-
50	RT22C2L500	RT22C2P500	RT22C2W500	RT22C2X500	-	-	-	-	0.80
100	RT22C2L101	RT22C2P101	RT22C2W101	RT22C2X101	-	-	-	-	0.90
200	RT22C2L201	RT22C2P201	RT22C2W201	RT22C2X201	-	-	-	-	0.70
500	RT22C2L501	RT22C2P501	RT22C2W501	RT22C2X501	RTR22DL501M	RTR22DP501M	RTR22DW501M	RTR22DX501M	0.60
1K	RT22C2L102	RT22C2P102	RT22C2W102	RT22C2X102	RTR22DL102M	RTR22DP100M	RTR22DW102M	RTR22DX102M	0.40
2K	RT22C2L202	RT22C2P202	RT22C2W202	RT22C2X202	RTR22DL202M	RTR22DP202M	RTR22DW202M	RTR22DX202M	0.30
5K	RT22C2L502	RT22C2P502	RT22C2W502	RT22C2X502	RTR22DL502M	RTR22DP502M	RTR22DW502M	RTR22DX502M	0.25
10K	RT22C2L103	RT22C2P103	RT22C2W103	RT22C2X103	RTR22DL103M	RTR22DP103M	RTR22DW103M	RTR22DX103M	0.19
20K	RT22C2L203	RT22C2P203	RT22C2W203	RT22C2X203	RTR22DL203M	RTR22DP203M	RTR22DW203M	RTR22DX203M	0.16

Qualified Part Numbers

BOURNS®

Bourns reserves the right per MIL-R-39035 to substitute a higher grade temperature characteristic or failure rate (QPL) than requested.

RT/RTR24 (Commercial Model 3290)

STD. VALUES OHMS	RT24C2_____			RTR24D_____			NOMINAL RESOLUTION (PERCENT)
	P	W	X	P	W	X	
10	RT24C2P100	RT24C2W100	RT24C2X100	-	-	-	1.11
20	RT24C2P200	RT24C2W200	RT24C2X200	-	-	-	0.93
50	RT24C2P500	RT24C2W500	RT24C2X500	-	-	-	0.62
100	RT24C2P101	RT24C2W101	RT24C2X101	-	-	-	0.60
200	RT24C2P201	RT24C2W201	RT24C2X201	-	-	-	0.54
500	RT24C2P501	RT24C2W501	RT24C2X501	RTR24DP501M	RTR24DW501M	RTR24DX501M	0.42
1K	RT24C2P102	RT24C2W102	RT24C2X102	RTR24DP102M	RTR24DW102M	RTR24DX102M	0.33
2K	RT24C2P202	RT24C2W202	RT24C2X202	RTR24DP202M	RTR24DW202M	RTR24DX202M	0.26
5K	RT24C2P502	RT24C2W502	RT24C2X502	RTR24DP502M	RTR24DW502M	RTR24DX502M	0.20
10K	RT24C2P103	RT24C2W103	RT24C2X103	RTR24DP103M	RTR24DW103M	RTR24DX103M	0.17

RT26 (Commercial Model 3260)

STD. VALUES OHMS	RT26C2_____		NOMINAL RESOLUTION (PERCENT)
	W	X	
10	RT26C2W100	RT26C2X100	1.90
20	RT26C2W200	RT26C2X200	1.50
50	RT26C2W500	RT26C2X500	1.25
100	RT26C2W101	RT26C2X101	1.00
200	RT26C2W201	RT26C2X201	0.94
500	RT26C2W501	RT26C2X501	0.58
1K	RT26C2W102	RT26C2X102	0.50
2K	RT26C2W202	RT26C2X202	0.45
5K	RT26C2W502	RT26C2X502	0.34

FAILURE RATE LEVEL M = 1.0%

RJ22 (Commercial Model 3252)

STD. VALUES OHMS	RJ22F_____			
	L	P	W	X
10	RJ22FL100	RJ22FP100	RJ22FW100	RJ22FX100
20	RJ22FL200	RJ22FP200	RJ22FW200	RJ22FX200
50	RJ22FL500	RJ22FP500	RJ22FW500	RJ22FX500
100	RJ22FL101	RJ22FP101	RJ22FW101	RJ22FX101
200	RJ22FL201	RJ22FP201	RJ22FW201	RJ22FX201
500	RJ22FL501	RJ22FP501	RJ22FW501	RJ22FX501
1K	RJ22FL102	RJ22FP102	RJ22FW102	RJ22FX102
2K	RJ22FL202	RJ22FP202	RJ22FW202	RJ22FX202
5K	RJ22FL502	RJ22FP502	RJ22FW502	RJ22FX502
10K	RJ22FL103	RJ22FP103	RJ22FW103	RJ22FX103
20K	RJ22FL203	RJ22FP203	RJ22FW203	RJ22FX203
25K	RJ22FL253	RJ22FP253	RJ22FW253	RJ22FX253
50K	RJ22FL503	RJ22FP503	RJ22FW503	RJ22FX503
100K	RJ22FL104	RJ22FP104	RJ22FW104	RJ22FX104
250K	RJ22FL254	RJ22FP254	RJ22FW254	RJ22FX254
500K	RJ22FL504	RJ22FP504	RJ22FW504	RJ22FX504
1 MEG	RJ22FL105	RJ22FP105	RJ22FW105	RJ22FX105

RJ24 (Commercial Model 3296)

STD. VALUES OHMS	RJ24F_____		
	P	W	X
10	RJ24FP100	RJ24FW100	RJ24FX100
20	RJ24FP200	RJ24FW200	RJ24FX200
50	RJ24FP500	RJ24FW500	RJ24FX500
100	RJ24FP101	RJ24FW101	RJ24FX101
200	RJ24FP201	RJ24FW201	RJ24FX201
500	RJ24FP501	RJ24FW501	RJ24FX501
1K	RJ24FP102	RJ24FW102	RJ24FX102
2K	RJ24FP202	RJ24FW202	RJ24FX202
5K	RJ24FP502	RJ24FW502	RJ24FX502
10K	RJ24FP103	RJ24FW103	RJ24FX103
20K	RJ24FP203	RJ24FW203	RJ24FX203
25K	RJ24FP253	RJ24FW253	RJ24FX253
50K	RJ24FP503	RJ24FW503	RJ24FX503
100K	RJ24FP104	RJ24FW104	RJ24FX104
250K	RJ24FP254	RJ24FW254	RJ24FX254
500K	RJ24FP504	RJ24FW504	RJ24FX504
1 MEG	RJ24FP105	RJ24FW105	RJ24FX105

FAILURE RATE LEVEL M = 1.0%

Specifications are subject to change without notice.

Qualified Part Numbers

BOURNS®

Bourns reserves the right per MIL-R-39035 to substitute a higher grade temperature characteristic or failure rate (QPL) than requested.

RJR24 (Commercial Model 3296)

STD. VALUES OHMS	RJR24F_____		
	P	W	X
10	RJR24FP100*	RJR24FW100*	RJR24FX100*
20	RJR24FP200*	RJR24FW200*	RJR24FX200*
50	RJR24FP500*	RJR24FW500*	RJR24FX500*
100	RJR24FP101*	RJR24FW101*	RJR24FX101*
200	RJR24FP201*	RJR24FW201*	RJR24FX201*
500	RJR24FP501*	RJR24FW501*	RJR24FX501*
1K	RJR24FP102*	RJR24FW102*	RJR24FX102*
2K	RJR24FP202*	RJR24FW202*	RJR24FX202*
5K	RJR24FP502*	RJR24FW502*	RJR24FX502*
10K	RJR24FP103*	RJR24FW103*	RJR24FX103*
20K	RJR24FP203*	RJR24FW203*	RJR24FX203*
25K	RJR24FP253*	RJR24FW253*	RJR24FX253*
50K	RJR24FP503*	RJR24FW503*	RJR24FX503*
100K	RJR24FP104*	RJR24FW104*	RJR24FX104*
250K	RJR24FP254*	RJR24FW254*	RJR24FX254*
500K	RJR24FP504*	RJR24FW504*	RJR24FX504*
1 MEG	RJR24FP105*	RJR24FW105*	RJR24FX105*

RJ/RJR26 (Commercial Model 3262)

STD. VALUES OHMS	RJ26F_____			RJR26F_____		
	P	W	X	P	W	X
10	RJ26FP100	RJ26FW100	RJ26FX100	RJR26FP100*	RJR26FW100*	RJR26FX100*
20	RJ26FP200	RJ26FW200	RJ26FX200	RJR26FP200*	RJR26FW200*	RJR26FX200*
50	RJ26FP500	RJ26FW500	RJ26FX500	RJR26FP500*	RJR26FW500*	RJR26FX500*
100	RJ26FP101	RJ26FW101	RJ26FX101	RJR26FP101*	RJR26FW101*	RJR26FX101*
200	RJ26FP201	RJ26FW201	RJ26FX201	RJR26FP201*	RJR26FW201*	RJR26FX201*
500	RJ26FP501	RJ26FW501	RJ26FX501	RJR26FP501*	RJR26FW501*	RJR26FX501*
1K	RJ26FP102	RJ26FW102	RJ26FX102	RJR26FP102*	RJR26FW102*	RJR26FX102*
2K	RJ26FP202	RJ26FW202	RJ26FX202	RJR26FP202*	RJR26FW202*	RJR26FX202*
5K	RJ26FP502	RJ26FW502	RJ26FX502	RJR26FP502*	RJR26FW502*	RJR26FX502*
10K	RJ26FP103	RJ26FW103	RJ26FX103	RJR26FP103*	RJR26FW103*	RJR26FX103*
20K	RJ26FP203	RJ26FW203	RJ26FX203	RJR26FP203*	RJR26FW203*	RJR26FX203*
25K	RJ26FP253	RJ26FW253	RJ26FX253	RJR26FP253*	RJR26FW253*	RJR26FX253*
50K	RJ26FP503	RJ26FW503	RJ26FX503	RJR26FP503*	RJR26FW503*	RJR26FX503*
100K	RJ26FP104	RJ26FW104	RJ26FX104	RJR26FP104*	RJR26FW104*	RJR26FX104*
250K	RJ26FP254	RJ26FW254	RJ26FX254	RJR26FP254*	RJR26FW254*	RJR26FX254*
500K	RJ26FP504	RJ26FW504	RJ26FX504	RJR26FP504*	RJR26FW504*	RJR26FX504*
1 MEG	RJ26FP105	RJ26FW105	RJ26FX105	RJR26FP105*	RJR26FW105*	RJR26FX105*

*LAST LETTER IN NUMBER IS FAILURE RATE LEVEL. M = 1.0% P = 0.1% R = 0.01%

HOW TO USE THIS SECTION

This Applications/Processing Guide is intended to provide you with points to consider for designing circuits, selecting trimmers and arranging board layouts, to achieve maximum performance and long life for your circuits and systems. We have also included information on steps your manufacturing engineers can take to preserve circuit reliability.

For example, are you aware that the trimmers and other mechanical components on your boards may face a more extreme environment during boardwashing on your own production line, than they ever will in use? For those trimmers that may need to be reset, are you remembering to select and mount the trimmers to provide easy accessibility?

In this section, you'll find dozens of pointers, reminders and useful facts that will help you be more knowledgeable and successful in using trimmers.

TRIMMER BASICS

In its most common form, a trimmer is simply a device containing a resistive element, and a wiper, or adjustable tap, contacting the element. The wiper can be mechanically moved to vary the amount of voltage or resistance in the circuit. The resistive element is usually laid out in linear or a circular configuration:

The Resistive Element

Trimmers for commercial applications typically have a resistive element made of carbon or cermet (a combination of CERamic and METal), or of resistance wire wound on an insulated copper mandrel.

The main advantages of wirewound trimmers are their low temperature coefficient, higher power dissipation, lower noise, tighter resistance tolerance, and, when used as a variable resistor, the excellent current-carrying capacity through the wiper due to the lower contact resistance. Also, their long-term resistance stability with time and temperature is slightly better than cermet.

Cermet trimmers provide a wider resistance range (10 ohms to 5 megohms, versus a maximum of 50K ohms for wirewound). Also, the wiper output can be set closer to the desired value since the resistive element presents a continuous contact surface for the wiper, as opposed to the discrete turns (resolution) of the wirewound. Other advantages with cermet are the lower reactance in high-frequency applications, the smaller sizes available, and the generally lower price than wirewound types.

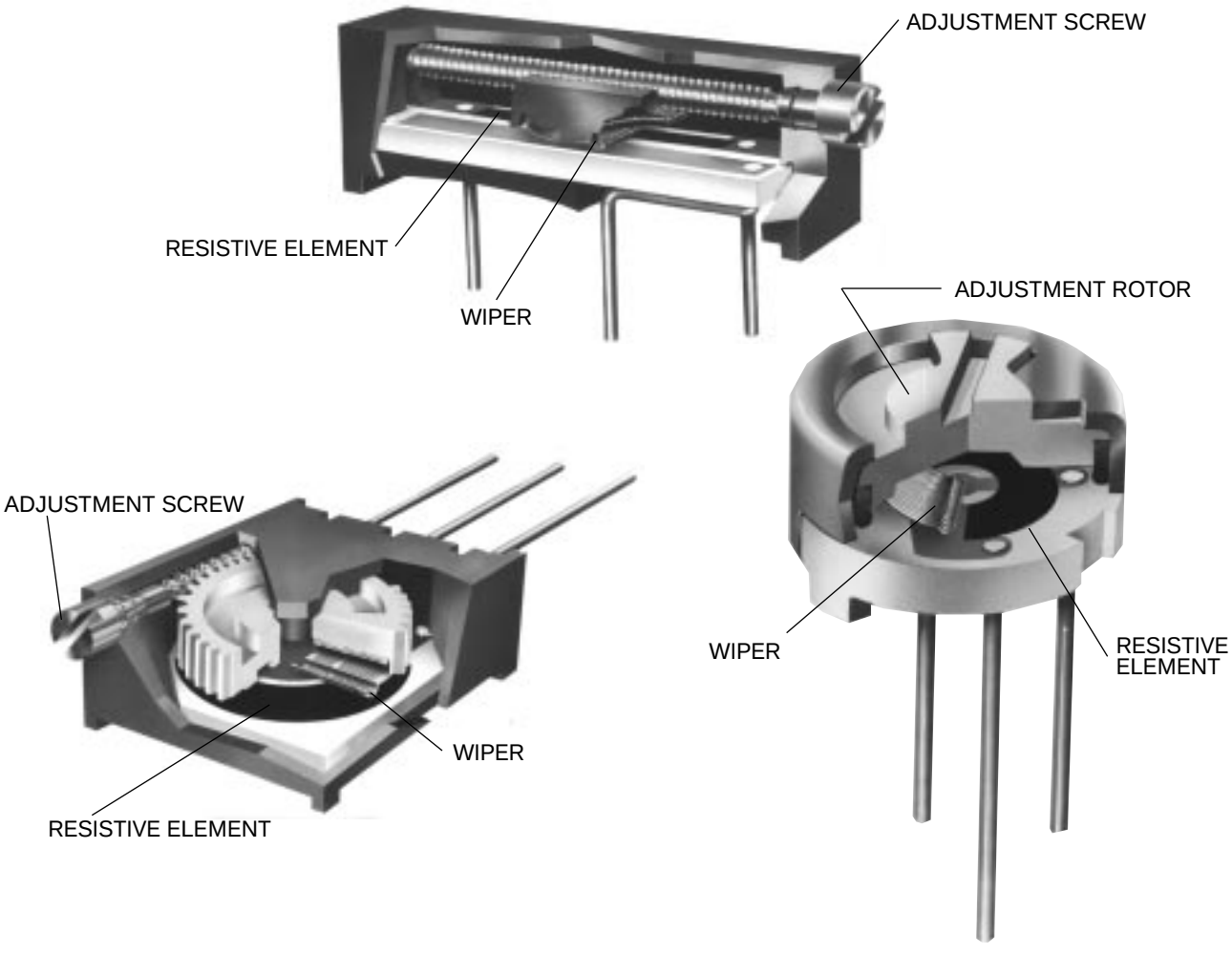

Specifications are subject to change without notice.

Soldering And Cleaning Processes

BOURNS®

This application note is designed to provide step-by-step processing recommendations. It covers the popular SMC soldering processes currently in use and provides recommendations and cautions for each step. Since many variations of temperature, time, processes, cleaning agents and board types are found in the electronics industry, you'll want to test and verify your own system.

The process steps, recommendations and cautions are based on Bourns Trimpot surveys of SMC users, equipment manufacturers and materials suppliers. Also, comments reflect results of Bourns' testing. Our findings suggest the following soldering and cleaning processes:

1. SOLDERING - Forced Hot Air, Convection, IR, Vapor Phase (In-Line), Wave (Single and Dual)
2. CLEANING - Solvent, Aqueous, Semi-Aqueous, No-Clean

On the facing page are the common methods, materials and maximum temperature/time parameters for soldering and cleaning processes.

1

Solder Paste Printing

Reflow

GENERAL
Use the optimum solder paste for the pattern, printing process, solder paste density and solder joint quality.

RECOMMENDED
Use Sn 63% Pb 37% solder paste. Use 8 to 10 mil thickness for solder paste print.

CAUTION
Since solder paste usually contains a high percentage of activators, you must ensure adequate cleaning to remove all residues, unless no-clean (low solids) paste is used.

2



Adhesive Application

Flow (Wave)

GENERAL
The adhesive must hold the SM Component (SMC) in correct orientation upon placement and maintain correct trimmer position during physical handling before final solder processing.

RECOMMENDED
To assure positional stability, place a single dot of epoxy under the SMC.

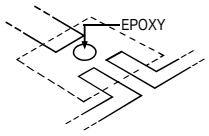

CAUTION
Stability after placement is a direct function of the volume of adhesive used. Use enough epoxy to assure stability through the cure process.

Avoid overflow of epoxy to solder pad and terminal areas.

3

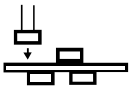

SMC Placement

GENERAL
Use pick-and-place equipment with vacuum nozzle ID size that allows adequate suction to pick the SMC out of the embossed cavity.

RECOMMENDED
The nozzle inside diameter (ID) should not exceed .100 in. (2.54mm) to ensure adequate suction and part alignment.

CAUTION
Assure parts are placed so that all terminals are equidistant (<4 mils) from the solder pads.

Align terminals with solder belt direction of travel to avoid body shadowing effects during flow soldering.

4

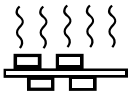

Adhesive Cure

Flow (Wave)

GENERAL
Use heat/time cure method with either convection oven or infrared radiation.

RECOMMENDED
Cure using the temperature and times recommended by the adhesive manufacturer.

CAUTION
Use enough cure time to assure complete adhesive transition from fluid to solid.

5

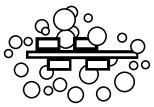

Flux Application

Flow (Wave)

GENERAL
Use the correct flux to remove surface oxides, prevent reoxidation and promote wetting.

RECOMMENDED
- RMA
- No-clean SRB (Synthetic resin based)
- OA (Organic Acid) (See caution)

CAUTION
Avoid highly activated fluxes. Consult factory before using OA.

SOLDERING/CLEANING METHODS

	REFLOW								FLOW				
Process Step	**Hot Air; Infrared** (Solvent)	**Hot Air; Infrared** (Semi-Aq)	**Hot Air; Infrared** (Aqueous)	**Hot Air; Infrared** (No-Clean)	**Vapor Phase** (Solvent)	**Vapor Phase** (Semi-Aq)	**Vapor Phase** (Aqueous)	**Vapor Phase** (No-Clean)	**Wave** (Solvent)	**Wave** (Semi-Aq)	**Wave** (Aqueous)	**Wave** (No-Clean)	**Material**
1. Solder Paste Printing	X	X	X	X	X	X	X	X					
2. Adhesive Application									X	X	X	X	
3. Component Placement	X	X	X	X	X	X	X	X	X	X	X	X	
4. Adhesive Cure									X	X	X	X	
5. Flux Application									X				Rosin
5. Flux Application										X			Rosin
5. Flux Application											X		Organic Acid
5. Flux Application												X	Synthetic Resin Based
6. Solder (Reflow)	X	X		X	X	X	X	X					63/37 Sn/Pb
7. Solder (Flow)									X	X	X	X	63/37 Sn/Pb
8. Wash (Solvent)	X				X				X				ODS Free
8. Wash (Semi-Aqueous)		X				X				X			Terpene, Hydrocarbon Based
8. Wash (Aqueous)			X				X				X		DI H20; Surfacant; Saponifier
High Pressure Fluids			X				X				X		(See Caution)
Max. Temp. (°C)/Time (Secs)	235/40	235/40	235/40	235/40	215/180	215/180	215/180	215/180	260/5	260/5	260/5		
Min. Temp. (°C)	215	215	215	215	215	215	215	215	215	215	215		

Specifications are subject to change without notice.

TRIMMING POTENTIOMETERS AND DEFINITIONS

The following terms and definitions have been edited from the Industrial Standard published by the Variable Resistive Components Institute. It is intended to encourage standardization in communication and understanding between the manufacturer and user. The complete standard, including detailed test procedures, is available upon request.

GENERAL TERMS

TRIMMING POTENTIOMETER: An electrical mechanical device with three terminals. Two terminals are connected to the ends of a resistive element and one terminal is connected to a movable conductive contact which slides over the element, thus allowing the input voltage to be divided as a function of the mechanical input. It can function as either a voltage divider or rheostat.

WIREWOUND TRIMMING POTENTIOMETER: A trimming potentiometer characterized by a resistance element made up of turns of wire on which the wiper contacts only a small portion of each turn.

NON-WIREWOUND TRIMMING POTENTIOMETER: A trimming potentiometer characterized by the continuous nature of the surface area of the resistance element to be contacted. Contact is maintained over a continuous, unbroken path. The resistance is achieved by using material compositions other than wire such as carbon, conductive plastics, metal film and cermet.

RESISTANCE ELEMENT: A continuous, unbroken length of resistive material without joints, bonds or welds except at the junction of the element and the electrical terminals connected to each end of the element, or at an intermediate point such as a center tap.

ADJUSTMENT SHAFT: The mechanical input member of a trimming potentiometer which when actuated causes the wiper to traverse the resistance element resulting in a change in output voltage or resistance.

SINGLE-TURN ADJUSTMENT: Requires 360º or less mechanical input to cause the wiper to traverse the total resistance element.

MULTITURN ADJUSTMENT: Requires more than 360º mechanical adjustment to cause the wiper to traverse the total resistance element.

TERMINAL: An external member that provides electrical access to the resistance element and wiper.

LEADWIRE TYPE TERMINAL: Flexible insulated conductor.

PRINTED CIRCUIT TERMINAL: Rigid uninsulated electrical conductor, suitable for printed circuit board plug-in.

SOLDER LUG TERMINAL: Rigid uninsulated electrical conductor, suitable for external lead attachment.

WIPER: The wiper is the member in contact with the resistive element that allows the output to be varied when the adjustment shaft is rotated.

STOP-CLUTCH: A device which allows the wiper to idle at the ends of the resistive element without damage as the adjustment shaft continues to be actuated in the same direction.

STOP – SOLID: A positive limit to mechanical and/or electrical adjustment.

STACKING: The mounting of one trimming potentiometer adjacent to or on top of another utilizing the same mounting hardware.

THEORETICAL RESOLUTION: (Wirewound only) The theoretical measurement of sensitivity to which the output ratio may be adjusted; the reciprocal of the number of turns of wire in resistance winding expressed as a percentage.

N = Total number of resistance wire turns.

$\frac{1}{N} \times 100$ = Theoretical resolution percent.

INPUT AND OUTPUT TERMS

TOTAL APPLIED VOLTAGE: The total voltage applied between the designated input terminals.

OUTPUT VOLTAGE: The voltage between the wiper terminal and the designated reference point. Unless otherwise specified, the designated reference point is the CCW terminal.

OUTPUT RATIO: The ratio of the output voltage to the designated input reference voltage. Unless otherwise specified, the reference voltage is the total applied voltage.

LOAD RESISTANCE: An external resistance as seen by the Output Voltage (connected between the wiper terminal and the designated reference point.)

ADJUSTMENT TERMS

DIRECTION OF TRAVEL: Clockwise (CW) or counterclockwise (CCW) rotation when viewing the adjustment end of the potentiometer.

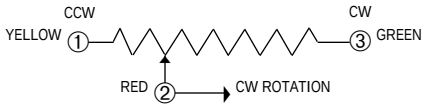

MECHANICAL TRAVEL — SOLID STOPS: The total travel of the adjustment shaft between integral stops. Continuity must be maintained throughout the travel.

MECHANICAL TRAVEL — CLUTCHING ACTION: The total travel of the adjustment shaft between the points where clutch actuation begins. Continuity must be maintained throughout the travel and during clutch actuation.

MECHANICAL TRAVEL — CONTINUOUS ROTATION: The total travel of the adjustment shaft when the wiper movement is unrestricted at either end of the resistive element as the adjustment shaft continues to be actuated.

ADJUSTMENT TRAVEL (ELECTRICAL): The total travel of the adjustment shaft between minimum and maximum output voltages.

CONTINUITY TRAVEL: The total travel of the shaft over which electrical continuity is maintained between the wiper and the resistance element.

ELECTRICAL AND OPERATIONAL CHARACTERISTICS

TOTAL RESISTANCE: The DC resistance between the input terminals with the wiper positioned to either end stop, or in dead band for continuous rotation potentiometers.

TEST VOLTAGE

Total Resistance, Nominal	Maximum Test Voltage	
	Non-Wirewound	Wirewound
Ohms	Volts DC	Volts DC
.1 TO 1.0	0.1	0.1
1.0 to 50	0.3	0.3
50 to 100	2.0	2.0
100 to 1000	3.0	3.0
1K to 100K	10	10
Over 0.1 megohm	50	—

NOTE: The test voltages should never exceed the equivalent of 10% rated power. The minimum voltage to be used is 10 MV.

ABSOLUTE MINIMUM RESISTANCE: The resistance measured between the wiper terminal and each end terminal with the wiper positioned to give a minimum value.

END RESISTANCE: The resistance measured between the wiper terminal and an end terminal when the wiper is positioned at the corresponding end of mechanical travel. Absolute minimum resistance and end resistance are synonymous for continuous rotation trimmers.

TEMPERATURE COEFFICIENT OF RESISTANCE: The unit change in resistance per degree Celsius change from a reference temperature, expressed in parts per million per degree Celsius as follows:

$$TC = \frac{R^2 - R^1}{R^1 (T^2 - T^1)} \times 10^6$$

Where:

R1 = Resistance at reference temperature in ohms.
R2 = Resistance at test temperature in ohms.
T1 = Reference temperature in degrees Celsius.
T2 = Test temperature in degrees Celsius.

RESISTANCE-TEMPERATURE CHARACTERISTIC: The difference between the total resistance values measured at a reference temperature of 25ºC and the specified test temperature expressed as a percent of the Total Resistance.

$$RTC = \frac{R^2 - R^1}{R^1} \times 100$$

Where:

R1 = Resistance at reference temperature (25ºC) in ohms.
R2 = Resistance at the test temperature in ohms.

CONTACT RESISTANCE VARIATION: The apparent resistance seen between the wiper and the resistance element when the wiper is energized with a specified current and moved over the adjustment travel in either direction at a constant speed. The output variations are measured over a specified frequency bandwidth, exclusive of the effects due to roll-on or roll-off of the terminations and is expressed in ohms or % of total resistance.

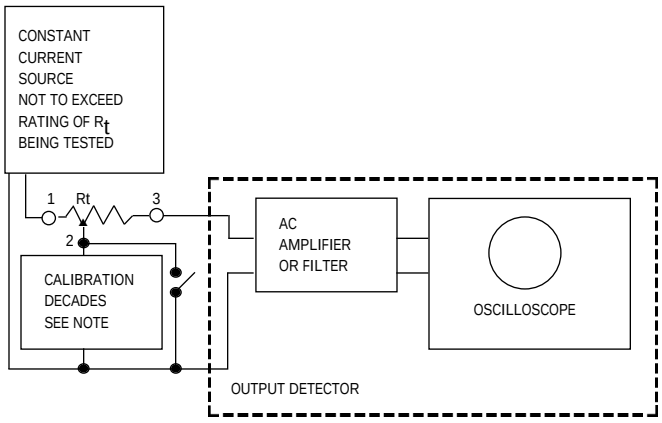

Figure 1. Contact-resistance-variation measuring circuit

Rt = Test specimen
Output detector bandwidth: 100 cycles to 50 kilocycles
Minimum input impedance to output detector:
At least 10 times the nominal resistance being tested

NOTE: At the calibration of the decade, terminals 1 and 2 must be coincident. Calibration decade is to be set for the contact-resistance variation (CRV) level of the specified nominal resistance being tested.

TABLE II

Test Current (±20%)	Total Resistance Range
30 ma	2 = Rt = 200
5 ma	200 ‹ Rt = 3K
1 ma	3K ‹ Rt = 200K
200 ua	200K ‹ Rt = 1 megohm
50 ua	1 megohm ‹ Rt = 5 megohm

EQUIVALENT NOISE RESISTANCE: Wirewound only. Any spurious variation in the electrical output not present in the input, defined quantitatively in terms of an equivalent parasitic, transient resistance in ohms, appearing between the contact and the resistant element when the shaft is rotated. The equivalent Noise Resistance is defined independently of the resolution, functional characteristics and the total travel. The magnitude of the Equivalent Noise Resistance is the maximum departure from a specific reference line. The wiper of the potentiometer is required to be excited by a specific current and moved at a specific speed.

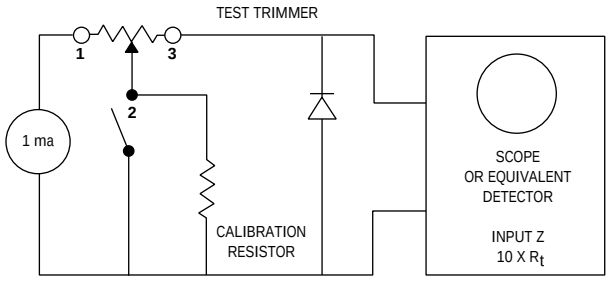

$$ENR\ (ohms) = \frac{\text{Max. deviation (volts)}}{.001\ \text{amps}}$$

CONTINUITY: Continuity is the maintenance of continuous electrical contact between the wiper and both end terminals of the resistive element.

SETTING STABILITY: The amount of change in the output voltage, without readjustment, expressed as a percentage of the total applied voltage.

DIELECTRIC STRENGTH: The ability to withstand the application of a specified potential of a given characteristic, between the terminals and all other external conducting members such as shaft, housing and mounting hardware without exceeding a specified leakage current value.

INSULATION RESISTANCE: The resistance to a specified DC voltage impressed between the terminals and all other external conducting members such as shaft, housing and mounting hardware.

POWER RATING: The maximum power that a trimming potentiometer can dissipate across the total resistive element under specified conditions while meeting specified performance requirements.

ROTATIONAL LIFE: The number of cycles obtainable under specified operating conditions while remaining within specified allowable degradation. A cycle is defined as one complete traversal of the wiper over the resistive element in both directions.

LOAD LIFE: The number of hours at which a device may dissipate rated power under specified operating conditions while remaining within specified allowable degradations.

ADJUSTABILITY (OUTPUT RESISTANCE): The precision with which the output resistance of a device can be set to the desired value.

Specifications are subject to change without notice.

ADJUSTABILITY (OUTPUT VOLTAGE RATIO): The precision with which the output voltage ratio of a device can be set to the desired value.

MECHANICAL TERMS

STARTING TORQUE: The maximum moment in the clockwise and counterclockwise directions required to initiate shaft adjustment anywhere in the mechanical travel.

STOP TORQUE: The maximum static moment that can be applied to adjustment shaft at each mechanical stop for a specified period of time without loss of continuity or mechanical damage affecting operational characteristics.

SOLDERABILITY: The ability of the terminals to accept a uniform coating of solder under specified conditions.

WELDABILITY: The ability of materials to be welded together under specified conditions.

TERMINAL STRENGTH: The ability of the terminals to withstand specified mechanical stresses without sustaining damage that would affect utility of the terminals or operation of the trimming potentiometer.

IMMERSION SEALED: The ability of the unit to withstand submersion in acceptable cleaning solutions used in normal soldering processes without performance degradation under specified environmental conditions.

TRIMMER "ABILITIES"

When you are selecting components for a new design, you typically take into account the environmental conditions that the components will need to endure during the lifetime of the instrument or device. Designers in the past have often overlooked the environmental extremes of their own production lines, where the conditions may be much more severe than anything encountered in actual end use.

PROCESSABILITY

"Processability" refers to the ability of the unit to withstand the production-line processes associated with the finishing steps on the PC boards. Typically, both SMT and through-hole products are subjected to similar PC board processing operations after preparation for assembly. These operations can generally be summarized as follows:

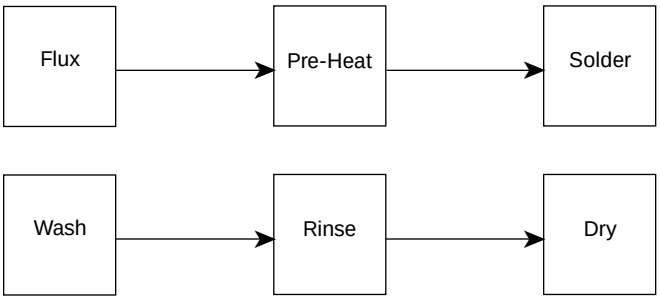

Soldering (SMT)

Four types of equipment are usually associated with SMT soldering:

IR System — Uses a multi-zone infrared furnace with IR elements heated to a temperature substantially above chamber or product temperature. Energy is supplied to the product primarily by IR radiation to reflow solder.

Forced Hot Air Convection System — Uses a multizone forced air convection system with heat source panels using IR or other type heating elements. Approximately 85% of the heating is provided by free convection to reflow solder on exposed PC boards.

Dual Wave System — Utilizes two parallel solder waves. The first is a turbulent wave followed by a laminar wave. The turbulent wave is for small, constricted areas, while the laminar wave removes solder projections.

Vapor Phase System — Provides a single-zone condensation heat source achieved with liquid fluorinated hydrocarbons that have been brought to the boiling point to create a saturated vapor zone. Heat is then released by the fluid's heat of vaporization as the vapor condenses on the product.

Soldering (Through-hole)

Two types of equipment are usually associated with through-hole soldering:

Single Wave System — Provides an inclined portion of the solder wave for the PC board to pass over. The PC board is positioned to bring many potential solder joints in contact with the wave simultaneously for a short time for soldering.

Drag System — Provides for PC boards to be dragged across the surface of the solder pot. Soldered connections are made during this operation.

PC Board Washing

Two types of equipment are usually associated with both SMT and through-hole products.

Pressure System — Accomplishes cleaning by directing sprays of water under high pressure from multiple nozzles.

Flooding System — Utilizes a combination of flooding (at normal water pressure) and surfactant action for cleaning).

Soldering and Wash Processes

Figure 1 shows typical profiles any component may see during a soldering and board washing operation. For details of material and process variables recommendations, see "Soldering and Cleaning Processes", page 76.

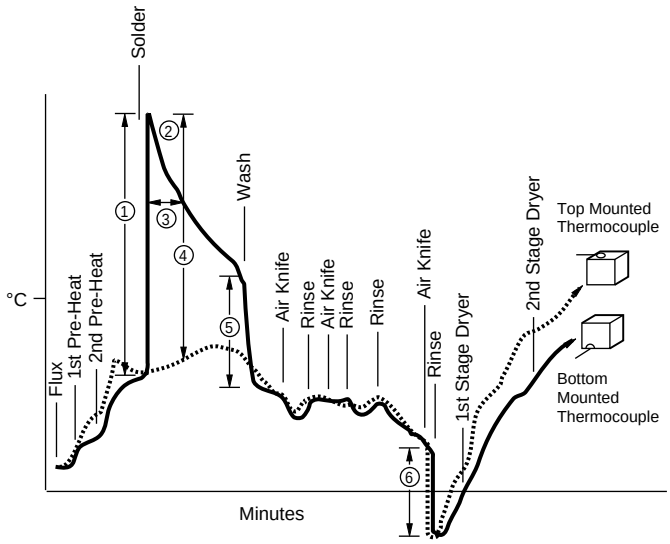

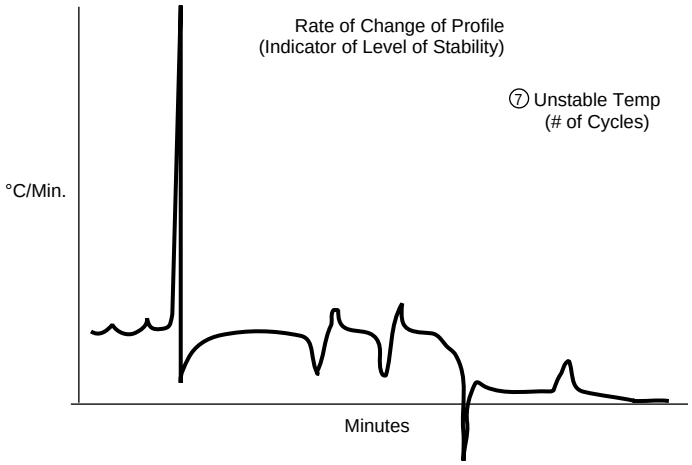

Figure 1.
Typical temperature profile for board washing and soldering.

Critical profile parameters
① Temperature Shock (°C)
② Maximum Temperature (°C)
③ Temperature Exposure (Minimum)
④ Temperature Gradient (°C)
⑤ Temperature Shock Decrease in Water (°C)
⑥ Temperature Shock Decrease in Water & Air Pressure (°C)
⑦ Unstable Temperature (see next page)

General Guidelines for Guarding Against Component Damage

To minimize temperature shock
- Pre-heat boards to maximum acceptable level
- Reduce time in solder

To avoid heating components above their maximum rated temperature
- Use lowest acceptable solder temperature
- Use maximum allowable conveyor speed
- Limit pre-heat temperature to maximum necessary

To limit time of exposure above rated temperature
- Limit time in solder
- After solder operation, cool board to wash temperature before it enters wash

To minimize temperature difference between top and bottom of board
- Apply pre-heat to both top and bottom

To reduce temperature shock on entering the moist environment of the wash
- Use wash/rinse temperature as near component temperature as possible
- Extend time between solder process and wash
- Cool board after solder operation, prior to entering wash

To minimize temperature variations as component travels through moisture
- Minimize number of wash/rinse and rinse/dry cycles
- Use heated air for air knives (to counter evaporative cooling effect)
- Minimize difference between wash and rinse temperature

To minimize exposure to high-pressure water during board wash
- Select trimmer models with pin styles that orient the rotor seal area away from exposure to the high-pressure water stream

SETTABILITY

Settability refers to the ease with which a trimmer can be set accurately to the position that produces the desired circuit condition.

Where the requirement is for obtaining a highly accurate setting the preference is for cermet — because a small incremental adjustment in a wirewound unit does not always produce the expected change in output as the wiper moves off one turn of wire and onto another.

Setting accuracy is better with a multiturn unit than with a single-turn. This is especially true when the speed of setting is also a requirement as on a production line (Figure 2).

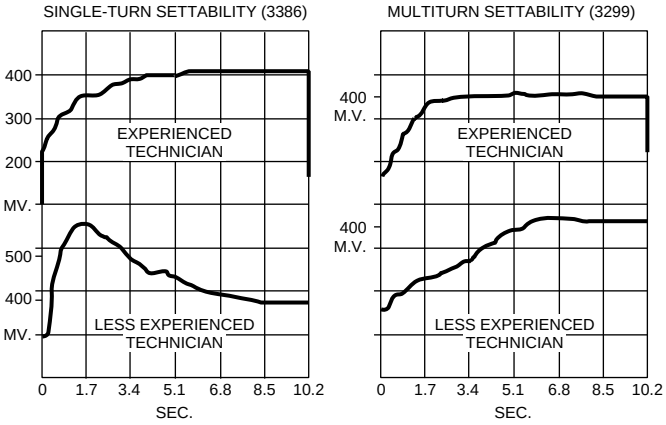

Figure 2.
When accurate setting is required, a multiturn trimmer can generally be set faster than a single-turn.

STABILITY

Stability refers to the ability of the trimmer to remain at the desired setting. Environmental factors play an important role here: stability may be affected by temperature exposure, thermal shock/cycling, humidity, and mechanical shock or vibration.

This is not a matter of concern in most applications, since Bourns trimmers exhibit excellent stability under all specified conditions. Stability is most often a concern when cermet trimmers are used in low current "dry" circuits (50uA amps and below). Under these conditions the contact resistance may vary, making the wiper appear unstable. This is most noticeable in some rheostat applications. This can be avoided by using a wirewound unit, or choosing a cermet trimmer that has been designed for dry-circuit applications. Bourns applications engineers can assist you on this and other questions.

ACCESSIBILITY

When selecting a trimmer and determining its placement on the board, keep in mind the people who will have to use it. Bourns trimmers are available in a wide variety of sizes, shapes, configurations, and placement of adjustment screws. You will usually find a unit on which the access for adjustment will be convenient for the user.

Specifications are subject to change without notice.

Keep in mind the different requirements for accessibility depending on whether adjustment will be done on the assembly line or in the field; with the board uncovered, in a housing or cabinet, or on an extender. Also consider whether production-line adjustment will be done manually or by robotics. A Bourns applications engineer can advise on special high-speed automatic adjustment features.

USABILITY

In selecting a trimmer for a specific application, it's important to be aware that the catalog contains a myriad of facts about each model that can assist you in finding the most suitable choice. For example:

Contact Resistance Variation (CRV) — Under MIL-R 22097 and MIL-R-39035, the maximum CRV is 3%. All Bourns trimmers meet this standard (3% or 3 ohms, whichever is greater). For applications that demand a more rigorous standard, some Bourns trimmers are rated at 2% or 2 ohms, and many others at 1% or 1 ohm.

Power Rating — The ambient temperature at which the trimmer will operate has an important bearing on power rating. Power ratings are usually specified at 70º or 85ºC; at a temperature of 150ºC, the power rating of many trimmers is reduced to zero.

Temperature Coefficient of Resistance (T.C.) — This specification is a measure of how much the resistance changes with a change in temperature. In many applications a T.C. of ±250PPM/ºC is acceptable. Typical T.C. specifications for cermet models are ±100PPM/ºC and ±50PPM/ºC for wirewound models.

RELIABILITY

One of the greatest challenges facing American manufacturers in the early '90s lies in the area of reliability — a challenge for component manufacturers and equipment manufacturers alike. Bourns has been on the leading edge of this effort, both in the area of instituting new methods and technologies for achieving higher reliability, and bringing an awareness of the need to other manufacturers.

SURFACE MOUNTED DEVICES (SMD)

AN EMERGING TECHNOLOGY

Surface mounting of electronic components represents another significant advance in PC board processing. Many U.S. companies have expressed an interest in SMD assembly methods to replace the often troublesome and costly techniques now used with leaded components. Unfortunately, for a number of reasons, this interest has not resulted to date in a major commitment to SMD handling equipment.

There are direct and indirect benefits associated with surface mounting. Since the direct benefits are outgrowths of the indirect ones, some explanation of these interrelated factors is required in order to understand this complex, highly technical and investment intensive subject. Further, a listing of the primary advantages will make additional comments on Japan's SMD usage and growth unnecessary.

In capsule format, the primary advantages (with comments on secondary benefits) are:

- **Lower End-Equipment Cost**
  (positions OEM's for aggressive pricing to achieve market penetration).
- **Superior Product Performance**
  (satisfies user requirements for improved operational performance).
- **Improved Product Quality and Reliability**
  (creates confidence factor which easily translates to increased demand or sales).
- **Smaller Finished Product Size**
  (addresses demand for miniaturization).

Cost, performance, quality/reliability and size — how are these factors interrelated and how are they achieved through surface mounting?

A by-product of SMD technology is the downsizing of components. Size reductions range from 25% to 60%, depending upon the device in question. High PC board densities can be achieved (more components per square inch of real estate; surface mounted units can also be assembled on both sides). PC board material savings alone are substantial. When circuits diminish, external hardware and other materials follow — further savings. Even freight charges are decreased by lighter equipment weight and less packaging.

Surface mounted component prices are forecasted to decline, the result of automated volume production. Volume is directly related to component standardization. By having a few sizes to cover a large range of electrical values and/or parameters, large quantities of a given device can be produced at a much lower per unit cost. Selling prices fall as volume increases. Component quality is also enhanced by eliminating many of the variables associated with short production runs.

Automatic SMD handling equipment, although capital intensive, is the single-most effective way to reduce labor costs and increase yields. Typical "pick and place" machines can assemble components 8 to 10 times faster than human assemblers, with virtually no mistakes. Major direct labor reductions are obvious. The combination of improved component quality and "mistake-free" component placement further decreases costs by eliminating the normal rework of auto-inserted boards.

The many advantages of SMD technology will force change upon both electronic equipment manufacturers and component suppliers alike. Worldwide competitive prices and performance pressures will make it happen. Few electronic components will escape its influence, trimming potentiometers being no exception. Bourns is committed to SMD conversion, and we intend to be a leader in surface mounted trimmer devices. Bourns surface mount trimmers begin on page 12.

GENERAL NOTES:

Plated-Through Holes: (Ref. MIL-STD-275D).

5.5 Plated-through holes. The difference between the inside diameter of the plated-through hole and the nominal outside diameter of the inserted lead shall be not greater than 0.028 inch (0.71mm) or less than 0.010 inch (0.25 mm). Unless otherwise specified, the hole size shall be the finished plated size after solder coating or fusing. When flat ribbon leads are mounted through plated-through holes, the difference between the nominal thickness of the lead and the inside diameter of the plated-through hole shall not exceed 0.028 inch (0.71 mm).