Lever-type disconnect terminal block - UT 4-PE/L/HEDI - 3214324

Please be informed that the data shown in this PDF Document is generated from our Online Catalog. Please find the complete data in the user's documentation. Our General Terms of Use for Downloads are valid (http://phoenixcontact.com/download)



Lever-type disconnect terminal block, connection method: Screw connection, cross section: 0.14 mm² - 6 mm², AWG: 26 - 10, nominal current: 28 A, nom. voltage: 500 V, width: 6.2 mm, mounting type: NS 35/7,5, NS 35/15, color: black

Key Commercial Data

Packing unit	50 pc
GTIN	4 046356 895132
GTIN	4046356895132

Technical data

General

Number of levels	3
Number of connections	5
Potentials	3
Nominal cross section	4 mm²
Color	black
Insulating material	PA
Flammability rating according to UL 94	V0
Rated surge voltage	6 kV
Degree of pollution	3
Overvoltage category	III
Insulating material group	I
Maximum power dissipation for nominal condition	1.02 W (the value is multiplied when connecting multiple levels)
Designation	Level 1
Maximum load current	36 A (with 6 mm² conductor cross section)
Nominal current I_N	28 A (with 4 mm² conductor cross section)
Nominal voltage U_N	500 V
Designation	Level 2

Lever-type disconnect terminal block - UT 4-PE/L/HEDI - 3214324

Technical data

General

Maximum load current	20 A (with 6 mm² conductor connection)
Nominal current I_N	20 A (with 4 mm² conductor cross section)
Nominal voltage U_N	500 V
Open side panel	No
Shock protection test specification	DIN EN 50274 (VDE 0660-514):2002-11
Back of the hand protection	guaranteed
Finger protection	guaranteed
Oscillation, broadband noise test result	Test passed
Test specification, oscillation, broadband noise	DIN EN 50155 (VDE 0115-200):2008-03
Test spectrum	Service life test category 1, class B, body mounted
Test frequency	f_1 = 5 Hz to f_2 = 150 Hz
ASD level	0.964 $(m/s^2)^2$/Hz
Acceleration	0.58 g
Test duration per axis	5 h
Test directions	X-, Y- and Z-axis
Shock test result	Test passed
Test specification, shock test	DIN EN 50155 (VDE 0115-200):2008-03
Shock form	Half-sine
Acceleration	5g
Shock duration	30 ms
Number of shocks per direction	3
Test directions	X-, Y- and Z-axis (pos. and neg.)
Relative insulation material temperature index (Elec., UL 746 B)	130 °C
Temperature index of insulation material (DIN EN 60216-1 (VDE 0304-21))	130 °C
Static insulating material application in cold	-60 °C
Behavior in fire for rail vehicles (DIN 5510-2)	Test passed
Flame test method (DIN EN 60695-11-10)	V0
Oxygen index (DIN EN ISO 4589-2)	>32 %
NF F16-101, NF F10-102 Class I	2
NF F16-101, NF F10-102 Class F	2
Surface flammability NFPA 130 (ASTM E 162)	passed
Specific optical density of smoke NFPA 130 (ASTM E 662)	passed
Smoke gas toxicity NFPA 130 (SMP 800C)	passed
Calorimetric heat release NFPA 130 (ASTM E 1354)	28 MJ/kg
Fire protection for rail vehicles (DIN EN 45545-2) R22	HL 1 - HL 3
Fire protection for rail vehicles (DIN EN 45545-2) R23	HL 1 - HL 3
Fire protection for rail vehicles (DIN EN 45545-2) R24	HL 1 - HL 3
Fire protection for rail vehicles (DIN EN 45545-2) R26	HL 1 - HL 3

Dimensions

Lever-type disconnect terminal block - UT 4-PE/L/HEDI - 3214324

Technical data

Dimensions

Width	6.2 mm
Length	92.7 mm
Height	94.5 mm
Height NS 35/7,5	88.9 mm
Height NS 35/15	96.4 mm

Connection data

Note	Please observe the current carrying capacity of the DIN rails.
Connection method	Screw connection
Screw thread	M3
Stripping length	9 mm
Tightening torque, min	0.6 Nm
Tightening torque max	0.8 Nm
Connection in acc. with standard	IEC 60947-7-3
Conductor cross section solid min.	0.14 mm²
Conductor cross section solid max.	6 mm²
Conductor cross section AWG min.	26
Conductor cross section AWG max.	10
Conductor cross section flexible min.	0.14 mm²
Conductor cross section flexible max.	6 mm²
Min. AWG conductor cross section, flexible	26
Max. AWG conductor cross section, flexible	10
Conductor cross section flexible, with ferrule without plastic sleeve min.	0.14 mm²
Conductor cross section flexible, with ferrule without plastic sleeve max.	4 mm²
Conductor cross section flexible, with ferrule with plastic sleeve min.	0.14 mm²
Conductor cross section flexible, with ferrule with plastic sleeve max.	4 mm²
Internal cylindrical gage	A4
Connection method	Screw connection
Screw thread	M3
Stripping length	9 mm
Connection in acc. with standard	IEC 60947-7-3
Tightening torque, min	0.6 Nm
Tightening torque max	0.8 Nm
Conductor cross section solid min.	0.14 mm²
Conductor cross section solid max.	6 mm²
Conductor cross section AWG min.	26
Conductor cross section AWG max.	10
Conductor cross section flexible min.	0.14 mm²
Conductor cross section flexible max.	6 mm²
Min. AWG conductor cross section, flexible	26
Max. AWG conductor cross section, flexible	10

Lever-type disconnect terminal block - UT 4-PE/L/HEDI - 3214324

Technical data

Connection data

Conductor cross section flexible, with ferrule without plastic sleeve min.	0.14 mm²
Conductor cross section flexible, with ferrule without plastic sleeve max.	4 mm²
Conductor cross section flexible, with ferrule with plastic sleeve min.	0.14 mm²
Conductor cross section flexible, with ferrule with plastic sleeve max.	4 mm²

Standards and Regulations

Connection in acc. with standard	IEC 60947-7-3
	IEC 60947-7-3
Flammability rating according to UL 94	V0
Fire protection for rail vehicles (DIN EN 45545-2) R22	HL 1 - HL 3
Fire protection for rail vehicles (DIN EN 45545-2) R23	HL 1 - HL 3
Fire protection for rail vehicles (DIN EN 45545-2) R24	HL 1 - HL 3
Fire protection for rail vehicles (DIN EN 45545-2) R26	HL 1 - HL 3

Environmental Product Compliance

	Lead 7439-92-1
China RoHS	Environmentally Friendly Use Period = 50
	For details about hazardous substances go to tab “Downloads”, Category “Manufacturer's declaration”

Drawings

Circuit diagram

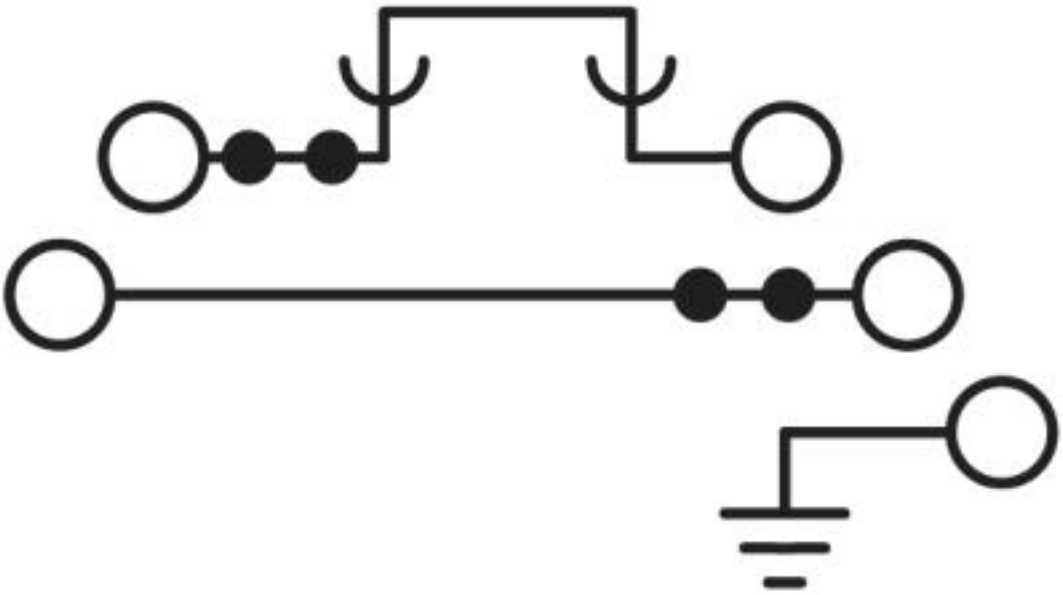

Approvals

Approvals

Lever-type disconnect terminal block - UT 4-PE/L/HEDI - 3214324

Approvals

Approvals

CSA / UL Recognized / cUL Recognized / EAC / cULus Recognized

Ex Approvals

IECEx / ATEX / UL Recognized / cUL Recognized / cULus Recognized

Approval details

CSA http://www.csagroup.org/services-industries/product-listing/ 13631

	B	C
Nominal voltage UN	300 V	300 V
Nominal current IN	16 A	16 A
mm²/AWG/kcmil	26-10	26-10

UL Recognized http://database.ul.com/cgi-bin/XYV/template/LISEXT/1FRAME/index.htm FILE E 60425

	B	C	D
Nominal voltage UN	300 V	300 V	
Nominal current IN	16 A	16 A	
mm²/AWG/kcmil	26-10	26-10	26-10

cUL Recognized http://database.ul.com/cgi-bin/XYV/template/LISEXT/1FRAME/index.htm FILE E 60425

	B	C	D
Nominal voltage UN	300 V	300 V	
Nominal current IN	16 A	16 A	
mm²/AWG/kcmil	26-10	26-10	26-10

EAC RU C-DE.A*30.B.01742

cULus Recognized

Phoenix Contact 2019 © - all rights reserved
http://www.phoenixcontact.com

PHOENIX CONTACT GmbH & Co. KG
Flachsmarktstr. 8
32825 Blomberg
Germany
Tel. +49 5235 300
Fax +49 5235 3 41200
http://www.phoenixcontact.com