ROHS COMPLIANT

PRODUCT DATA DRAWING

REVISION HISTORY			
REV	DESCRIPTION	DATE	APPROVED
-	NRN 44906	06/20	STW

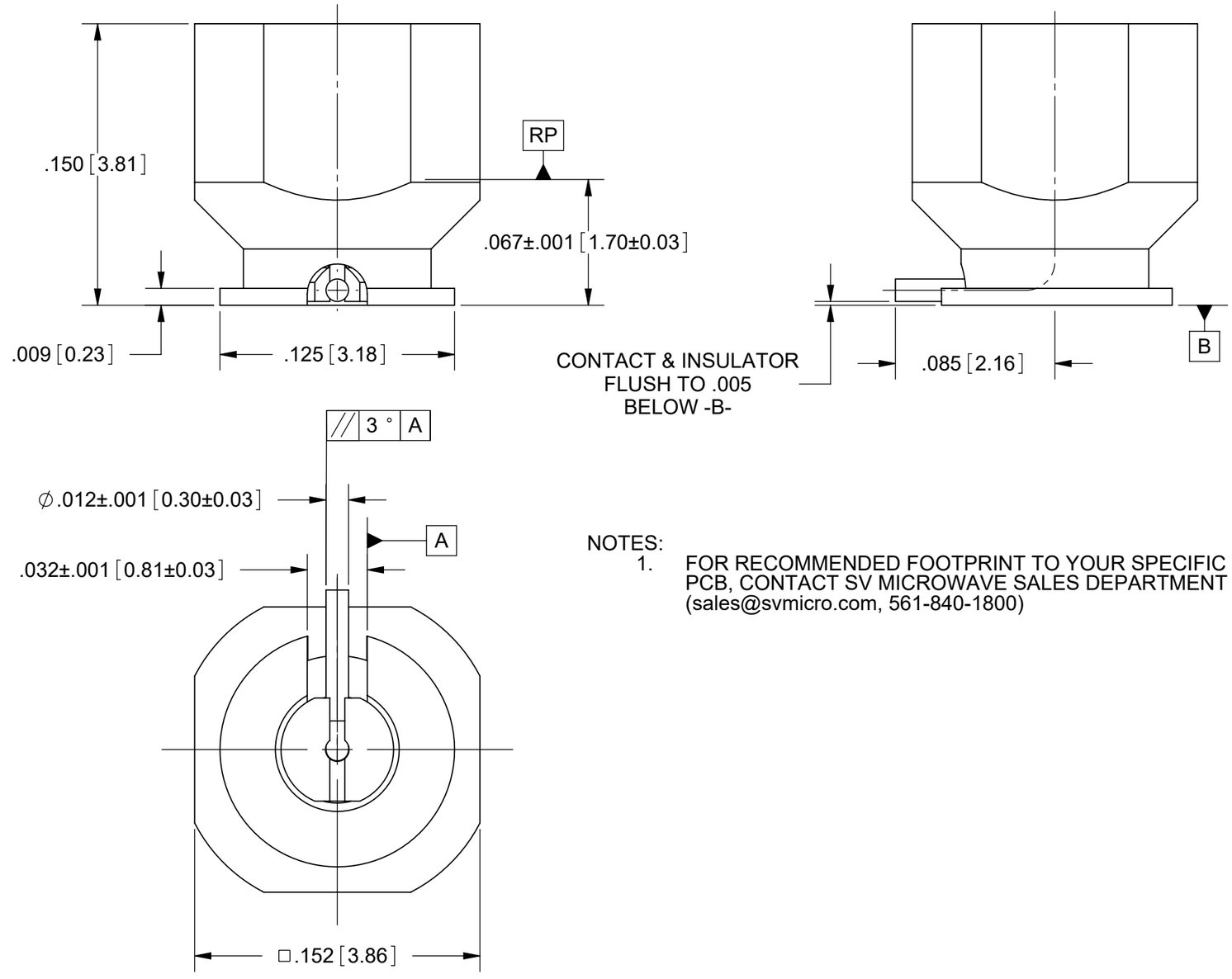

NOTES:

1. FOR RECOMMENDED FOOTPRINT TO YOUR SPECIFIC PCB, CONTACT SV MICROWAVE SALES DEPARTMENT (sales@svmicro.com, 561-840-1800)

MATERIAL:

BODY, CONTACT: BERYLLIUM COPPER

INSULATOR: POLYAMIDE-IMIDE (PAI)

FINISH:

BODY & CONTACT: GOLD OVER COPPER

PERFORMANCE:

IMPEDANCE: 50 OHMS
FREQ. RANGE: DC TO 20.0 GHz.

MATERIAL: SEE NOTES
FINISH: SEE NOTES
SURFACE AREA: N/A

PROPRIETARY

THE INFORMATION CONTAINED IN THIS DRAWING IS THE SOLE PROPERTY OF SV MICROWAVE, INC. ANY REPRODUCTION IN PART OR AS A WHOLE WITHOUT THE WRITTEN PERMISSION OF SV MICROWAVE, INC IS PROHIBITED.

DIMENSIONS ARE IN INCHES TOLERANCES:

FRACTIONAL: ±1/64 ANGULAR: X° ±1°0'
X°X' ±15'

DECIMAL: .X ±.030
.XX ±.010
.XXX ±.005

INTERPRET DIMENSIONS AND TOLERANCES PER ASME Y14.5M - 1994

THIRD ANGLE PROJECTION

UNLESS OTHERWISE SPECIFIED

1) ALL DIMENSIONS ARE IN INCHES [MILLIMETERS]
2) ALL DIMENSIONS ARE AFTER PLATING.
3) BREAK CORNERS & EDGES .005 R. MAX.
4) CHAM. 1ST & LAST THREADS.
5) SURFACE ROUGHNESS 63₄MIL-STD-10.
6) DIA.'S ON COMMON CENTERS TO BE CONCENTRIC WITHIN .005 T.I.R.
7) REMOVE ALL BURRS

DRAWN:	KRR 06/11/20	
CHECKED:	STW 06/11/20	
APPROVED:	STW 06/11/20	

Amphenol SV MICROWAVE
www.svmicrowave.com

TITLE: SMPM MALE FD (NON-MAGNETIC) SURFACE PC MOUNT WITH R/A CONTACT

SIZE B DWG. NO. 3211-40119

SCALE: 15:1 SHEET 1 OF 1