CONNECTOR DESIGNATORS

A-B*-C-D-E-F

G-H-J-K-L-S

*** Conn. Desig. B See Note 2**

DIRECT COUPLING

320 F S 002 M 16-3

- Product Series
- Connector Designator
- Angle and Profile S = Straight
- Basic Part No.
- Finish (Table II)
- Shell Size (Table I)
- Length (1/2 inch increments: e.g. 3 = 1.5 inches) Minimum order length 1.5 inches

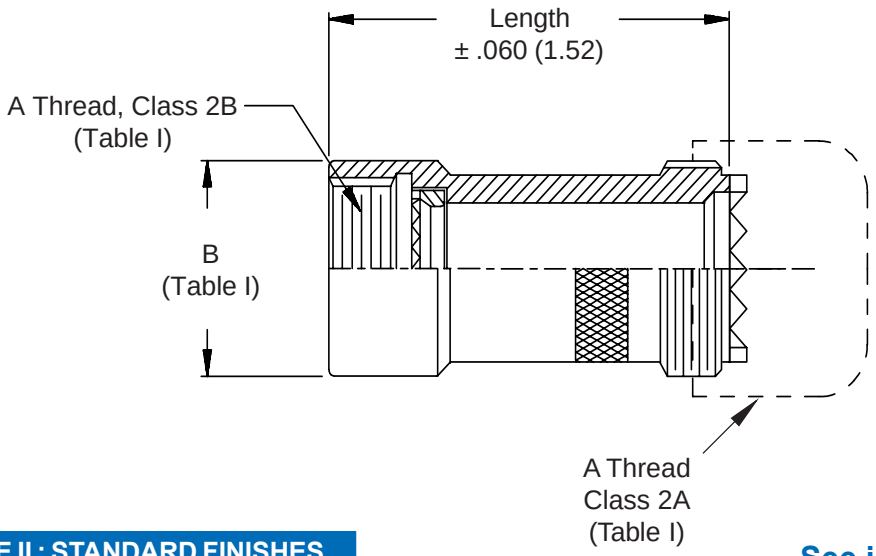

TABLE II : STANDARD FINISHES

GLENAIR SYMBOL	FINISH
B	Cadmium Plate, Olive Drab
C	Anodize, Black
G	Hard Coat, Anodic
M	Electroless Nickel
NF	Cadmium Plate, Olive Drab Over Electroless Nickel

See Back Cover for Complete Finish Information and Additional Finish Options

See inside back cover fold-out or pages 13 and 14 for unabridged Tables I and II.

1. Metric dimensions (mm) are indicated in parentheses.
2. When using Connector Designator B refer to pages 18 and 19 for part number development.

© 2005 Glenair, Inc.