32-Bit SiM3xxxx USB Debug Adapter User's Guide

1. Introduction

The 32-bit USB Debug Adapter (UDA) provides the interface between the PC's USB port and the Silicon Labs 32-bit target device's in-system debug/programming circuitry. The attached 10-pin debug ribbon cable connects the adapter to the target board and the target device's debug interface.

Note: This USB debug adapter supports only SiM3xxxx variants of the Silicon Labs 32-bit MCU portfolio and none of the other devices that can be referred to as "Silicon Labs 32-bit MCUs", including EFM32, EZR32, and EFR32 devices.

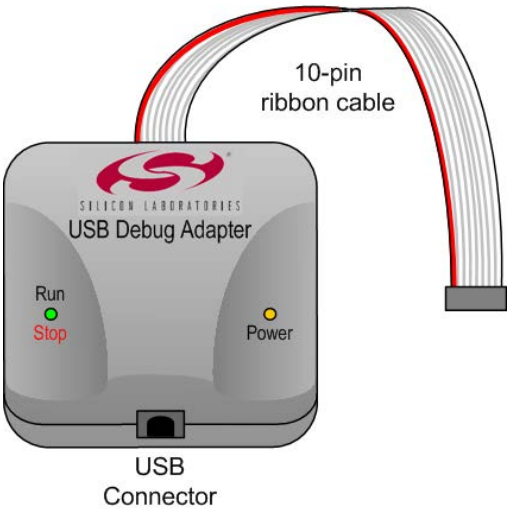

Figure 1. USB Debug Adapter

2. Relevant Documentation

Application notes can be found on the 32-bit MCU Application Notes web page: www.silabs.com/32bit-software.

- **AN667: *Getting Started with the Silicon Labs Precision32 IDE***—Describes the software setup and debugging process using the USB Debug Adapter.
- **AN678: *Precision32 Si32FlashUtility Command-Line Programmer User's Guide***—The programming utility and DLL discussed in this document uses the USB Debug Adapter to program the memory space of 32- bit devices.

 Copyright © 2017 by Silicon Laboratories

3. Pinout Specification

The 32-Bit USB Debug Adapter supports both JTAG and Serial Wire debug interfaces, and the adapter is powered from the USB connection to the PC. The adapter uses the standard ARM CoreSight 10-pin connector. Table 1 shows the pin definitions for the UDA keyed connector. The part number for the matching shrouded and keyed connector for a PCB is FTSH-105-01-F-F-K from Samtec. More information on the CoreSight connectors can be found here: http://www.keil.com/coresight/connectors.asp.

The USB Debug Adapter can automatically change the communication voltage level based on the level detected on pin 1 of the connector.

Note: The USB Debug Adapter requires a target system clock of 4 kHz or greater.

Table 1. USB Debug Adapter Debug Connector Pin Descriptions

Pin #	Description	Details
1	VREF	This is the I/O reference voltage and should normally be connected to the I/O voltage on the device (VIO, or VDD on devices without VIO).
2	SWDIO / TMS	Serial Wire Data I/O or JTAG TMS
3	GND (Ground)	
4	SWCLK / TCK	Serial Wire Clock or JTAG TCK
5	GND (Ground)	
6	SWO / TDO	Serial Wire Output (for Serial Wire Viewer or SWV) or JTAG TDO
7	Not Connected	
8	TDI	JTAG TDI
9	GND (Ground)	
10	RESETB	This pin should be connected to the RESETB pin of the device.

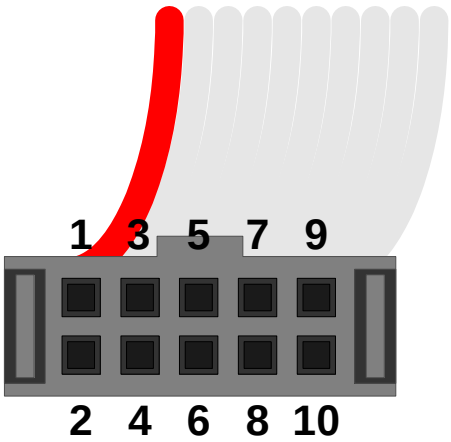

Figure 2. 32-Bit USB Debug Adapter Connector

4. Minimum C2 Programming Connections

The minimum required programming connections for the Serial Wire interface are VREF (pin 1), SWDIO (pin 2), SWCLK (pin 4), and ground (pins 3, 5, or 9). RESETB (pin 10) is highly recommended for debugging purposes, but is not required for production programming.

5. Hardware Setup using a USB Debug Adapter

Connect a 32-bit target board to a PC running the Silicon Laboratories Precision32 IDE via the USB Debug Adapter as shown in Figure 3.

1. Connect the USB Debug Adapter's 10-pin ribbon cable to the 10-pin CoreSight connector on the target board.
2. Connect one end of a standard USB cable to the USB connector on the USB Debug Adapter.
3. Connect the other end of the USB cable to a USB Port on the PC.
4. Power the target board.

Notes:

- Use the **Reset / Restart** button in the IDE to reset the target when connected using a USB Debug Adapter.
- Remove power from the target board and the USB Debug Adapter before connecting or disconnecting the ribbon cable from the target board. Connecting or disconnecting the cable when the devices have power can damage the device and/or the USB Debug Adapter.

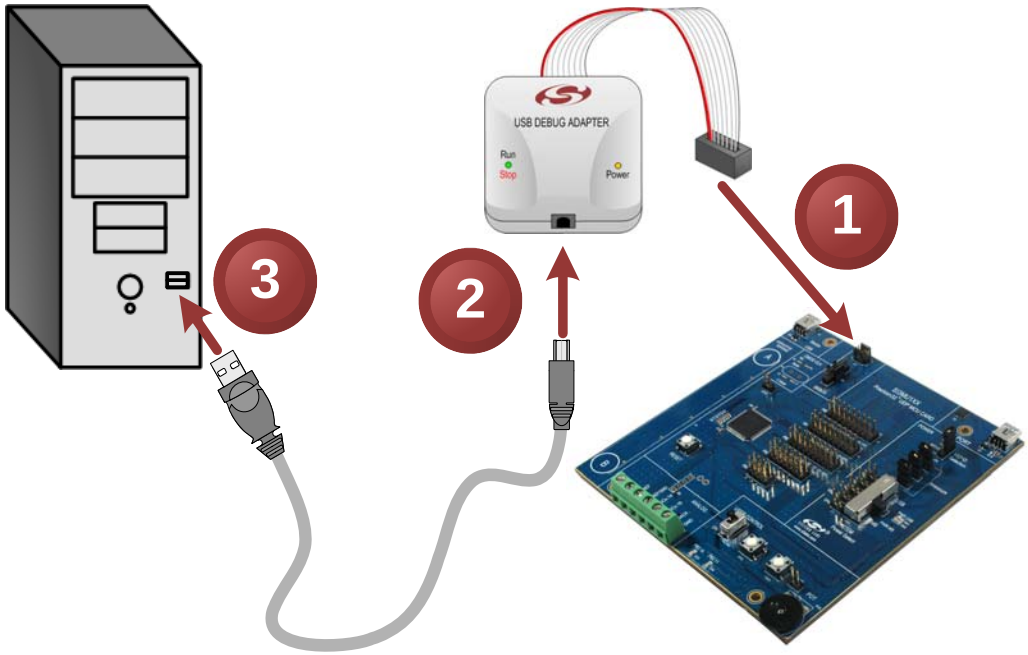

Figure 3. Hardware Setup using a USB Debug Adapter

6. USB Drivers

The USB Debug Adapter uses the Human Interface Device (HID) USB interface to communicate with the PC. Since most operating systems have this driver automatically built in, no drivers need to be installed to use the UDA.

7. Software Setup using a USB Debug Adapter

The Silicon Laboratories Precision32 IDE along with other software tools are provided for device development and debugging. The IDE is available for download from the Silicon Laboratories website (www.silabs.com/mcudownloads) and is also available on microcontroller development kit CD-ROMs.

7.1. Configuring the USB Debug Adapter in the Precision32 IDE

The IDE will automatically detect and use any UDAs connected to the PC when a Debug session starts. No additional configuration is required. If the IDE does not detect the UDA, ensure the adapter is enumerated in Device Manager as an HID device, it's connected to the target board, and the target device is powered.

8. Schematics

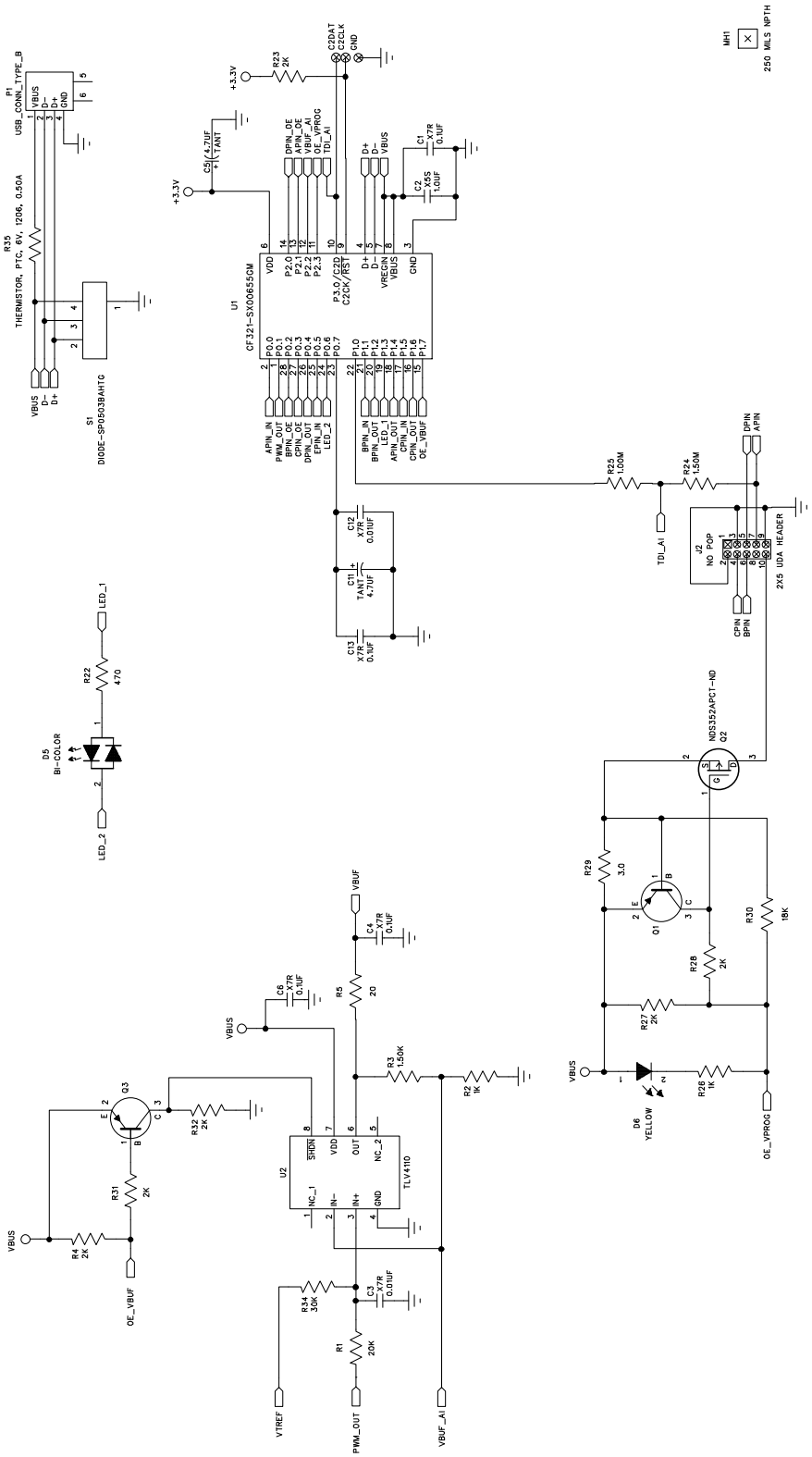

Figure 4. 32-Bit USB Debug Adapter Schematic (UDA-32) (page 1 of 2)

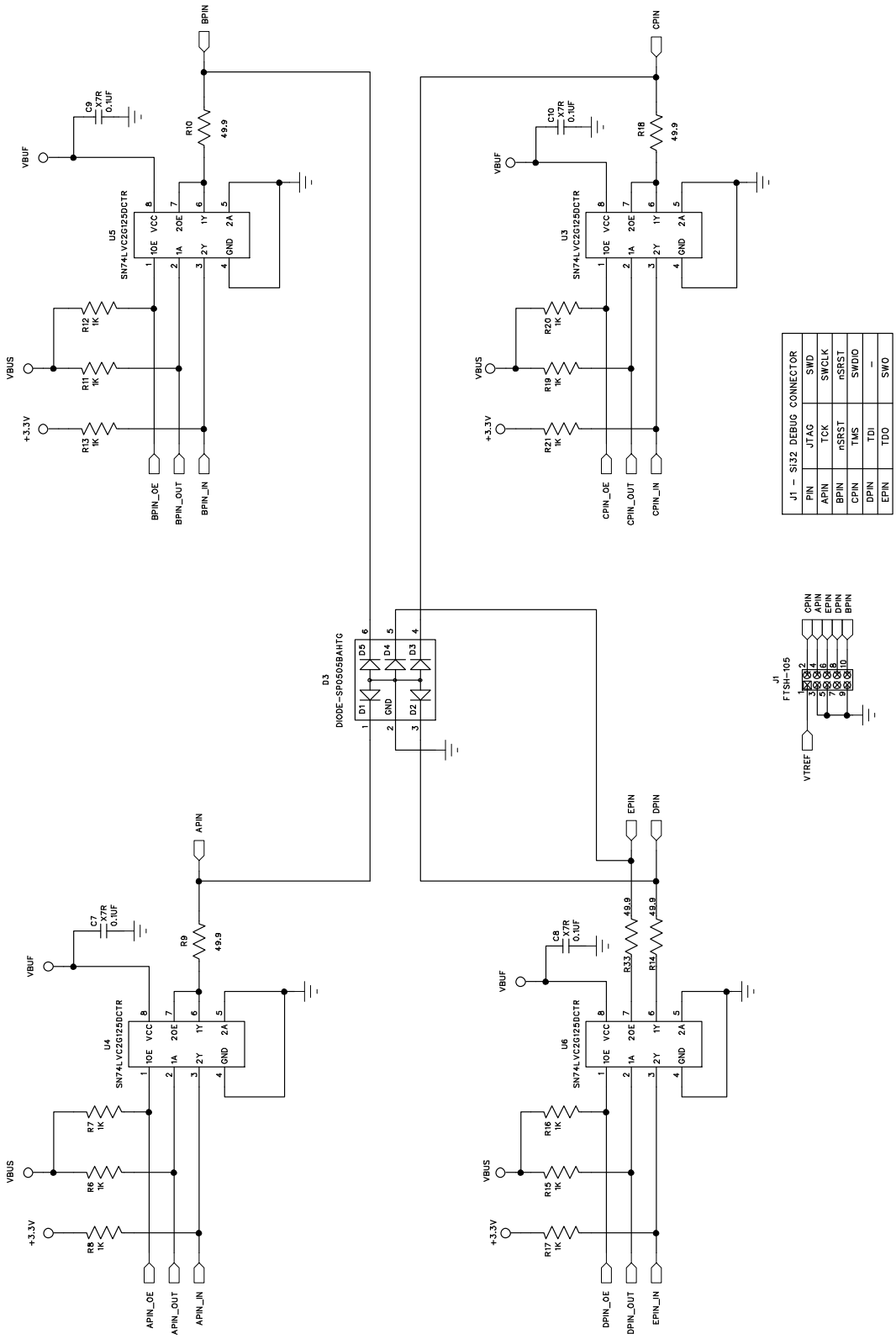

Figure 5. 32-Bit USB Debug Adapter Schematic (UDA-32) (page 2 of 2)

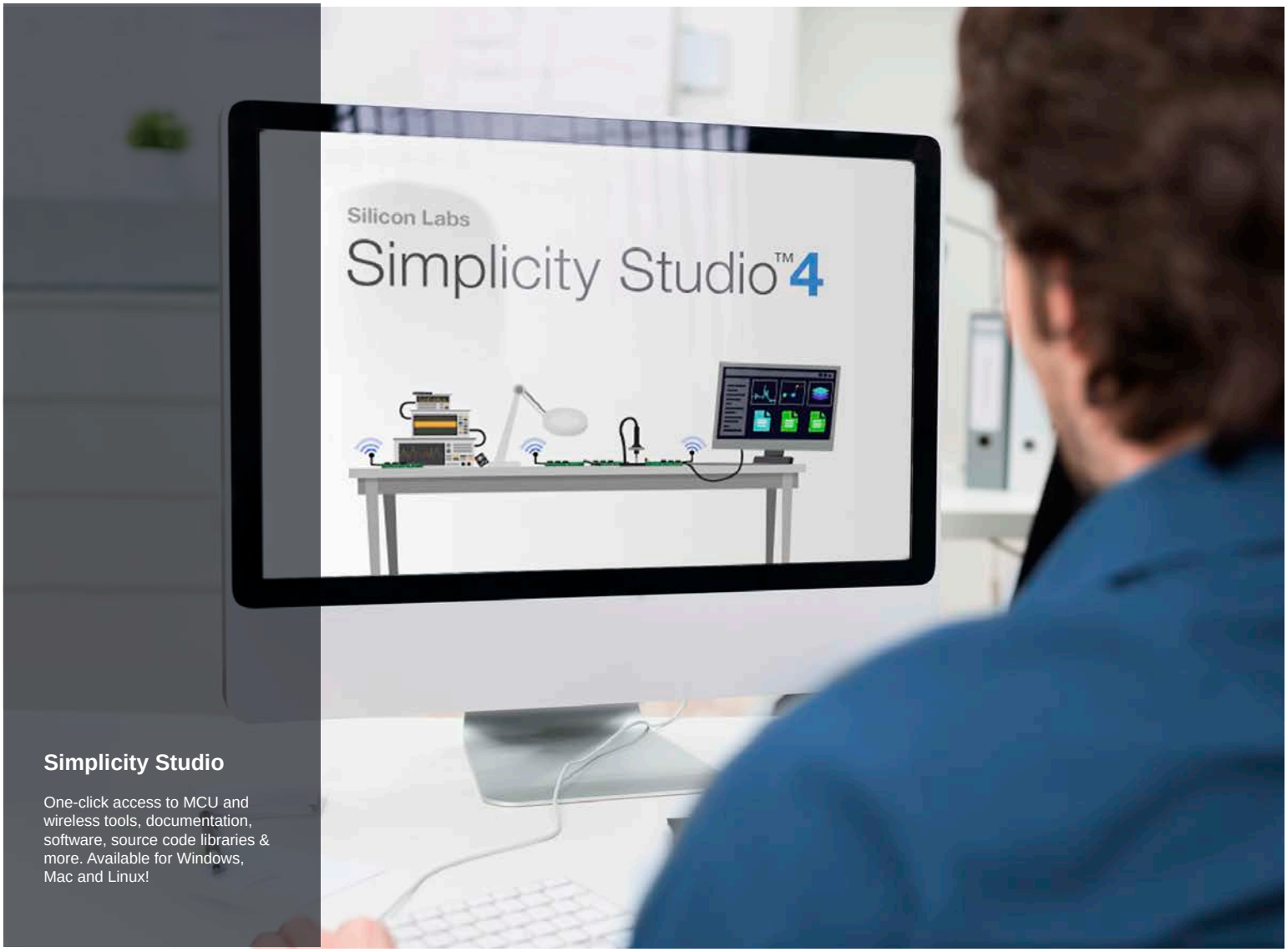

Simplicity Studio

One-click access to MCU and wireless tools, documentation, software, source code libraries & more. Available for Windows, Mac and Linux!

IoT Portfolio
www.silabs.com/IoT

SW/HW
www.silabs.com/simplicity

Quality
www.silabs.com/quality

Support and Community
community.silabs.com

Disclaimer
Silicon Labs intends to provide customers with the latest, accurate, and in-depth documentation of all peripherals and modules available for system and software implementers using or intending to use the Silicon Labs products. Characterization data, available modules and peripherals, memory sizes and memory addresses refer to each specific device, and "Typical" parameters provided can and do vary in different applications. Application examples described herein are for illustrative purposes only. Silicon Labs reserves the right to make changes without further notice and limitation to product information, specifications, and descriptions herein, and does not give warranties as to the accuracy or completeness of the included information. Silicon Labs shall have no liability for the consequences of use of the information supplied herein. This document does not imply or express copyright licenses granted hereunder to design or fabricate any integrated circuits. The products are not designed or authorized to be used within any Life Support System without the specific written consent of Silicon Labs. A "Life Support System" is any product or system intended to support or sustain life and/or health, which, if it fails, can be reasonably expected to result in significant personal injury or death. Silicon Labs products are not designed or authorized for military applications. Silicon Labs products shall under no circumstances be used in weapons of mass destruction including (but not limited to) nuclear, biological or chemical weapons, or missiles capable of delivering such weapons.

Trademark Information
Silicon Laboratories Inc.® , Silicon Laboratories®, Silicon Labs®, SiLabs® and the Silicon Labs logo®, Bluegiga®, Bluegiga Logo®, Clockbuilder®, CMEMS®, DSPLL®, EFM®, EFM32®, EFR, Ember®, Energy Micro, Energy Micro logo and combinations thereof, "the world's most energy friendly microcontrollers", Ember®, EZLink®, EZRadio®, EZRadioPRO®, Gecko®, ISOmodem®, Precision32®, ProSLIC®, Simplicity Studio®, SiPHY®, Telegesis, the Telegesis Logo®, USBXpress® and others are trademarks or registered trademarks of Silicon Labs. ARM, CORTEX, Cortex-M3 and THUMB are trademarks or registered trademarks of ARM Holdings. Keil is a registered trademark of ARM Limited. All other products or brand names mentioned herein are trademarks of their respective holders.

SILICON LABS

Silicon Laboratories Inc.
400 West Cesar Chavez
Austin, TX 78701
USA

http://www.silabs.com