319-136
Composite EMI/RFI Shield Sock
with Shrink Boot Porch and Self-Locking Rotatable Coupling

CONNECTOR DESIGNATOR:	
A	MIL-DTL-5015, -26482 Series II, and -83723 Series I and III
F	MIL-DTL-38999 Series I, II
H	MIL-DTL-38999 Series III and IV
SELF-LOCKING	
ROTATABLE COUPLING	
STANDARD PROFILE	

319	H	S	136	XW	19	12	B	R	T	14
Product Series *319 - EMI/RFI Shield Sock Assemblies*	**Connector Designator** *A, F, and H*	**Angle and Profile** *S - Straight* *T - 45° Elbow* *W - 90° Elbow*	**Basic Part Number**	**Finish Symbol** (See Table III)	**Connector Shell Size** (See Table II)	**Entry Diameter** (See Table IV)	**Optional Braid Material** Omit for Standard (See Table V)	**Split Ring / Band Option** Split Ring (687-749) and Band (600-052-1) supplied with R option (Omit for none)	**Shrink Boot Option** Shrink boot and o-ring supplied with T option (Omit for none)	**Custom Braid Length** Specify In Inches (Omit for Std. 12" Length)

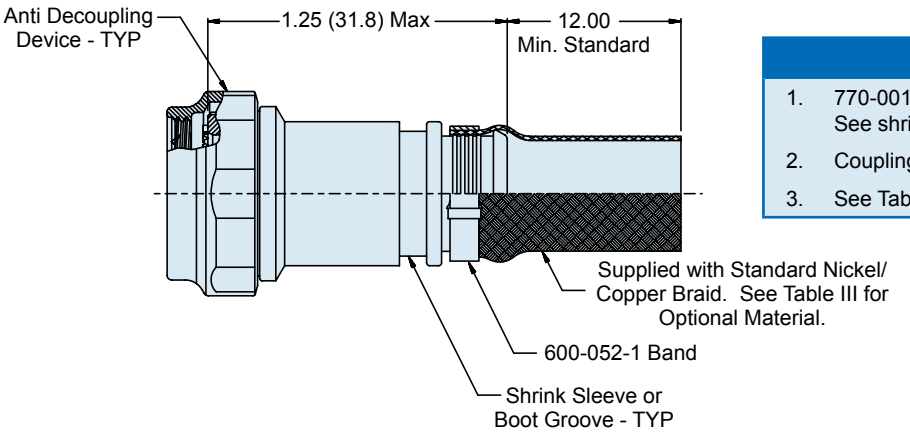

NOTES

1. 770-001S**-0 shrink boot supplied with T option. See shrink boot product page for more details.
2. Coupling nut supplied unplated.
3. See Table I in Intro for front-end dimensional details.

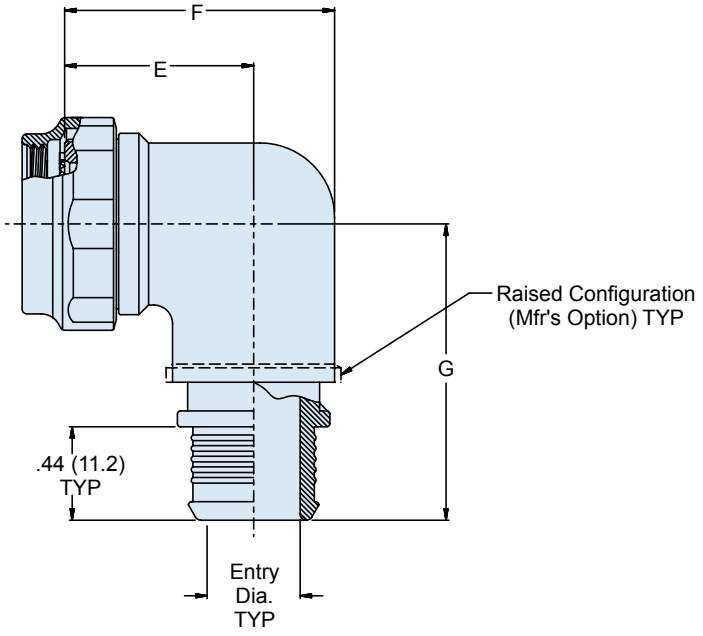

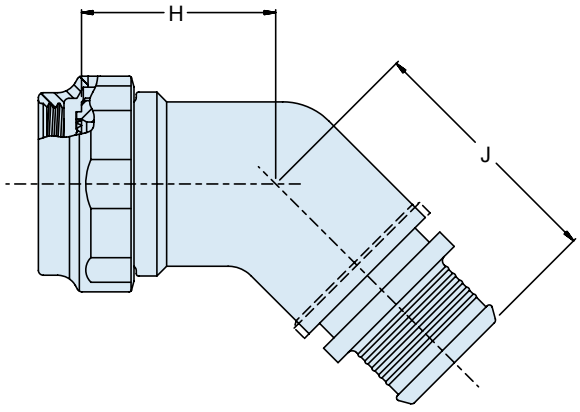

© 2009 Glenair, Inc.

319-136
Composite EMI/RFI Shield Sock
with Shrink Boot Porch and Self-Locking Rotatable Coupling

Glenair®

TABLE II: SHELL SIZE

Shell Size		E ± .06 (1.5)	F ± .09 (2.3)	G ± .09 (2.3)	H ± .06 (1.5)	J ± .09 (2.3)	Max. Entry Dash Number (Table III)
A, F	H						
08	09	.69 (17.5)	.88 (22.4)	1.19 (30.2)	.72 (18.3)	1.00 (25.4)	04
10	11	.75 (19.1)	1.00 (25.4)	1.25 (31.8)	.75 (19.1)	1.06 (26.9)	06
12	13	.81 (20.6)	1.13 (28.7)	1.31 (33.3)	.75 (19.1)	1.13 (28.7)	08
14	15	.88 (22.4)	1.31 (33.3)	1.38 (35.1)	.76 (19.3)	1.16 (29.5)	10
16	17	.94 (23.9)	1.38 (35.1)	1.44 (36.6)	.78 (19.8)	1.18 (30.0)	12
18	19	.97 (24.6)	1.44 (36.6)	1.47 (37.3)	.79 (20.1)	1.19 (30.2)	13
20	21	1.06 (26.9)	1.63 (41.4)	1.56 (39.6)	.82 (20.8)	1.22 (31.0)	15
22	23	1.13 (28.7)	1.75 (44.5)	1.63 (41.4)	.86 (21.8)	1.26 (32.0)	17
24	25	1.19 (30.2)	1.88 (47.8)	1.69 (42.9)	.89 (22.6)	1.29 (32.8)	19
28	-	1.34 (34.0)	2.13 (54.1)	1.78 (45.2)	.92 (23.4)	1.32 (33.5)	22

TABLE III: FINISH

Symbol	Finish Description
XM	2000 Hour Corrosion Resistant Electroless Nickel
XMT	2000 Hour Corrosion Resistant Ni-PTFE, Nickel-Fluorocarbon Polymer. *1000 Hour Grey™*
XW	2000 Hour Corrosion Resistant Cadmium Olive Drab Over Electroless Nickel

TABLE IV: ENTRY

Dash Number	Entry Diameter ± .03 (0.8)
03	.19 (4.8)
04	.25 (6.4)
05	.31 (7.9)
06	.38 (9.7)
07	.44 (11.2)
08	.50 (12.7)
09	.56 (14.2)
10	.63 (16.0)
11	.69 (17.5)
12	.75 (19.1)
13	.81 (20.6)
14	.88 (22.4)
15	.94 (23.9)
16	1.00 (25.4)
17	1.06 (26.9)
18	1.13 (28.7)
19	1.19 (30.2)
20	1.25 (31.8)
21	1.31 (33.3)
22	1.38 (35.1)

TABLE V: BRAID TYPE

Symbol	Braid Type
A	100% AmberStrand®
B	75%/25% AmberStrand® Blend
Standard	Nickel/Copper 34awg
T	Tin/Copper 34awg

© 2009 Glenair, Inc.