molex
one company > a world of innovation

This document was generated on 06/07/2010

PLEASE CHECK WWW.MOLEX.COM FOR LATEST PART INFORMATION

Part Number: 0039036064
Status: Active
Overview: standard_093
Description: 2.36mm (.093") Diameter Standard .093" Pin and Socket Receptacle Housing With Positive Latch, UL 94V-2, 6 Circuits

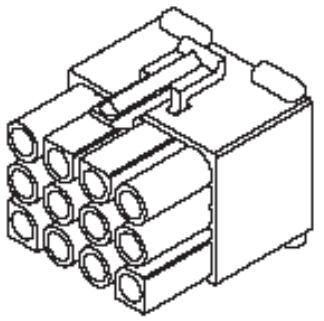

Series image - Reference only

Documents:

3D Model
Drawing (PDF)
Product Specification PS-3191-001 (PDF)
Product Specification PS-3191-003 (PDF)
Product Specification PS-3191-005 (PDF)
RoHS Certificate of Compliance (PDF)

Agency Certification

CSA	LR19980
TUV	R72081037
UL	E29179

General

Product Family	Crimp Housings
Series	3191
Comments	Polarized to Mating Part
Overview	standard_093
Product Name	Standard .093"

Physical

Breakaway	No
Circuits (maximum)	6
Circuits Detail	2x3
Color - Resin	Natural
Flammability	94V-2
Gender	Dual
Glow-Wire Compliant	No
Keying to Mating Part	None
Lock to Mating Part	Yes
Material - Resin	Nylon
Number of Rows	2
Packaging Type	Bag
Panel Mount	No
Pitch - Mating Interface (in)	0.264 In
Pitch - Mating Interface (mm)	6.71 mm
Polarized to Mating Part	Yes
Stackable	No
Temperature Range - Operating	-40°C to +105°C

Electrical

Current - Maximum per Contact	9A

Material Info

Old Part Number	3191-06R1

Reference - Drawing Numbers

Packaging Specification	SPK-3191-001
Product Specification	PS-3191-001, PS-3191-003, PS-3191-005, RPS-3191-001, RPS-3191-002
Sales Drawing	SD-3191-06R1-*

EU RoHS
ELV and RoHS Compliant
REACH SVHC
Contains SVHC: No
Halogen-Free Status
Halogen-Free

China RoHS

Need more information on product environmental compliance?

Email productcompliance@molex.com
For a multiple part number RoHS Certificate of Compliance, click here

Please visit the Contact Us section for any non-product compliance questions.

Search Parts in this Series
3191Series

Mates With
3191 Pin and Socket Plug, 5219 Vertical PCB Header

Use With
1189 Crimp Terminals, 1190 Crimp Terminals, 1380 Male Crimp Terminals, 1381 Female Crimp Terminals, 1433 Crimp Terminals, 1434 Male Crimp Terminals, 2605 , 2606 , 1973 , 2151 , 2273 , 2870 , 2871 , 4272 , Lin

This document was generated on 06/07/2010

PLEASE CHECK WWW.MOLEX.COM FOR LATEST PART INFORMATION

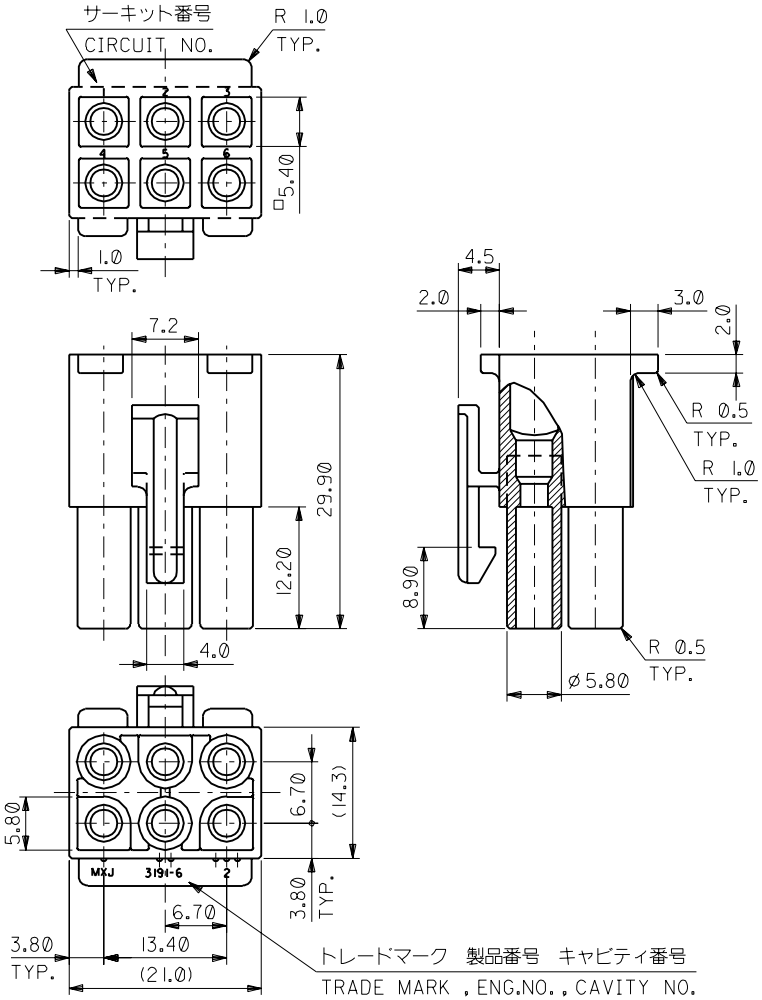

注)
NOTE.

1. ( ) 内寸法は参考
(DIMENSIONS IN ( ) ARE REFERENCE)

3191-06R1-201	39-03-6065	ナイロン66 NYLON66	94V-0
3191-06R1	39-03-6064	ナイロン66 NYLON66	94V-2
ENG.NO.	EDP.NO.	材料 MATERIAL NO.	

DWG. NO. SD-3191-06R1-*

DO NOT SCALE DRAWING

2C4NO. DRWN: CH'K: APPR:	2C3NO. DRWN: CH'K: APPR:	2C2NO. DRWN: CH'K: APPR:	2C1NO. DRWN: CH'K: APPR:	REDRAWN 2C0NO. JC2000-0626 DRWN: K.KOHAMA '00/ 3/28 CH'K: T.YAMAGUCHI '00/ 3/31 APPR: M.FUKUSHIMA '00/ 3/31	DESCRIPTION
					REV

MATERIAL 材料: 表参照 SEE TABLE

FINISH 仕上げ: —//—

WIRE RANGE 適用電線範囲: —//—

INS. RANGE 被覆外径: —//—

GENERAL TOLERANCES: (UNLESS SPECIFIED) 一般公差

10 UNDER 未満	±0.25 ~~±0.2~~
10 OVER 以上 30 UNDER 未満	±0.3 ~~±0.25~~
30 OVER 以上	±0.35 ~~±0.3~~
ANGLE 角度	±3°

SCALE 2:1

DESIGN UNITS ☒mm ☐INCH

THIRD ANGLE PROJECTION

DIMENSIONS: ☐ mm/INCH ☐ INCH/mm ☒ mm ONLY

SHT | REV

REVISE ON CAD ONLY

DRAWN BY & DATE K.KOHAMA '00/ 3/28

CHECKED BY & DATE T.YAMAGUCHI '00/ 3/31

APPROVED BY & DATE M.FUKUSHIMA '00/ 3/31

TITLE: 6 CKT. REC. HS'G (.093 DIA. TERM.)

molex MOLEX INCORPORATED

CAD FILENAME S319106.S10

MATERIAL NO. 3191-06R1-*

DRAWING NO. SD-3191-06R1-*

SHEET NO. 1

THIS DRAWING CONTAINS INFORMATION THAT IS PROPRIETARY TO MOLEX INCORPORATED AND SHOULD NOT BE USED WITHOUT WRITTEN PERMISSION.

SIZE B

S319106.S10

EN-02J(097) MXJ-54