1. Scope:

1.1 Contents

This specification covers the requirements for product performance, test methods and quality assurance provisions of .040III Series Air Bag Column Connector (Anti-half mate type).
Applicable product description and part numbers are as shown in Appendix 1.

2. Applicable Documents:

The following documents form a part of this specification to the extent specified herein. In the event of conflict between the requirements of this specification and the product drawing, the product drawing shall take precedence. In the event of conflict between the requirements of this specification and the referenced documents, this specification shall take precedence.

2.1 AMP Specifications:

A. 109-5000 : Test Specification, General Requirements for Test Methods
B. 114-5217 : Application Specification
Crimping .040III Series Unsealed Receptacle Contact
C. 501-5337 : Qualification Test Report

2.2 Commercial Standards and Specifications

A. JASO D605 : Electric Connector for automobiles
B. JASO D611 : Low-tension Cables with Thin Wall Insulation for Automobiles
C. JIS C3406 : Low-Voltage Wires and Cables for Automobiles

©Copyright 1999 by Tyco Electronics AMPK.K. All Rights Reserved.
* Trademark

3. Requirements:

3.1 Design and Construction:

Product shall be of the design, construction and physical dimensions specified on the applicable product drawing.

3.2 Material:

A. Contact:

a. Receptacle Contact

: Pre-tinned Cu Alloy and Gold plating Cu Alloy over Ni under plating

b. Tab Contact

: Pre-tinned brass and Gold plating brass over Ni under plating

B. Housing : PBT

3.3 Ratings

Temperature

:−40℃ to 105℃(Ambient temperature + temperature rise due to energized current)

3.4 Performance Requirements and Test Descriptions:

The product shall be designed to meet the electrical, mechanical and environmental performance requirements specified in Figure 1. All tests shall be performed in the room temperature, unless otherwise specified.

3.5 Test Requirements and Procedures Summary:

Para.	Test Items	Requirements	Procedures
3.5.1	Confirmation of Product	Product shall be conforming to the requirements of applicable product drawing and Application Specification.	Visually, dimensionally and functionally inspected per applicable quality inspection plan.
		Electrical Requirements	
3.5.2	Dielectric Strength	No creeping discharge nor flashover shall occur.	1kVAC for 1 minute. Test between adjacent circuits of mated connectors. Figure 2 AMP Spec. 109-5312
3.5.3	Insulation Resistance	100 MΩ Min. (Initial) 100 MΩ Min. (Final)	Impressed voltage 500V DC. Test between adjacent circuits of mated connectors. Figure 2 AMP Spec. 109-5310
3.5.4	Connector Mating Force	6Pos. : 49N Max. 8Pos. : 58～78N	Operation Speed : 100mm/min Measure the force required to mate, to unmate connector
3.5.5	Connector Unmating Force	6Pos. : 49N Max. 8Pos. : 78N Max.	
3.5.6	Connector Locking Strength	98N Min.	Operation Speed : 20mm/min Measure housing locking strength. AMP Spec. 109-5210
3.5.7	Contact Insertion Force	9.8N Max. (per one piece of contact)	Operation Speed : 100mm/min. Measure the force required to insert contact into housing. AMP Spec. 109-5211
3.5.8	Contact Retention Force	Primary lock : 39.2 N Min. W/TPA : 98 N Min.	Operation Speed : 200 mm/min. Measure the contact retention force required. AMP Spec. 109-5212
3.5.10	Crimp Tensile Strength	Wire Size: mm^2 / AWG; Crimp Tensile Strength (MIN): N 0.3 / #22 / 58.8 0.5 / #20 / 88.2	Operation Speed : 200 mm/min Apply an axial pull-off load to crimped wire of contact secured on the tester.

Fig. 1

3.6 Product Qualification Test Sequence

Test Items	Test Group				
	1	2	3	4	5
	Test Sequence (a)				
Confirmation of Product	1,4	1	1	1	1
Dielectric Strength	2				
Insulation Resistance	3				
Connector Mating Force		2			
Connector Unmating Force		3			
Housing Locking Strength			2		
Contact Insertion Force				2	
Contact Retention Force				3	
Crimp Tensile Strength					2

(a) Numbers indicate sequence in which tests are performed.

(b) Number of Specimens : Each sample group used for the specified performance tests, shall consists of not less than 20 sets of contacts and not less than 3 sets of connector assembles.

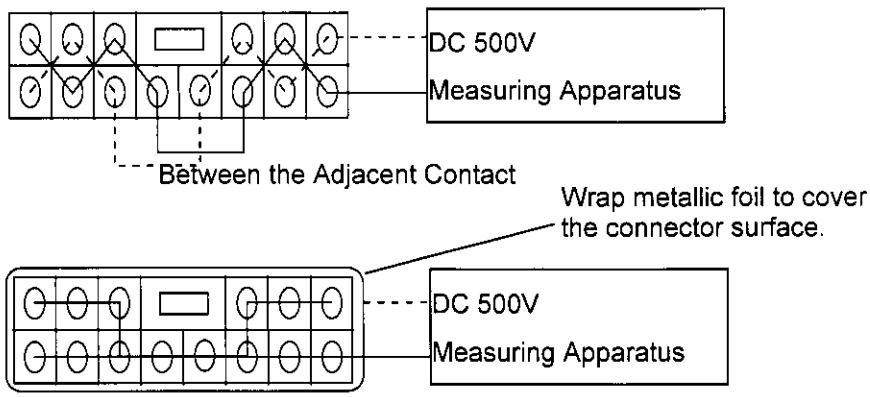

Between the Contacts and Housing

Fig. 2

The applicable product descriptions and part numbers (examples) are as shown in Appendix. 1

Appendix 1

Product Part No.	Description
316836	.040 III Unsealed Receptacle Contact (S) Pre-Tin
316837	.040 III Unsealed Receptacle Contact (S) Au
1318825-7	6 Positions Plug Housing Assembly , Air Bag Column Connector
1318828-6	8 Positions Plug Housing Assembly , Air Bag Column Connector

(a) Applicable cap housing assembly for test must be regular dimensions (See R1318825-GEN)