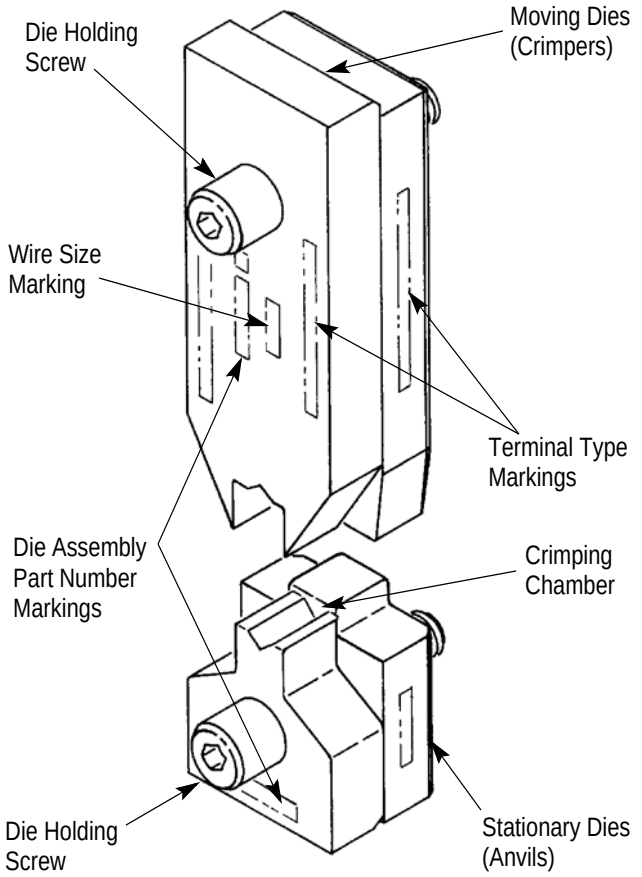

Figure 1

1. INTRODUCTION

Crimping Die Assemblies 58268-1 and 58268-2 are designed for use in the AUTO-PRO* Machine 818380-1 equipped with Applicator 818058-2. Each die assembly, when installed in the machine, will crimp Ultra-Fast Plus Fully Insulated FASTON* Terminals 520401-[ ] onto wire sizes No. 22-18 AWG (die assembly -1) and terminals 520402-[ ] onto wire sizes No. 16-14 AWG (die assembly -2).

These instructions provide specific information regarding the die assemblies and applicable terminals. For general performance of the machine, refer to 408-9491, packaged with the machine. For specific information on the applicator, refer to 408-8092.

NOTE

Dimensions in this instruction sheet are in metric units [with U.S. customary units in brackets]. Figures are not drawn to scale.

Reasons for reissue are provided in Section 7, REVISION SUMMARY.

2. DESCRIPTION

Each die assembly consists of two stationary dies (anvils) and two moving dies (crimpers) which when closed form the crimping chamber. The stationary dies feature a die holding screw and have the die assembly part number marking. The moving dies also feature a die holding screw and have the die assembly part number, specific wire size, and terminal type markings. See Figure 1.

The translucent color of the insulation on the terminal indicates a specific wire range and must match the wire size marking on the die assembly for crimping. Refer to Figure 2.

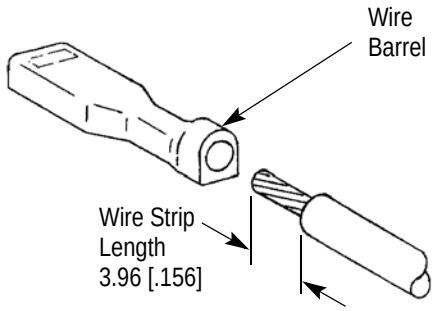

NOTE: Not to Scale

WIRE		TERMINAL		CRIMPING DIE ASSY PART NUMBER
SIZE (AWG)	INSULATION DIA (Max)	PART NUMBER	COLOR	
22-18	3.43 [.135]	520401-[ ]	Red	58268-1
16-14	4.06 [.160]	520402-[ ]	Blue	58268-2

Figure 2

3. DIE INSTALLATION AND REMOVAL

The anvils and crimpers can be installed and removed from the machine by tightening or loosening the die holding screws. Refer to 408-8092 for specific instructions on die installation and removal.

DANGER

STOP

To avoid personal injury, always disconnect electrical and air supply before installing or removing dies. Close lockout valve and apply lock to prevent accidental cycling of machine.

©2011 Tyco Electronics Corporation, a TE Connectivity Ltd. Company
All Rights Reserved
*Trademark

TE Connectivity, TE connectivity (logo), and TE (logo) are trademarks. Other logos, product and/or Company names may be trademarks of their respective owners.

4. CRIMPING PROCEDURE

Refer to Figure 2 and select a terminal for the wire of the specified size. Strip the wire to the length indicated, taking care not to cut or nick the wire strands. Make sure the die assembly is compatible with the terminal being used.

Position the terminal in the die assembly as instructed in 408-8092 and follow the specific instructions for crimping .187 Series Ultra-Fast Plus Terminals.

5. MAINTENANCE AND INSPECTION

5.1. Maintenance

1. Remove dust, moisture and other contaminants with a clean brush, or a soft, lint-free cloth. Do not use objects that could damage the dies.

2. Make certain that all surfaces are protected with a thin coat of any good SAE No. 20 motor oil. Do not oil excessively.

3. When dies are not in use, store in a clean, dry area.

5.2. Periodic Inspection

Regular inspections should be performed with a record of inspections remaining with the dies and/or supervisory personnel responsible for them.
TE Connectivity recommends one inspection per month; however, amount of use, working conditions, operator training and skill, and established company standards should determine frequency of inspection. The inspection should be performed in the following sequence:

A. Visual Inspection

1. Remove all lubrication and accumulated film by immersing the dies in a suitable commercial degreaser that will not affect paint or plastic material.

2. Make sure all die holding screws, retaining rings, and die components are in place and secured. Refer to Section 6, REPLACEMENT AND REPAIR, if replacements are necessary.

3. Check all bearing surfaces for wear. Replace worn components.

4. Inspect the crimping chamber for flattened, chipped, cracked, worn, or broken areas. If damage is evident, the dies must be repaired before returning them to service. See Section 6, REPLACEMENT AND REPAIR.

B. Gaging the Crimping Chamber

This inspection requires the use of a plug gage conforming to the dimensions in Figure 3. TE does not manufacture or market these gages. To gage the crimping chamber, proceed as follows:

1. Remove traces of oil or dirt from crimping chamber and plug gage.

2. Mate the dies until it is evident that the dies have bottomed, then HOLD in this position. Do NOT force the dies beyond initial contact.

3. Align the GO element with the crimping chamber. Push element straight into the crimping chamber without using force. The GO element must pass completely through. Refer to Figure 3.

NOTE

Insert INSULATION plug gage in the crimping chamber from the FRONT side of the die assembly and insert WIRE BARREL plug gage in the BACK side of the die assembly.

4. Now align the NO-GO element and try to insert it straight into the same crimping chamber. The NO-GO element may start entry but must not pass completely through as shown in Figure 3.

If the crimping chamber conforms to the gage inspection, the die assembly is considered dimensionally correct and should be lubricated with a THIN coat of any good SAE No. 20 motor oil. If not, the die assembly must be repaired before returning it to service. See Section 6, REPLACEMENT AND REPAIR.

For additional information concerning the use of the plug gage, refer to instruction sheet 408-7424.

6. REPLACEMENT AND REPAIR

Replacement parts or recommended spares are listed in Figure 4. The recommended spares should be stocked for immediate replacement. Order replacement parts through your TE representative or call 1-800-526-5142, or write to:

CUSTOMER SERVICE (038-035)
TYCO ELECTRONICS CORPORATION
PO BOX 3608
HARRISBURG PA 17105-3608

7. REVISION SUMMARY

Since the previous version of this document, the following changes were made:

- Updated document to corporate requirements.

SUGGESTED PLUG GAGE DESIGN FOR INSULATION BARREL CRIMP

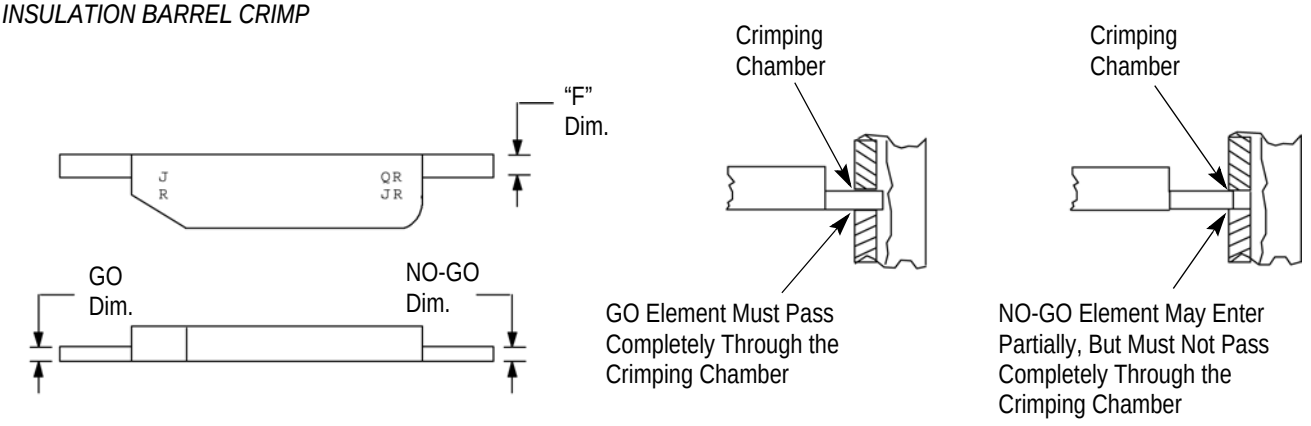

SUGGESTED PLUG GAGE DESIGN FOR WIRE BARREL CRIMP

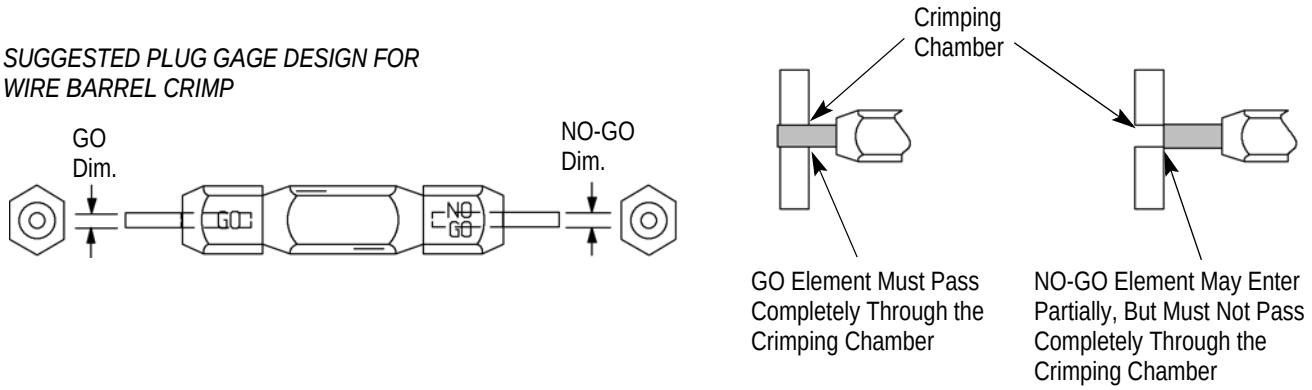

DIE ASSEMBLY PART NUMBER	GAGE ELEMENT DIMENSIONS				
	INSULATION BARREL CRIMP		WIRE BARREL CRIMP		"F" DIM.
	GO	NO-GO	GO	NO-GO	
58268-1	1.473-1.491 [0.0580-0.0587]	1.829-1.847 [0.0720-0.0727]	1.872-1.880 [0.0737-0.0740]	1.981-1.989 [0.0780-0.0783]	4.32 [0.170]
58268-2	1.829-1.847 [0.0720-0.0727]	2.184-2.202 [0.0860-0.0867]	2.024-2.032 [0.0797-0.0800]	2.134-2.141 [0.0840-0.0843]	

Figure 3

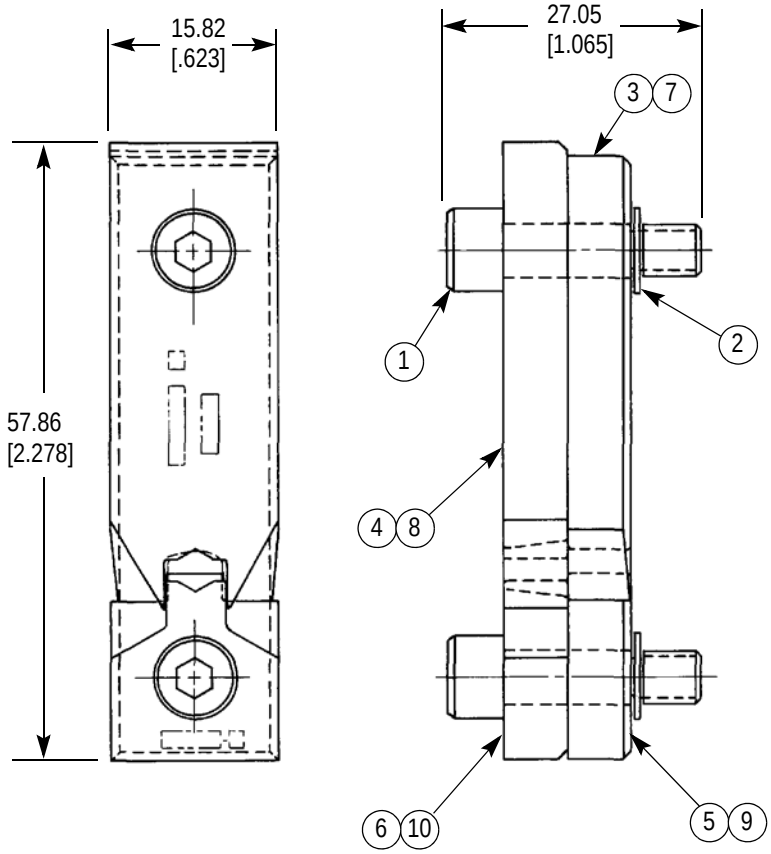

WEIGHT: 595 g [1.5 oz]

REPLACEMENT PARTS				
ITEM	PART NUMER	DESCRIPTION	QTY PER ASSEMBLY	
			DIE ASSEMBLY 58268-1	DIE ASSEMBLY 58268-2
1	1-59781-4	SCREW, Die Holding	2	2
2	1-21046-3	RING, Retaining	2	2
3	313355-1	CRIMPER, Wire	1	- -
4	313357-1	CRIMPER, Insulation	1	- -
5	313356-1	ANVIL, Wire	1	- -
6	313358-1	ANVIL, Insulation	1	- -
7	313355-2	CRIMPER, Wire	- -	1
8	313357-2	CRIMPER, Insulation	- -	1
9	313356-2	ANVIL, Wire	- -	1
10	313358-2	ANVIL, Insulation	- -	1

Figure 4