ORIGINAL INSTRUCTIONS

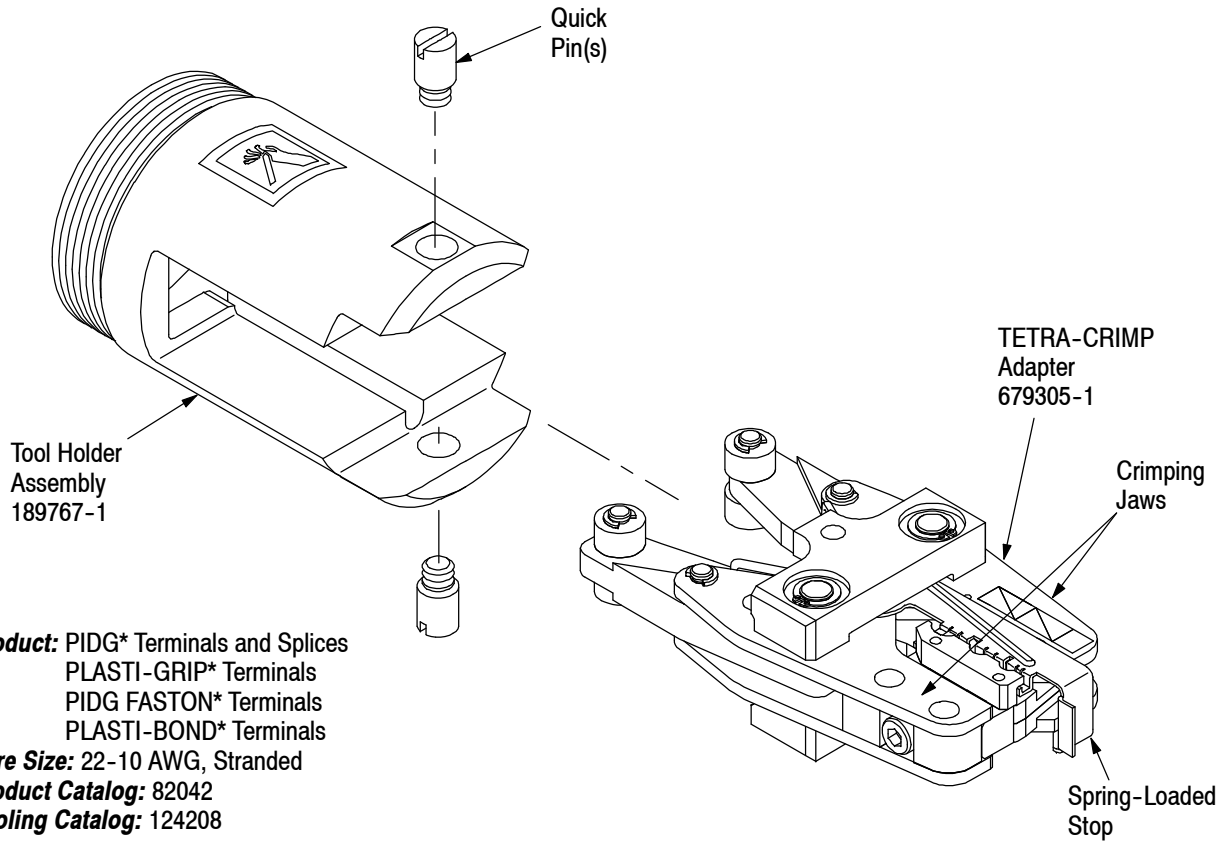

Product: PIDG* Terminals and Splices
PLASTI-GRIP* Terminals
PIDG FASTON* Terminals
PLASTI-BOND* Terminals
Wire Size: 22-10 AWG, Stranded
Product Catalog: 82042
Tooling Catalog: 124208

Figure 1

1. INTRODUCTION

Pneumatic TETRA-CRIMP Adapter 679305-1, shown in Figure 1, is designed to crimp the terminals and splices listed in Figure 2. The adapter is used with 626 Pneumatic Tooling Assemblies 189721-1 and 189722-1 when fitted with Tool Holder Assembly 189767-1.

This instruction sheet provides recommended procedures for insulation crimp adjustments, wire preparation, crimp head installation, crimping, and maintenance and inspection. For questions concerning the setup and operation of the pneumatic tools, see Customer Manual 409-5862.

Read these instructions thoroughly before proceeding.

NOTE

Dimensions are in millimeters [followed by inches in brackets]. Figures and illustrations are for reference only and are not drawn to scale.

Reasons for reissue are in Section 7, REVISION SUMMARY.

PRODUCT	WIRE SIZE (AWG)	STRIP LENGTH (±0.40 [±.016])	CRIMP DOT CODE
PIDG and PLASTI-GRIP Ring Tongue Terminals	22-16	5.56 [.219]	1
	16-14		2
	12-10	8.33 [.328]	1
	16-14 HD		
PIDG Butt Splices	22-16	6.75 [.266]	1
	16-14		2
	12-10	9.13 [.359]	1
PIDG FASTON Terminals	22-18	7.94 [.313]	1
	16-14		2
	12-10	8.73 [.344]	1
PIDG Insulation Restriction Ring Tongue Terminals	22-18	6.75 [.266]	1
	16-14		2
	12-10	9.92 [.391]	1
PLASTI-BOND Terminals	16-14	7.94 [.313]	2
	12-10	8.33 [.328]	1
	20-16 HD	5.56 [.219]	2
	16-14 HD	8.33 [.328]	1

Figure 2

©2010 Tyco Electronics Corporation, Berwyn, PA
All Rights Reserved
TE logo and Tyco Electronics are trademarks.
*Trademark. Other product names, logos, or company names might be trademarks of their respective owners.

2. DESCRIPTION (Figure 1)

The adapter is designed with two crimping jaws and a spring–loaded stop. When closed, the jaws form three crimping chambers, each labeled by color on the jaw of the adapter. The color indicates the wire size and must match the insulation color of the terminal or splice: yellow (12–10), blue (16–14), red (22–16), black (16–14 heavy duty), and green (20–18 heavy duty).

The stop aids in positioning the terminal or splice between the jaws. After the operator locates the terminal or splice and inserts the stripped wire, the tool is activated to complete the crimp. The crimped terminal or splice will display a crimp dot code which indicates that the correct crimping chamber was used.

3. ADAPTER INSTALLATION AND REMOVAL

NOTE

The adapter is coated with a preservative to prevent rust and corrosion. Wipe the preservative from the adapter, particularly from the crimping area, before installation.

DANGER

Before installing or removing the adapter, DISCONNECT THE TOOL FROM THE AIR SUPPLY. After installation, ALWAYS ensure that the tool holder assembly quick pins are fully tightened to avoid personal injury or damage to the tool.

1. Remove quick pins from the tool holder.

2. Insert adapter into the tool holder as shown in Figure 1.

3. After adapter is properly aligned, insert and tighten the quick pins.

NOTE

Tyco Electronics recommends using LOCTITE† 242 removable threadlock, or equivalent, to prevent the quick pins from loosening.

4. Connect tool to an adequate air supply. For specific information on air line requirements and air hose installation, refer to the instructions packaged with the pneumatic tooling assembly.

For removal, remove quick pins from tool holder assembly; then remove adapter from tool holder assembly.

4. CRIMPING PROCEDURE (Figure 3)

Strip the wire to the appropriate length according to the dimensions shown in Figure 2. Then proceed as follows:

CAUTION

Do NOT operate tool without adapter installed.

DANGER

To avoid personal injury or damage to the tool, always keep fingers clear of crimping jaws, and frequently check to ensure that the quick pins are fully tightened.

1. Open the crimping jaws by squeezing the rollers together.

2. Center the wire barrel of terminal or splice in the appropriate crimping chamber on the jaw with the stop.

   a. If crimping a terminal, make sure the flat side of the terminal faces away from the stop. See Figure 3, Detail A.

   b. If crimping a splice, seat the splice window indent on the stop. See Figure 3, Detail B.

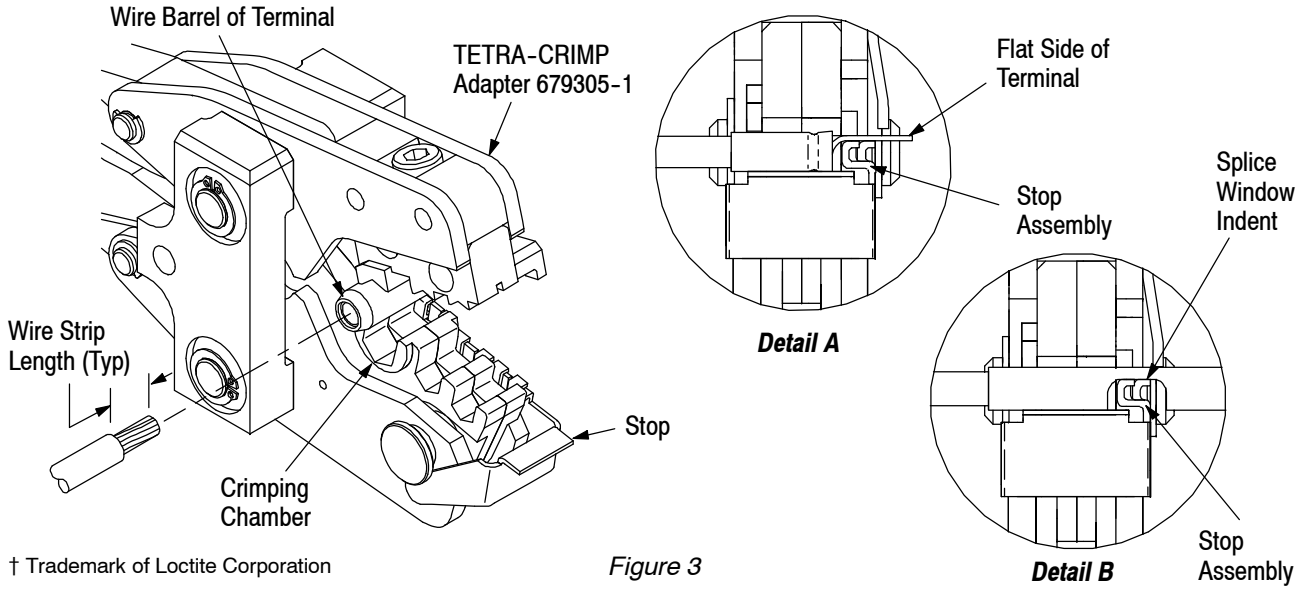

Figure 3

† Trademark of Loctite Corporation

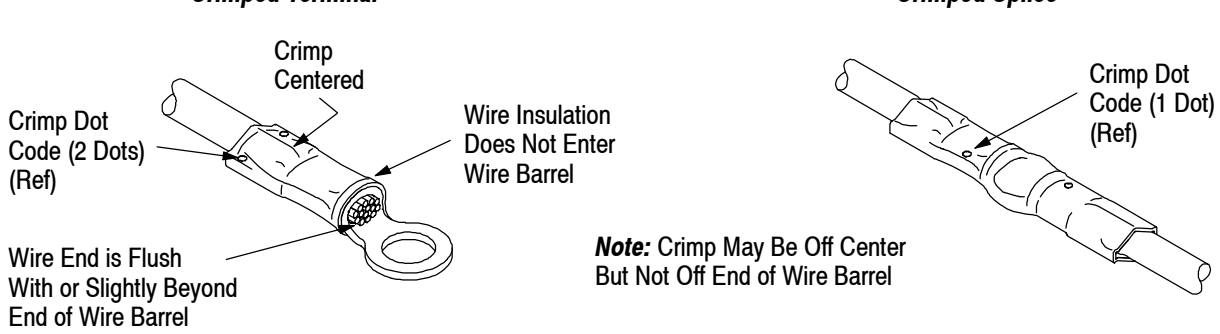

Figure 4

3. After the wire barrel is properly positioned, release the rollers to allow the jaws to spring shut, holding the terminal or splice in place.

4. Insert the stripped wire into the wire barrel until the wire bottoms.

5. Activate tool to complete the crimp. Open the crimping jaws by squeezing the adapter rollers together; then remove the crimped terminal or splice.

6. If crimping a splice, position the uncrimped end in the crimping chamber and repeat the crimping procedure.

7. Inspect terminal or splice to ensure a proper crimp. Refer to Figure 4.

NOTE

A properly crimped terminal or splice will display a crimp dot code on the terminal insulation. For applicable crimp dot codes, refer to Figure 2.

5. MAINTENANCE AND INSPECTION

DANGER

To avoid injury, DISCONNECT TOOL FROM AIR SUPPLY before performing any maintenance or inspection procedures.

Tyco Electronics recommends that a maintenance and inspection program be performed periodically to ensure dependable and uniform terminations. The adapter should be inspected once a month. Frequency of inspection should be adjusted to suit your requirements through experience, and depends on:

1. The care, amount of use, and handling of the adapter.

2. The type and size of the products crimped.

3. The degree of operator skill.

4. The presence of abnormal amounts of dust and dirt.

5. Your own established standards.

Each adapter is thoroughly inspected before packaging. Since there is the possibility of damage during shipment, the adapter should be inspected immediately upon arrival at your facility in accordance with Figure 5 and Paragraph 5.2,B, Gaging the Crimping Chamber.

5.1. Maintenance

A. Cleaning

Remove dust, moisture, and other contaminants with a clean, soft brush, or a soft, lint-free cloth. Do NOT use objects that could damage the adapter. Relubricate adapter, as instructed in Paragraph 5.1,B, Lubrication, before placing it back into service.

B. Lubrication

Lubricate all pins, pivot points, and bearing surfaces with a high quality grease. Tyco Electronics recommends the use of Molykote‡ grease, which is a commercially available lubricant. Lubricate according to the following schedule:

Adapter used in daily production – lubricate daily
Adapter used daily (occasional) – lubricate weekly
Adapter used weekly – lubricate monthly

Wipe excess grease from adapter, particularly from jaw closure areas. Grease transferred from the jaw closure area onto certain terminations may affect the electrical characteristics of an application.

5.2. Periodic Inspection

A. Visual Inspection

1. Inspect the adapter for missing pins and retaining rings. If parts are missing or defective, replace them by referring to Figure 5.

2. Check all bearing surfaces for wear. Make sure the rollers turn freely with minimal resistance. Replace any worn parts.

‡ Trademark of Dow Corning Corporation

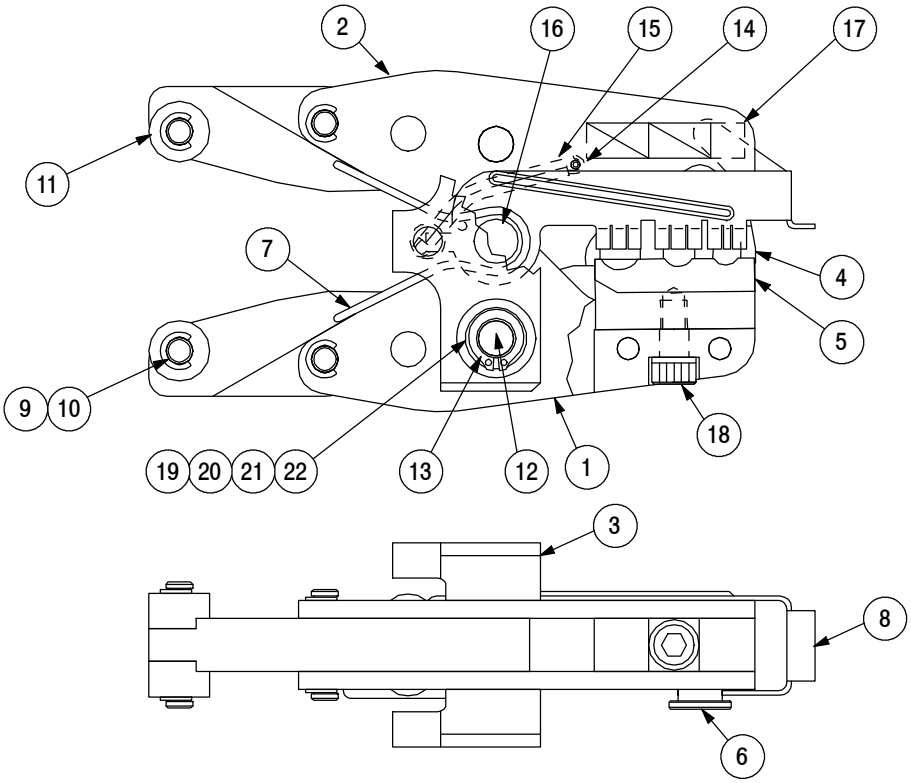

REPLACEMENT PARTS

ITEM	PART NO.	DESCRIPTION	QTY PER ADAPTER	ITEM	PART NO.	DESCRIPTION	QTY PER ADAPTER
1	217450-1	JAW, Assembly, Bottom	1	12	6-23629-1	PIN, Straight Grooved	2
2	217451-1	JAW, Assembly, Top	1	13	1-21048-0	RING, Retaining	4
3	679261-1	LINK	2	14	21028-8	PIN, Slotted Spring	1
4	310611-1	JAW RIVET ASSEMBLY	1	15	310690-1	SPRING, Extension	1
5	310607-1	FIXED JAW ASSEMBLY	1	16	679495-2	PIN	1
6	122637-1	PIN, Toggle Link	1	17	852980-1	LABEL, Vinyl	1
7	122701-1	SPRING	1	18	3-21000-4	SCREW, Socket Head Cap	1
8	310581-1	STOP, Terminal and Wire	1	19	301185-6	SHIM, 0.20 [.008]●	AR
9	3-23620-3	PIN, Straight Grooved	2	20	301185-7	SHIM, 0.25 [.010]●	AR
10	21045-6	RING, Retaining	4	21	301185-8	SHIM, 0.30 [.012]●	AR
11	314479-2	ROLLER	4	22	301185-9	SHIM, 0.38 [.015]●	AR

● Add shim to reduce gap 0.18 [.007] (max) between Link (Item 3) and Straight Grooved Pin (Item 9).

Figure 5

3. Inspect the crimping area for flattened, chipped, or broken areas. Although the crimping chambers may gage within permissible limits, worn or damaged jaw closure surfaces are objectionable and will affect the quality of the crimp.

B. Gaging the Crimping Chamber

An inspection should be performed periodically to check the jaw closure for excessive wear. The jaw closure inspection is accomplished using plug gages. Tyco Electronics neither manufacturers nor sells plug gages. A suggested plug gage design and dimensions of the plug gage GO and NO-GO elements are listed in Figure 6. The following procedure is recommended for inspecting the crimping chambers.

1. DISCONNECT AIR SUPPLY and remove adapter from tool holder. Refer to Section 3, ADAPTER INSTALLATION AND REMOVAL.

2. Remove oil and dirt from the jaw surfaces, jaw closure surfaces, and plug gage element surfaces.

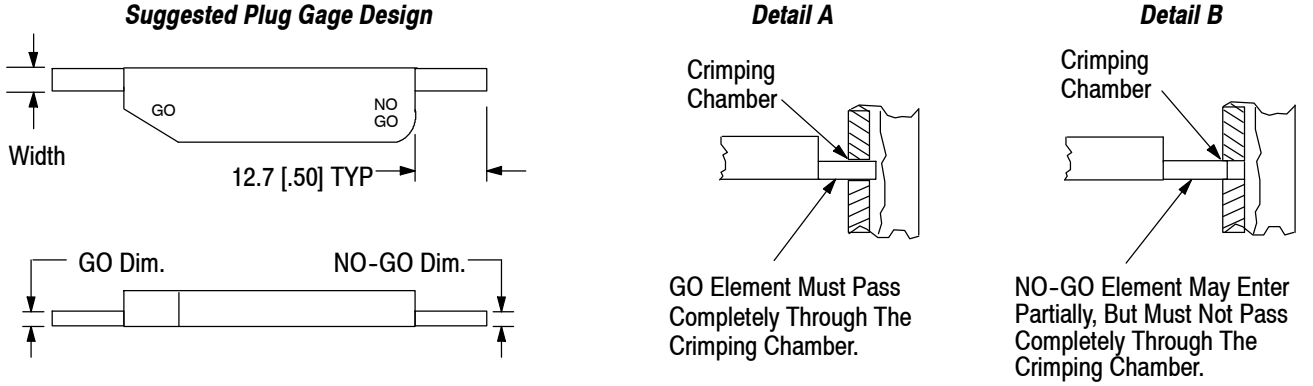

CRIMPING CHAMBER COLOR CODE	GAGE ELEMENT DIMENSIONS		
	GO	NO-GO	WIDTH (Max)
RED	1.981 - 1.988 [.0780 - .0783]	2.181 - 2.184 [.0859 - .0860]	4.69 [.185]
BLUE/GREEN	2.336 - 2.344 [.0920 - .0923]	2.537 - 2.540 [.0999 - .1000]	5.33 [.210]
YELLOW/BLACK	3.251 - 3.258 [.1280 - .1283]	3.451 - 3.454 [.1359 - .1360]	6.85 [.270]

Figure 6

3. Remove the two retaining rings from the link on the wire stop side. Remove the link. Take the wire stop spring off of the wire stop. Remove the wire stop. Replace the link. Squeeze the front half of both crimping jaws together until the jaws are bottomed. Measure the jaw closure area using the proper plug gage element as follows:

   a. Align the GO element with the crimping chamber. Push the GO element straight into the crimping chamber from the wire stop side of the crimping assembly without using force. The GO element must pass completely through the crimping chamber as shown in Figure 6, Detail A.

   b. Align the NO-GO element with the crimping chamber; then try to insert it straight into the crimping chamber. The NO-GO element may start entry but must not pass completely through, as shown in Figure 6, Detail B.

4. If the jaw closure meets the plug gage conditions, the crimping chambers may be considered dimensionally correct and should be reassembled and lubricated with a THIN coat of any high quality SAE 20 motor oil. If the crimping chambers do not conform to the plug gage conditions provided in Figure 6, contact your local Tyco Electronics Representative, or refer to Section 6, REPLACEMENT AND REPAIR.

For additional information about the use of a plug gage, see Instruction Sheet 408-7424.

6. REPLACEMENT AND REPAIR

Replaceable parts are listed in Figure 5. Parts other than those listed in Figure 5 should be replaced by Tyco Electronics to ensure quality and reliability of the tool. Order replacement parts through your Tyco Electronics Representative, or call 1-800-526-5142, or send a facsimile of your purchase order to 1-717-986-7605, or write to:

CUSTOMER SERVICE (38-35)
TYCO ELECTRONICS CORPORATION
P.O. BOX 3608
HARRISBURG, PA 17105-3608

For tool repair service, please contact a Tyco Electronics Representative at 1-800-526-5136.

7. REVISION SUMMARY

Since the previous release of this sheet, the following changes were made:

- Updated document to corporate requirements
- Added ORIGINAL INSTRUCTIONS