Transient Voltage Suppressors

30KPA Series

MERITEK

RoHS

UL E223045

FEATURES

- ✧ Plastic package.
- ✧ Glass passivated junction.
- ✧ 30,000W Peak Pulse Power capability on 10/1000μs waveform.
- ✧ Excellent clamping capability.
- ✧ Repetition rate (duty cycle): 0.05%.
- ✧ Low incremental surge resistance.
- ✧ Fast response time: typically less than 1.0ps from 0 volt to BV.
- ✧ High temperature soldering guaranteed: 265°C/10 seconds/.375", (9.5mm) lead length, 5lbs., (2.3kg) tension.



P600

MECHANICAL DATA

- ✧ Case: Molded plastic over glass passivated junction.
- ✧ Terminals: Plated Axial leads, solderable per MIL-STD-750, Method 2026.
- ✧ Polarity: Color band denotes cathode except Bipolar.
- ✧ Mounting Position: Any.
- ✧ Weight: 0.07 ounce, 2.3 grams.

DEVICES FOR BIPOLAR APPLICATION

For Bidirectional use C or CA suffix for type 30KPA30 through type 30KPA288 (e.g. 30KPA30C, 30KPA288CA); Electrical characteristics apply in both directions.

MAXIMUM RATINGS AND CHARACTERISTICS

Ratings at 25°C ambient temperature unless otherwise specified.

RATING	SYMBOL	VALUE	UNIT
Peak Pulse Power Dissipation on 10/1000μs waveform. (Note 1, Fig. 1)	P_{PPM}	Minimum 30,000	Watts
Peak Pulse Current on 10/1000 μs waveform. (Note 1, Fig. 3)	I_{PPM}	See Table	Amps
Steady State Power Dissipation at T_L =75°C , Lead length .375" (9.5mm). (Fig. 5)	$P_{M(AV)}$	8.0	Watts
Peak Forward Surge Current, 8.3ms Single Half Sine-Wave Superimposed on Rated Load. (JEDEC Method) (Note 2, Fig. 6)	I_{FSM}	400	Amps
Operating junction and Storage Temperature Range.	T_J , T_{STG}	-55 to +175	°C

Notes: 1. Non-repetitive current pulse, per Fig. 3 and derated above T_A = 25°C per Fig. 2.

2. 8.3ms single half sine-wave, or equivalent square wave, Duty cycle = 4 pulses per minute maximum.

RoHS

PACKAGE DIMENSIONS

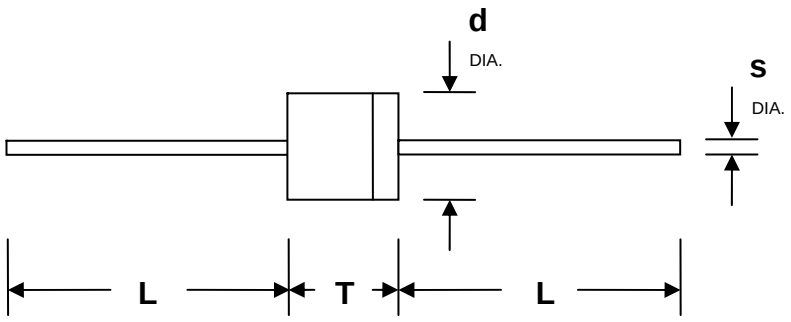

P600

Item	Millimeters		Inches	
	Min.	Max.	Min.	Max.
L	25.40	-	1.000	-
T	8.60	9.10	0.340	0.360
d	8.60	9.10	0.340	0.360
s	1.22	1.32	0.048	0.052

SPECIFICATIONS

Part Number		Reverse Stand-Off Voltage	Breakdown Voltage MIN.@I_T	Test Current	Maximum Clamping Voltage @I_{PP}	Peak Pulse Current	Reverse Leakage @ V_{RWM}
UNI-POLAR	BI-POLAR	V_{RWM}(V)	$V_{BR\ MIN}$ (V)	I_T(mA)	V_C(V)	I_{PP}(A)	I_R(μA)
30KPA28A	30KPA28CA	28.0	31.28	50	50.0	606.0	5000
30KPA30A	30KPA30CA	30.0	33.51	50	55.2	548.9	5000
30KPA33A	30KPA33CA	33.0	36.90	50	58.5	517.9	5000
30KPA36A	30KPA36CA	36.0	40.20	50	61.8	490.3	5000
30KPA39A	30KPA39CA	39.0	43.60	20	67.2	450.9	2000
30KPA42A	30KPA42CA	42.0	46.90	10	72.0	420.8	1000
30KPA43A	30KPA43CA	43.0	48.00	10	73.0	415.1	1000
30KPA45A	30KPA45CA	45.0	50.30	5	77.4	391.5	250
30KPA48A	30KPA48CA	48.0	53.60	5	81.6	371.3	150
30KPA51A	30KPA51CA	51.0	57.00	5	86.4	350.7	50
30KPA54A	30KPA54CA	54.0	60.30	5	91.4	331.5	20
30KPA58A	30KPA58CA	58.0	64.80	5	92.4	327.9	20

Part Number		Reverse Stand-Off Voltage	Breakdown Voltage MIN.@I_T	Test Current	Maximum Clamping Voltage @I_{PP}	Peak Pulse Current	Reverse Leakage @ V_{RWM}
UNI-POLAR	BI-POLAR	V_{RWM}(V)	$V_{BR\ MIN}$ (V)	I_T(mA)	V_C(V)	I_{PP}(A)	I_R(μA)
30KPA60A	30KPA60CA	60.0	67.00	5	102.0	297.1	15
30KPA64A	30KPA64CA	64.0	71.50	5	104.0	291.3	10
30KPA66A	30KPA66CA	66.0	73.70	5	107.0	283.2	2
30KPA70A	30KPA70CA	70.0	78.20	5	109.0	278.0	2
30KPA71A	30KPA71CA	71.0	79.30	5	111.5	271.7	2
30KPA72A	30KPA72CA	72.0	80.40	5	114.0	265.8	2
30KPA75A	30KPA75CA	75.0	83.80	5	119.4	253.8	2
30KPA78A	30KPA78CA	78.0	87.10	5	129.0	234.9	2
30KPA84A	30KPA84CA	84.0	93.80	5	139.2	217.7	2
30KPA90A	30KPA90CA	90.0	100.50	5	146.4	207.0	2
30KPA96A	30KPA96CA	96.0	107.20	5	156.0	194.2	2
30KPA102A	30KPA102CA	102.0	113.90	5	165.6	183.0	2
30KPA108A	30KPA108CA	108.0	120.60	5	175.2	172.9	2
30KPA120A	30KPA120CA	120.0	134.00	5	194.4	155.9	2
30KPA132A	30KPA132CA	132.0	147.40	5	213.0	142.3	2
30KPA144A	30KPA144CA	144.0	160.80	5	223.2	135.8	2
30KPA150A	30KPA150CA	150.0	167.60	5	233.4	129.8	2
30KPA156A	30KPA156CA	156.0	174.30	5	245.0	123.7	2
30KPA160A	30KPA160CA	160.0	178.70	5	252.6	120.0	2
30KPA168A	30KPA168CA	168.0	187.70	5	272.4	111.2	2
30KPA170A	30KPA170CA	170.0	189.90	5	275.0	110.2	2
30KPA180A	30KPA180CA	180.0	201.10	5	290.4	104.3	2
30KPA198A	30KPA198CA	198.0	221.20	5	319.8	94.7	2
30KPA216A	30KPA216CA	216.0	241.30	5	348.6	86.9	2
30KPA240A	30KPA240CA	240.0	268.10	5	387.0	78.3	2
30KPA258A	30KPA258CA	258.0	288.20	5	416.4	72.8	2
30KPA260A	30KPA260CA	260.0	290.40	5	416.0	72.8	2
30KPA270A	30KPA270CA	270.0	301.60	5	436.2	69.5	2
30KPA280A	30KPA280CA	280.0	312.80	5	464.0	65.3	2
30KPA288A	30KPA288CA	288.0	321.70	5	469.9	64.5	2

Note: For Bidirectional type having V_{RWM} of 10 volts and less, the I_R limit doubles.

RATING AND CHARACTERISTIC CURVES (TA: 25°C UNLESS OTHERWISE SPECIFIED)

Figure 1 - Peak Pulse Power Rating Curve

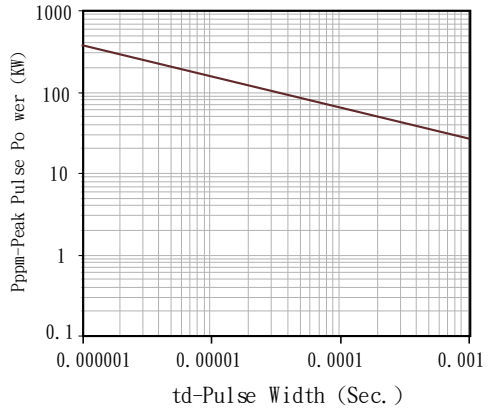

Figure 2 - Pulse Derating Curve

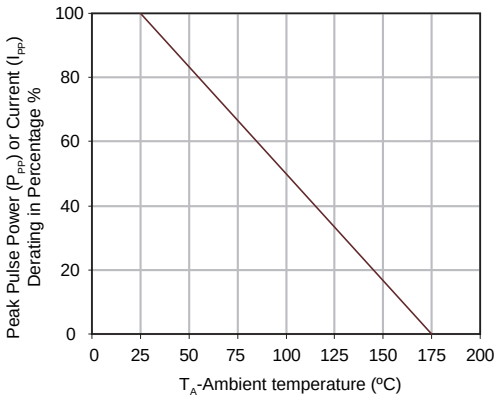

Figure 3 - Pulse Waveform

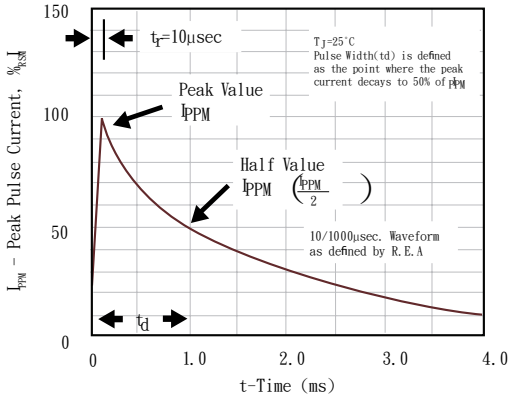

Figure 4 - Typical Junction Capacitance

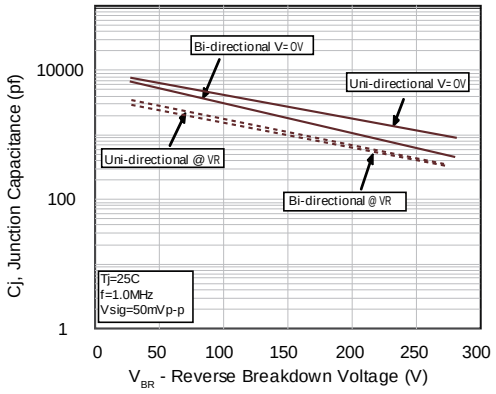

Figure 5 - Steady State Power Dissipation Derating Curve

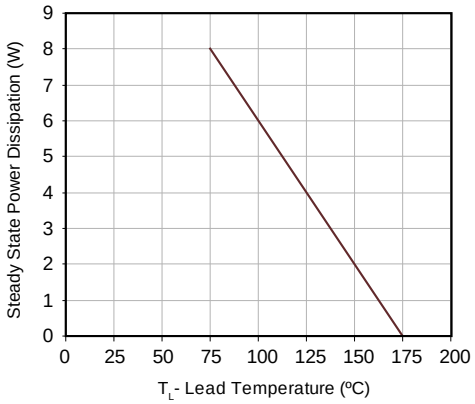

Figure 6 - Maximum Non-Repetitive Forward Surge Current Uni-Directional Only

