Hyperfast Rectifier, 30 A FRED Pt®



TO-247AC modified

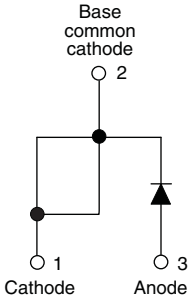

FEATURES

- Hyperfast recovery time
- Low forward voltage drop
- 175 °C operating junction temperature
- Low leakage current
- Single diode device
- Compliant to RoHS Directive 2002/95/EC
- Designed and qualified for industrial level

Pb-free

e3

RoHS COMPLIANT

DESCRIPTION/APPLICATIONS

State of the art hyperfast recovery rectifiers designed with optimized performance of forward voltage drop, hyperfast recovery time and soft recovery.

The planar structure and the platinum doped life time control guarantee the best overall performance, ruggedness and reliability characteristics.

These devices are intended for use in PFC boost stage in the AC/DC section of SMPS, inverters or as freewheeling diodes.

Their extremely optimized stored charge and low recovery current minimize the switching losses and reduce over dissipation in the switching element and snubbers.

PRODUCT SUMMARY	
Package	TO-247AC modified (2 pins)
$I_{F(AV)}$	30 A
V_R	600 V
V_F at I_F	2.6 V
t_{rr} typ.	See Recovery table
T_J max.	175 °C
Diode variation	Single die

ABSOLUTE MAXIMUM RATINGS				
PARAMETER	SYMBOL	TEST CONDITIONS	VALUES	UNITS
Peak repetitive reverse voltage	V_{RRM}		600	V
Average rectified forward current	$I_{F(AV)}$	T_C = 116 °C	30	A
Non-repetitive peak surge current	I_{FSM}	T_J = 25 °C	300	
Operating junction and storage temperatures	T_J, T_{Stg}		- 65 to 175	°C

ELECTRICAL SPECIFICATIONS (T_J = 25 °C unless otherwise specified)						
PARAMETER	SYMBOL	TEST CONDITIONS	MIN.	TYP.	MAX.	UNITS
Breakdown voltage, blocking voltage	V_{BR}, V_R	I_R = 100 µA	600	-	-	V
Forward voltage	V_F	I_F = 30 A	-	2.0	2.6	
		I_F = 30 A, T_J = 150 °C	-	1.34	1.75	
Reverse leakage current	I_R	V_R = V_R rated	-	0.3	50	µA
		T_J = 150 °C, V_R = V_R rated	-	60	500	
Junction capacitance	C_T	V_R = 600 V	-	33	-	pF
Series inductance	L_S	Measured lead to lead 5 mm from package body	-	3.5	-	nH

This document is subject to change without notice.
THE PRODUCTS DESCRIBED HEREIN AND THIS DOCUMENT ARE SUBJECT TO SPECIFIC DISCLAIMERS, SET FORTH AT www.vishay.com/doc?91000

DYNAMIC RECOVERY CHARACTERISTICS (T_J = 25 °C unless otherwise specified)							
PARAMETER	**SYMBOL**	**TEST CONDITIONS**		**MIN.**	**TYP.**	**MAX.**	**UNITS**
Reverse recovery time	t_{rr}	I_F = 1.0 A, dI_F/dt = 50 A/µs, V_R = 30 V		-	28	35	ns
		T_J = 25 °C	I_F = 30 A dI_F/dt = 200 A/µs V_R = 200 V	-	31	-	
		T_J = 125 °C		-	77	-	
Peak recovery current	I_{RRM}	T_J = 25 °C		-	3.5	-	A
		T_J = 125 °C		-	7.7	-	
Reverse recovery charge	Q_{rr}	T_J = 25 °C		-	65	-	nC
		T_J = 125 °C		-	345	-	

THERMAL - MECHANICAL SPECIFICATIONS						
PARAMETER	**SYMBOL**	**TEST CONDITIONS**	**MIN.**	**TYP.**	**MAX.**	**UNITS**
Maximum junction and storage temperature range	T_J, T_{Stg}		- 65	-	175	°C
Thermal resistance, junction to case per leg	R_{thJC}		-	0.5	0.9	°C/W
Thermal resistance, junction to ambient per leg	R_{thJA}	Typical socket mount	-	-	70	
Thermal resistance, case to heatsink	R_{thCS}	Mounting surface, flat, smooth and greased	-	0.4	-	
Weight			-	6.0	-	g
			-	0.22	-	oz.
Mounting torque			6.0 (5.0)	-	12 (10)	kgf · cm (lbf · in)
Marking device		Case style TO-247AC modified	30EPH06			

For technical questions within your region, please contact one of the following:
DiodesAmericas@vishay.com, DiodesAsia@vishay.com,

Document Number: 94018
Revision: 04-Apr-11

This document is subject to change without notice.
THE PRODUCTS DESCRIBED HEREIN AND THIS DOCUMENT ARE SUBJECT TO SPECIFIC DISCLAIMERS, SET FORTH AT www.vishay.com/doc?91000

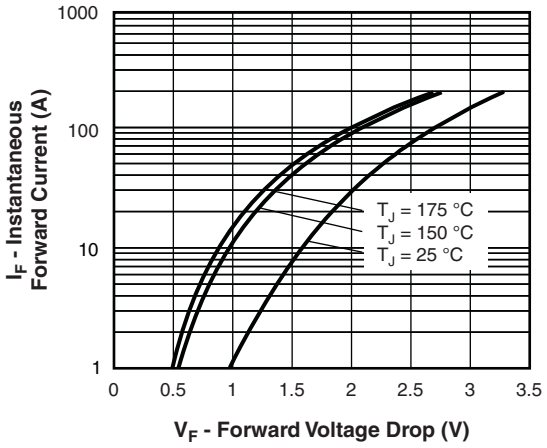

Fig. 1 - Typical Forward Voltage Drop Characteristics

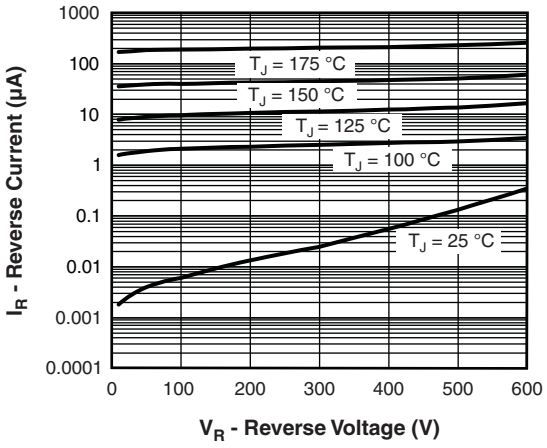

Fig. 2 - Typical Values of Reverse Current vs. Reverse Voltage

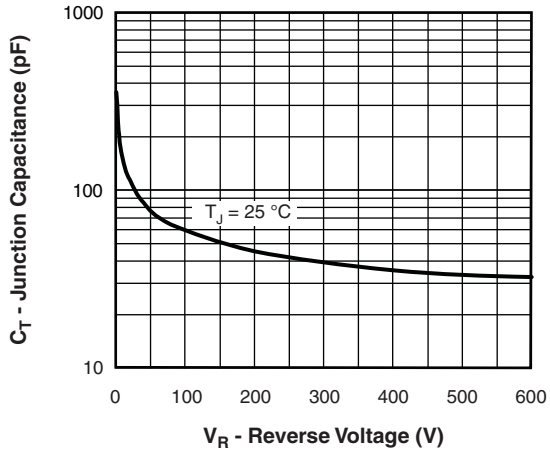

Fig. 3 - Typical Junction Capacitance vs. Reverse Voltage

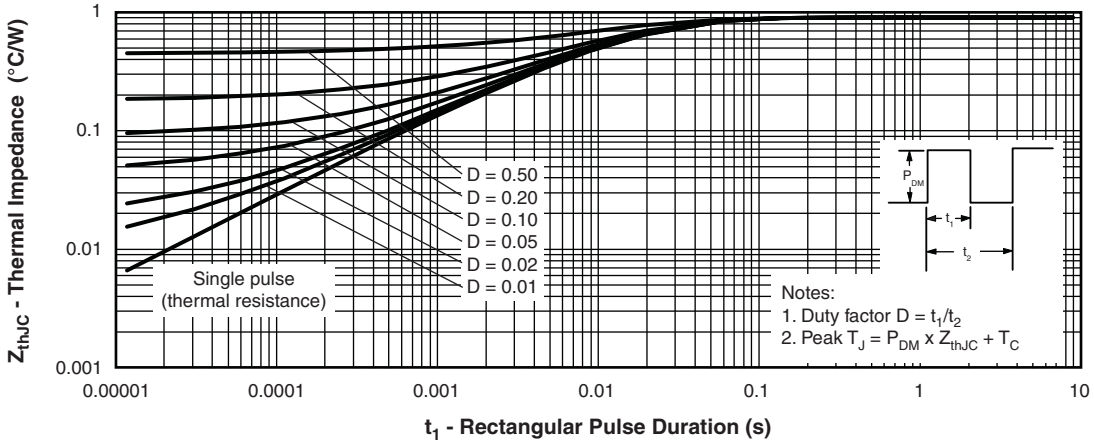

Fig. 4 - Maximum Thermal Impedance Z_{thJC} Characteristics

This document is subject to change without notice.
THE PRODUCTS DESCRIBED HEREIN AND THIS DOCUMENT ARE SUBJECT TO SPECIFIC DISCLAIMERS, SET FORTH AT www.vishay.com/doc?91000

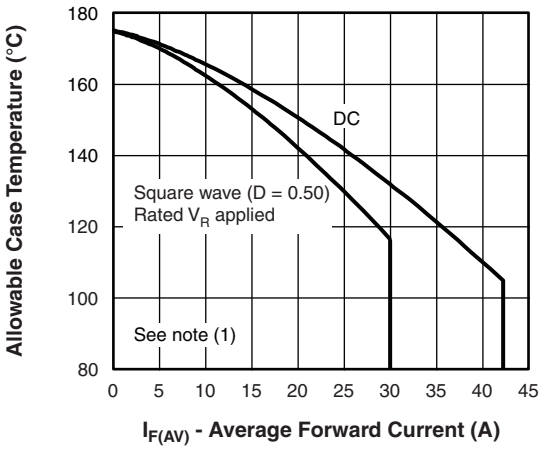

Fig. 5 - Maximum Allowable Case Temperature vs. Average Forward Current

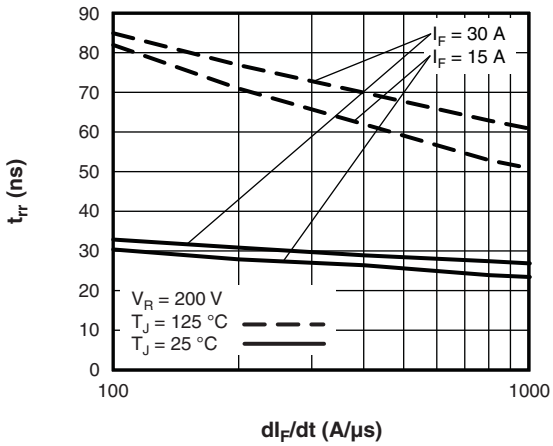

Fig. 7 - Typical Reverse Recovery Time vs. dI_F/dt

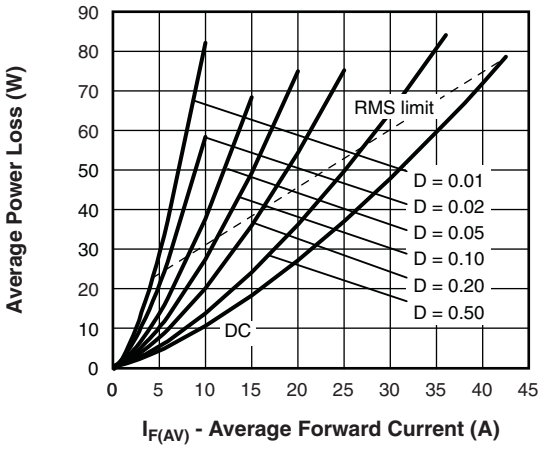

Fig. 6 - Forward Power Loss Characteristics

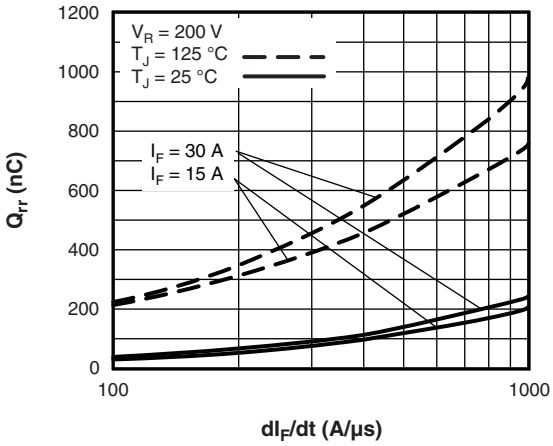

Fig. 8 - Typical Stored Charge vs. dI_F/dt

Note

(1) Formula used: $T_C = T_J - (Pd + Pd_{REV}) \times R_{thJC}$;
Pd = Forward power loss = $I_{F(AV)} \times V_{FM}$ at ($I_{F(AV)}$/D) (see fig. 6);
Pd_{REV} = Inverse power loss = $V_{R1} \times I_R$ (1 - D); I_R at V_{R1} = Rated V_R

For technical questions within your region, please contact one of the following:
DiodesAmericas@vishay.com, DiodesAsia@vishay.com,

Document Number: 94018
Revision: 04-Apr-11

This document is subject to change without notice.
THE PRODUCTS DESCRIBED HEREIN AND THIS DOCUMENT ARE SUBJECT TO SPECIFIC DISCLAIMERS, SET FORTH AT www.vishay.com/doc?91000

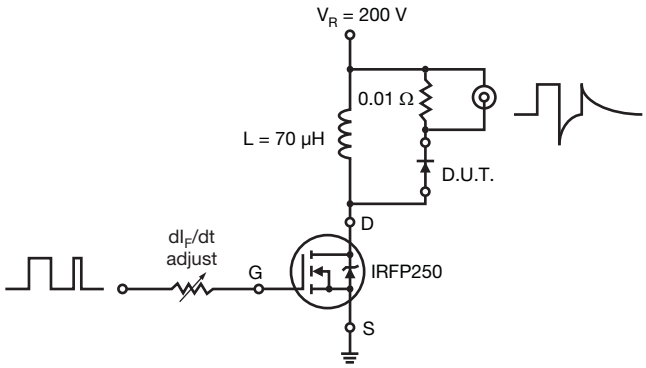

Fig. 9 - Reverse Recovery Parameter Test Circuit

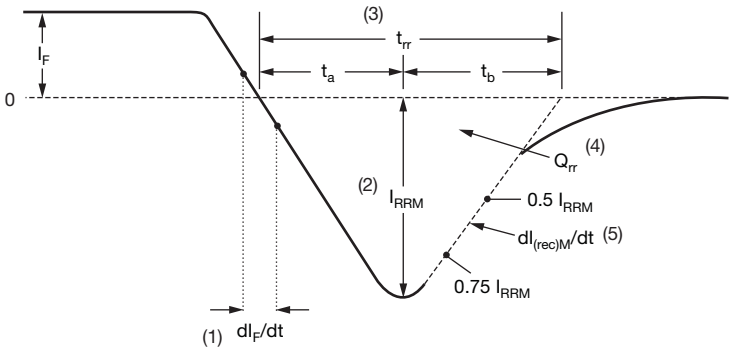

(1) dI_F/dt - rate of change of current through zero crossing

(2) I_{RRM} - peak reverse recovery current

(3) t_{rr} - reverse recovery time measured from zero crossing point of negative going I_F to point where a line passing through 0.75 I_{RRM} and 0.50 I_{RRM} extrapolated to zero current.

(4) Q_{rr} - area under curve defined by t_{rr} and I_{RRM}

$$Q_{rr} = \frac{t_{rr} \times I_{RRM}}{2}$$

(5) $dI_{(rec)M}/dt$ - peak rate of change of current during t_b portion of t_{rr}

Fig. 10 - Reverse Recovery Waveform and Definitions

This document is subject to change without notice.
THE PRODUCTS DESCRIBED HEREIN AND THIS DOCUMENT ARE SUBJECT TO SPECIFIC DISCLAIMERS, SET FORTH AT www.vishay.com/doc?91000

ORDERING INFORMATION TABLE

Device code

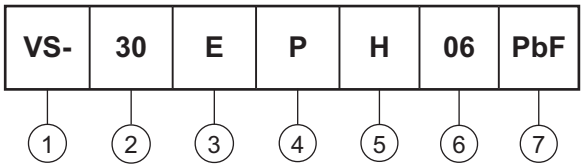

1 - Vishay Semiconductors product
2 - Current rating (30 = 30 A)
3 - Circuit configuration:
E = Single diode
4 - Package:
P = TO-247AC modified
5 - H = Hyperfast recovery
6 - Voltage rating (06 = 600 V)
7 - PbF = Lead (Pb)-free

Tube standard pack quantity: 25 pieces

LINKS TO RELATED DOCUMENTS	
Dimensions	www.vishay.com/doc?95253
Part marking information	www.vishay.com/doc?95255

For technical questions within your region, please contact one of the following:
DiodesAmericas@vishay.com, DiodesAsia@vishay.com,
Document Number: 94018
Revision: 04-Apr-11
This document is subject to change without notice.
THE PRODUCTS DESCRIBED HEREIN AND THIS DOCUMENT ARE SUBJECT TO SPECIFIC DISCLAIMERS, SET FORTH AT www.vishay.com/doc?91000

DIMENSIONS in millimeters and inches

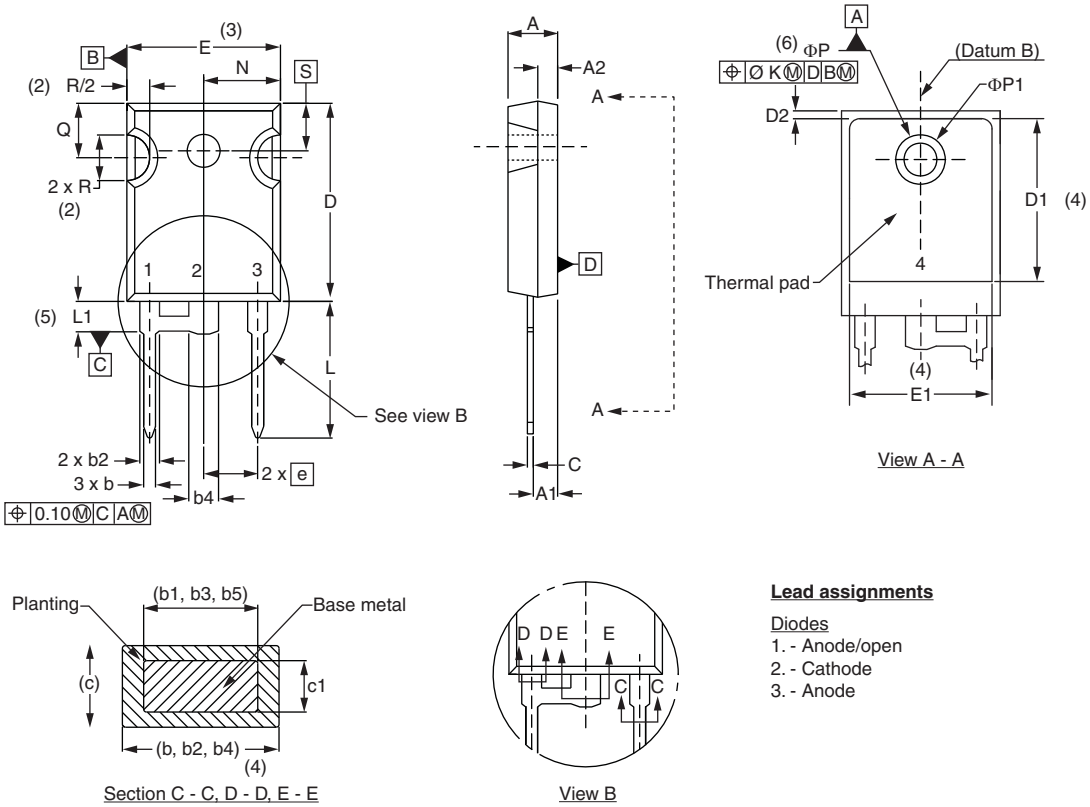

Lead assignments

Diodes
1. - Anode/open
2. - Cathode
3. - Anode

SYMBOL	MILLIMETERS		INCHES		NOTES
	MIN.	MAX.	MIN.	MAX.	
A	4.65	5.31	0.183	0.209	
A1	2.21	2.59	0.087	0.102	
A2	1.50	2.49	0.059	0.098	
b	0.99	1.40	0.039	0.055	
b1	0.99	1.35	0.039	0.053	
b2	1.65	2.39	0.065	0.094	
b3	1.65	2.37	0.065	0.094	
b4	2.59	3.43	0.102	0.135	
b5	2.59	3.38	0.102	0.133	
c	0.38	0.86	0.015	0.034	
c1	0.38	0.76	0.015	0.030	
D	19.71	20.70	0.776	0.815	3
D1	13.08	-	0.515	-	4

SYMBOL	MILLIMETERS		INCHES		NOTES
	MIN.	MAX.	MIN.	MAX.	
D2	0.51	1.30	0.020	0.051	
E	15.29	15.87	0.602	0.625	3
E1	13.72	-	0.540	-	
e	5.46 BSC		0.215 BSC		
ΦK	2.54		0.010		
L	14.20	16.10	0.559	0.634	
L1	3.71	4.29	0.146	0.169	
N	7.62 BSC		0.3		
ΦP	3.56	3.66	0.14	0.144	
ΦP1	-	6.98	-	0.275	
Q	5.31	5.69	0.209	0.224	
R	4.52	5.49	1.78	0.216	
S	5.51 BSC		0.217 BSC		

Notes

(1) Dimensioning and tolerance per ASME Y14.5M-1994

(2) Contour of slot optional

(3) Dimension D and E do not include mold flash. Mold flash shall not exceed 0.127 mm (0.005") per side. These dimensions are measured at the outermost extremes of the plastic body

(4) Thermal pad contour optional with dimensions D1 and E1

(5) Lead finish uncontrolled in L1

(6) ΦP to have a maximum draft angle of 1.5 to the top of the part with a maximum hole diameter of 3.91 mm (0.154")

(7) Outline conforms to JEDEC outline TO-247 with exception of dimension c

For technical questions within your region: DiodesAmericas@vishay.com, DiodesAsia@vishay.com, DiodesEurope@vishay.com

THIS DOCUMENT IS SUBJECT TO CHANGE WITHOUT NOTICE. THE PRODUCTS DESCRIBED HEREIN AND THIS DOCUMENT ARE SUBJECT TO SPECIFIC DISCLAIMERS, SET FORTH AT www.vishay.com/doc?91000

Disclaimer

ALL PRODUCT, PRODUCT SPECIFICATIONS AND DATA ARE SUBJECT TO CHANGE WITHOUT NOTICE TO IMPROVE RELIABILITY, FUNCTION OR DESIGN OR OTHERWISE.

Vishay Intertechnology, Inc., its affiliates, agents, and employees, and all persons acting on its or their behalf (collectively, “Vishay”), disclaim any and all liability for any errors, inaccuracies or incompleteness contained in any datasheet or in any other disclosure relating to any product.

Vishay makes no warranty, representation or guarantee regarding the suitability of the products for any particular purpose or the continuing production of any product. To the maximum extent permitted by applicable law, Vishay disclaims (i) any and all liability arising out of the application or use of any product, (ii) any and all liability, including without limitation special, consequential or incidental damages, and (iii) any and all implied warranties, including warranties of fitness for particular purpose, non-infringement and merchantability.

Statements regarding the suitability of products for certain types of applications are based on Vishay’s knowledge of typical requirements that are often placed on Vishay products in generic applications. Such statements are not binding statements about the suitability of products for a particular application. It is the customer’s responsibility to validate that a particular product with the properties described in the product specification is suitable for use in a particular application. Parameters provided in datasheets and/or specifications may vary in different applications and performance may vary over time. All operating parameters, including typical parameters, must be validated for each customer application by the customer’s technical experts. Product specifications do not expand or otherwise modify Vishay’s terms and conditions of purchase, including but not limited to the warranty expressed therein.

Except as expressly indicated in writing, Vishay products are not designed for use in medical, life-saving, or life-sustaining applications or for any other application in which the failure of the Vishay product could result in personal injury or death. Customers using or selling Vishay products not expressly indicated for use in such applications do so at their own risk and agree to fully indemnify and hold Vishay and its distributors harmless from and against any and all claims, liabilities, expenses and damages arising or resulting in connection with such use or sale, including attorneys fees, even if such claim alleges that Vishay or its distributor was negligent regarding the design or manufacture of the part. Please contact authorized Vishay personnel to obtain written terms and conditions regarding products designed for such applications.

No license, express or implied, by estoppel or otherwise, to any intellectual property rights is granted by this document or by any conduct of Vishay. Product names and markings noted herein may be trademarks of their respective owners.