Panel feed-through terminal block - UW 10

3073322

https://www.phoenixcontact.com/us/products/3073322

Please be informed that the data shown in this PDF document is generated from our Online Catalog. Please find the complete data in the user documentation. Our General Terms of Use for Downloads are valid.



Panel feed-through terminal block, connection method: Screw connection with tension sleeve, Screw connection with tension sleeve, number of positions: 1, load current: 57 A, cross section: 0.5 mm^2 - 16 mm^2, connection direction of the conductor to plug-in direction: 0 °, width: 10.1 mm, color: gray

Your advantages

- Well-known connection principle allows worldwide use
- Low temperature rise, thanks to maximum contact force
- Tool-free snap-in principle enables easy mounting on the device panel
- Automatic panel thickness compensation enables universal use

Commercial Data

Item number	3073322
Packing unit	1 pc
Minimum order quantity	50 pc
Sales Key	A02
Product Key	AA1CDA
Catalog Page	Page 610 (C-1-2013)
GTIN	4046356344579
Weight per Piece (including packing)	21.967 g
Weight per Piece (excluding packing)	18.5 g
Customs tariff number	85369010
Country of origin	CN

Technical Data

Product properties

Product type	Panel feed-through terminal block
Number of positions	1
Pitch	10.1 mm
Number of connections	2
Number of rows	1
Number of potentials	1

Insulation characteristics

Overvoltage category	III
Degree of pollution	3

Electrical properties

Nominal current I_N	57 A
Nominal voltage U_N	500 V
Pollution degree	3
Rated voltage (III/3)	500 V
Rated surge voltage (III/3)	6 kV

Connection data

Connection technology

Connector system	UW 10
Nominal cross section	10 mm²

Conductor connection exterior

Connection method	Screw connection with tension sleeve
Connection direction of the conductor to plug-in direction	0 °
Conductor cross section solid	0.5 mm² ... 16 mm²
Conductor cross section flexible	0.5 mm² ... 10 mm²
Conductor cross section flexible, with ferrule without plastic sleeve	0.5 mm² ... 10 mm²
Conductor cross section, flexible, with ferrule, with plastic sleeve	0.5 mm² ... 10 mm²
2 conductors with same cross section, solid	0.5 mm² ... 4 mm²
2 conductors with same cross section, flexible	0.5 mm² ... 4 mm²
2 conductors with same cross section, flexible, with ferrule without plastic sleeve	0.5 mm² ... 2.5 mm²
2 conductors with the same cross section, flexible, with TWIN ferrule with plastic sleeve	0.5 mm² ... 6 mm²
Internal cylindrical gage	B6
Stripping length	11 mm
Torque	1.5 Nm ... 1.8 Nm

Conductor connection interior

Connection method	Screw connection with tension sleeve
Connection direction of the conductor to plug-in direction	0 °
Conductor cross section solid	0.5 mm² ... 16 mm²
Conductor cross section flexible	0.5 mm² ... 10 mm²
Conductor cross section flexible, with ferrule without plastic sleeve	0.5 mm² ... 10 mm²
Conductor cross section, flexible, with ferrule, with plastic sleeve	0.5 mm² ... 10 mm²
2 conductors with same cross section, solid	0.5 mm² ... 4 mm²
2 conductors with same cross section, flexible	0.5 mm² ... 4 mm²
2 conductors with same cross section, flexible, with ferrule without plastic sleeve	0.5 mm² ... 2.5 mm²
2 conductors with the same cross section, flexible, with TWIN ferrule with plastic sleeve	0.5 mm² ... 6 mm²
Internal cylindrical gage	B6
Stripping length	11 mm
Torque	1.5 Nm ... 1.8 Nm

Mounting

Plate thickness	1 mm ... 4 mm

Material specifications

Material data - contact

Note	WEEE/RoHS-compliant, free of whiskers according to IEC 60068-2-82/JEDEC JESD 201
Contact material	Cu alloy
Surface characteristics	tin-plated

Material data - housing

Housing color	gray (7042)
Insulating material	PA
Insulating material group	I
CTI according to IEC 60112	600
Flammability rating according to UL 94	V0
Glow wire flammability index GWFI according to EN 60695-2-12	850
Glow wire ignition temperature GWIT according to EN 60695-2-13	775
Temperature for the ball pressure test according to EN 60695-10-2	125 °C

Notes

Safety note

Safety note	• Only electrically qualified personnel may install and operate the product. To recognize and prevent danger, the qualified personnel must be familiar with the basics of electrical engineering.
	• Observe the technical data provided here and refer to the documents listed under “Downloads”. The download area

	contains important information, such as installation notes, technical drawings, and 3D data.
	• The cable entry funnel is not safe to touch. Never connect or disconnect the terminal when it is energized. Take appropriate steps to ensure touch protection.

Dimensions

Dimensional drawing	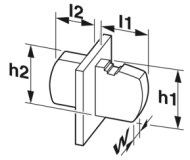
Pitch	10.1 mm
Width [w]	10.1 mm

External dimensions

Width [w]	10.1 mm
Height [h1]	31 mm
Length [l1]	29 mm

Internal dimensions

Width [w]	10.1 mm
Height [h2]	29 mm
Length [l2]	23.5 mm

Mechanical tests

Test for conductor damage and slackening

Specification	IEC 60947-7-1:2009-04
Result	Test passed

Pull-out test

Specification	IEC 60947-7-1:2009-04
Conductor cross section/conductor type/tractive force setpoint/actual value	0.5 mm² / solid / > 20 N
	0.5 mm² / flexible / > 20 N
	16 mm² / stranded / > 100 N
	10 mm² / flexible / > 90 N

Electrical tests

Temperature-rise test

Specification	IEC 60947-7-1:2009-04
Requirement temperature-rise test	Increase in temperature ≤ 45 K

Short-time withstand current

Specification	IEC 60947-7-1:2009-04

Air clearances and creepage distances | 1. Insulation coordination

Specification	IEC 60947-7-1:2009-04
Insulating material group	I
Comparative tracking index (IEC 60112)	CTI 600
Rated insulation voltage (III/3)	500 V
Rated surge voltage (III/3)	6 kV
minimum clearance value - non-homogenous field (III/3)	5.5 mm
minimum creepage distance (III/3)	6.3 mm

Environmental and real-life conditions

Glow-wire test

Specification	IEC 60695-2-11:2000-10
Temperature	960 °C
Time of exposure	30 s

Ambient conditions

Ambient temperature (operation)	-40 °C ... 100 °C (Depending on the current carrying capacity/derating curve)
Ambient temperature (storage/transport)	-40 °C ... 70 °C
Relative humidity (storage/transport)	30 % ... 70 %
Ambient temperature (assembly)	-5 °C ... 100 °C

Packaging specifications

Type of packaging	packed in cardboard

Drawings

Diagram

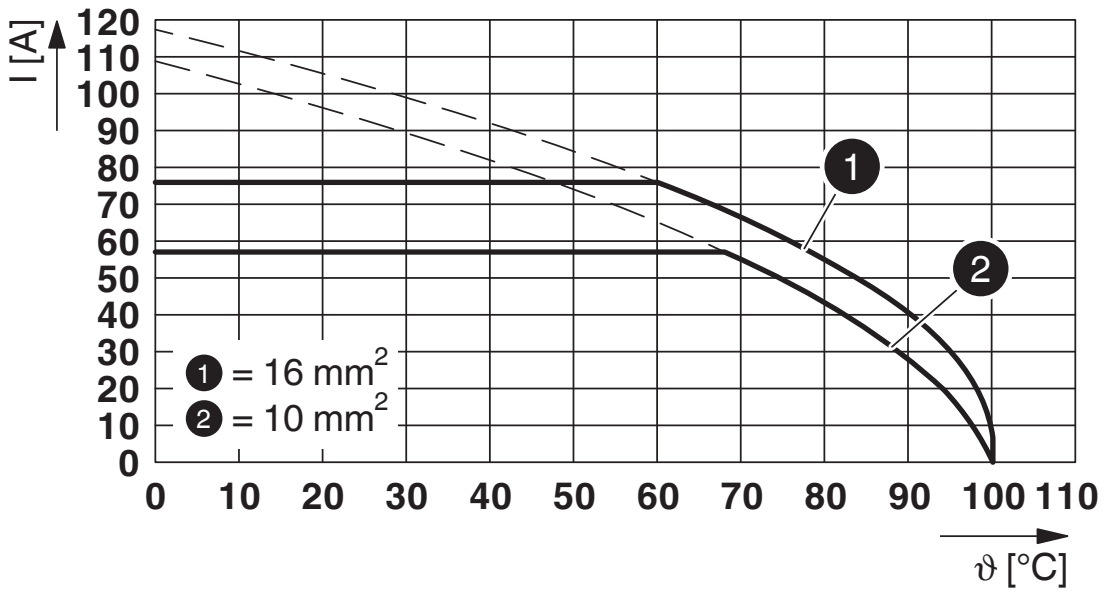

Type: UW 10

Dimensional drawing

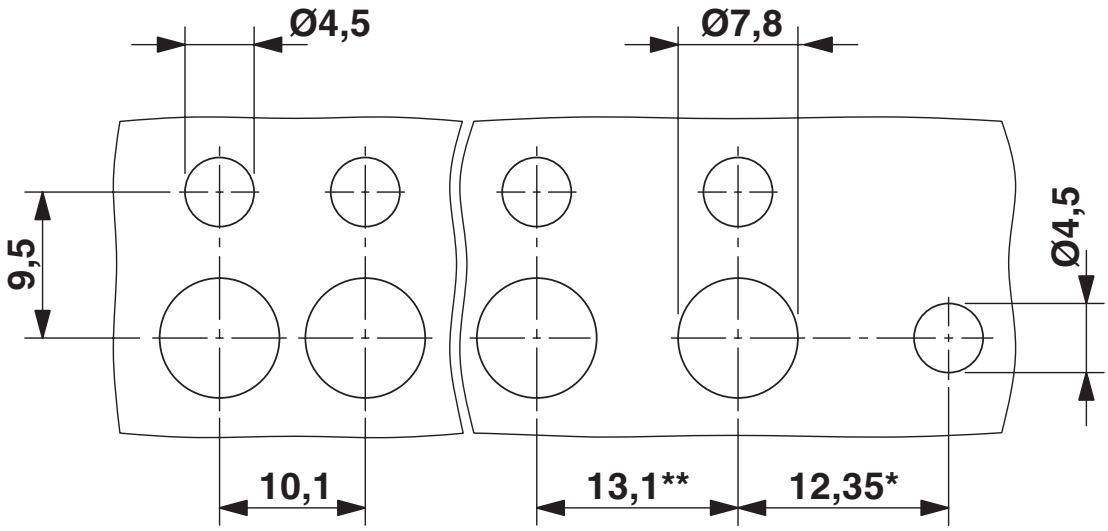

* Only when using the UW...-F flange plate

** Dimensions when using the DP-UW... spacer plate

Dimensional drawing

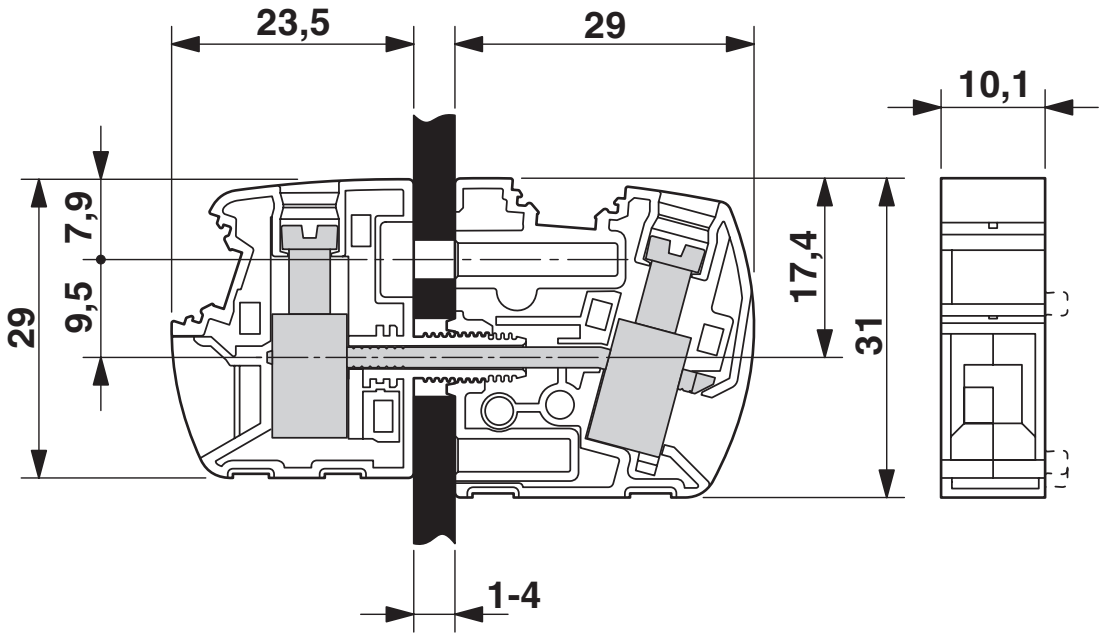

Approvals

CSA
Approval ID: 2618381-158887

	Nominal Voltage U_N	Nominal Current I_N	Cross Section AWG	Cross Section mm^2
Use group B				
	300 V	65 A	20 - 6	-
Use group C				
	300 V	65 A	20 - 6	-
Use group D				
	600 V	65 A	20 - 6	-

EAC
Approval ID: B.01687

cULus Recognized
Approval ID: E60425-20100423

	Nominal Voltage U_N	Nominal Current I_N	Cross Section AWG	Cross Section mm^2
Use group B				
	300 V	65 A	20 - 6	-
Use group C				
	300 V	65 A	20 - 6	-
Use group D				
	600 V	5 A	20 - 6	-

Classifications

ECLASS

ECLASS-9.0	27141134
ECLASS-10.0.1	27141134
ECLASS-11.0	27141134

ETIM

ETIM 8.0	EC001283

UNSPSC

UNSPSC 21.0	39121400

Environmental Product Compliance

China RoHS	Environmentally friendly use period: unlimited = EFUP-e
	No hazardous substances above threshold values

Accessories

Note: Applying some accessories below might limit this product.

Insertion bridge

Insertion bridge - EB 2-10 - 0203153

https://www.phoenixcontact.com/us/products/0203153

Insertion bridge, pitch: 10 mm, color: gray



Max. current carrying capacity: 70 A

Insertion bridge

Insertion bridge - EB 3-10 - 0203328

https://www.phoenixcontact.com/us/products/0203328

Insertion bridge, pitch: 10 mm, color: gray

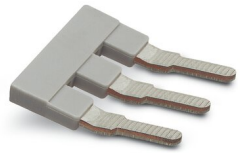

Max. current carrying capacity: 70 A

Insertion bridge

Insertion bridge - EB 10-10 - 0203137

https://www.phoenixcontact.com/us/products/0203137

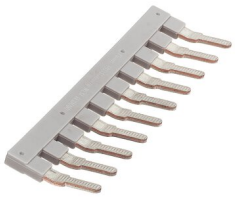

Insertion bridge, pitch: 10 mm, color: gray

Max. current carrying capacity: 70 A

Zack marker strip

Zack marker strip - ZB 10:UNBEDRUCKT - 1053001

https://www.phoenixcontact.com/us/products/1053001

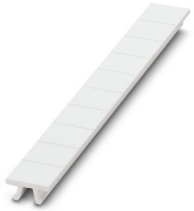

Zack marker strip, Strip, white, unlabeled, can be labeled with: PLOTMARK, CMS-P1-PLOTTER, mounting type: snapped, for terminal block width: 10.2 mm, lettering field size: 10.5 mm x 10.15 mm, Number of individual labels: 10

Zack Marker strip, flat

Zack Marker strip, flat - ZBF10:UNBEDRUCKT - 0809997

https://www.phoenixcontact.com/us/products/0809997



Zack Marker strip, flat, Strip, white, unlabeled, can be labeled with: CMS-P1-PLOTTER, PLOTMARK, mounting type: snapped, for terminal block width: 10 mm, lettering field size: 5.15 x 10 mm, Number of individual labels: 10

Marker for terminal blocks

Marker for terminal blocks - UC-TM 10 - 0818069

https://www.phoenixcontact.com/us/products/0818069



Marker for terminal blocks, Sheet, white, unlabeled, can be labeled with: BLUEMARK ID COLOR, BLUEMARK ID, BLUEMARK CLED, PLOTMARK, CMS-P1-PLOTTER, mounting type: snapped, for terminal block width: 10.2 mm, lettering field size: 9.6 x 10.5 mm, Number of individual labels: 48

Marker for terminal blocks

Marker for terminal blocks - UC-TMF 10 - 0818124

https://www.phoenixcontact.com/us/products/0818124



Marker for terminal blocks, Sheet, white, unlabeled, can be labeled with: BLUEMARK ID COLOR, BLUEMARK ID, BLUEMARK CLED, PLOTMARK, CMS-P1-PLOTTER, mounting type: snapped, for terminal block width: 10.2 mm, lettering field size: 9.6 x 5.1 mm, Number of individual labels: 48

Marker for terminal blocks

Marker for terminal blocks - TMT 10 R - 0816210

https://www.phoenixcontact.com/us/products/0816210



Marker for terminal blocks, Roll, white, unlabeled, can be labeled with: THERMOMARK ROLL 2.0, THERMOMARK ROLL, THERMOMARK ROLL X1, THERMOMARK ROLLMASTER 300/600, THERMOMARK X1.2, THERMOMARK S1.1, perforated, mounting type: snapped, snap into flat marker groove, for terminal block width: 10.2 mm, lettering field size: 6.35 x 10.15 mm, Number of individual labels: 10000

Marker for terminal blocks

Marker for terminal blocks - TMT (EX9,5)R - 0828295

https://www.phoenixcontact.com/us/products/0828295



Marker for terminal blocks, Roll, white, unlabeled, can be labeled with: THERMOMARK ROLL 2.0, THERMOMARK ROLL, THERMOMARK ROLL X1, THERMOMARK ROLLMASTER 300/600, THERMOMARK X1.2, mounting type: snapped, snap into tall marker groove, for terminal block width: 50000 mm, lettering field size: 9.5 x 50000 mm, Number of individual labels: 1

Screwdriver

Screwdriver - SZS 1,0X4,0 VDE - 1205066

https://www.phoenixcontact.com/us/products/1205066



Screwdriver, slot-headed, VDE insulated, size: 1.0 x 4.0 x 100 mm, 2-component grip, with non-slip grip

Phoenix Contact 2022 © - all rights reserved
https://www.phoenixcontact.com

Phoenix Contact USA
586 Fulling Mill Road
Middletown, PA 17057, United States
(+717) 944-1300
info@phoenixcon.com