molex
one company > a world of innovation

This document was generated on 05/24/2010

PLEASE CHECK WWW.MOLEX.COM FOR LATEST PART INFORMATION

Part Number: 0307005080
Status: Active
Overview: hdac_64_dualrow_high_density_automotive_connectors
Description: 2.54mm (.100") Pitch, 0.64mm (.025") Width H-DAC 64™ High Density Automotive Header, Dual Row, Right Angle 8 Circuits

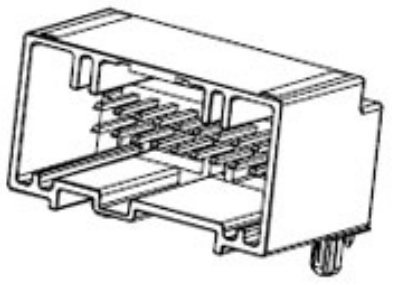

Series image - Reference only

Documents:

Test Summary (PDF)
3D Model
Drawing (PDF)
Application Specification (PDF)
Product Specification PS-30700-0001 (PDF)
RoHS Certificate of Compliance (PDF)

General

Product Family	PCB Headers
Series	30700
Application	Board-to-Board
Comments	Polarization Option 1
Overview	hdac_64_dualrow_high_density_automotive_connectors
Product Literature Order No	USA-287
Product Name	H-DAC 64™

Physical

Breakaway	No
Circuits (Loaded)	8
Circuits (maximum)	8
Color - Resin	Gray
Durability (mating cycles max)	25
First Mate / Last Break	No
Glow-Wire Compliant	No
Guide to Mating Part	No
Keying to Mating Part	None
Lock to Mating Part	Yes
Material - Metal	Brass
Material - Plating Mating	Tin
Material - Plating Termination	Tin
Material - Resin	Modified Polystyrene
Number of Rows	2
Orientation	Right Angle
PC Tail Length (in)	0.145 In
PC Tail Length (mm)	3.69 mm
PCB Locator	Yes
PCB Retention	Yes
PCB Thickness Recommended (in)	0.061 In
PCB Thickness Recommended (mm)	1.57 mm
Packaging Type	Tray
Pitch - Mating Interface (in)	0.100 In
Pitch - Mating Interface (mm)	2.54 mm
Polarized to Mating Part	Yes
Polarized to PCB	Yes
Shrouded	Fully
Stackable	No
Surface Mount Compatible (SMC)	No
Temperature Range - Operating	-40°C to +105°C
Termination Interface: Style	Through Hole

Electrical

Current - Maximum per Contact	7A

EU RoHS
ELV and RoHS Compliant
REACH SVHC
Contains SVHC: No
Halogen-Free Status
Halogen-Free

China RoHS

Need more information on product environmental compliance?

Email productcompliance@molex.com
For a multiple part number RoHS Certificate of Compliance, click here

Please visit the Contact Us section for any non-product compliance questions.

Search Parts in this Series
30700Series

Mates With
307001 H-DAC 64™ High Density Crimp Housing

Voltage - Maximum	250V

Solder Process Data

Duration at Max. Process Temperature (seconds)	40
Lead-free Process Capability	SMC & Wave Capable (TH only)
Max. Cycles at Max. Process Temperature	3
Process Temperature max. C	260

Material Info

Reference - Drawing Numbers

Packaging Specification	PK-30907-260
Product Specification	PS-30700-0001
Sales Drawing	SD-30700-520

This document was generated on 05/24/2010

PLEASE CHECK WWW.MOLEX.COM FOR LATEST PART INFORMATION

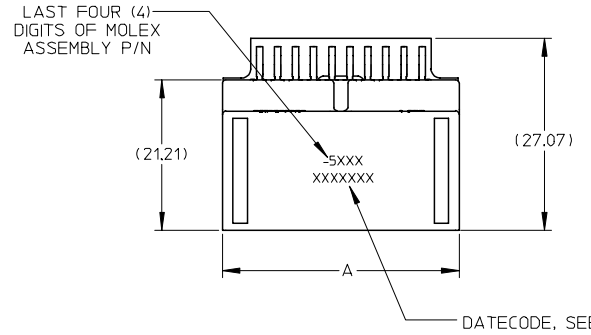

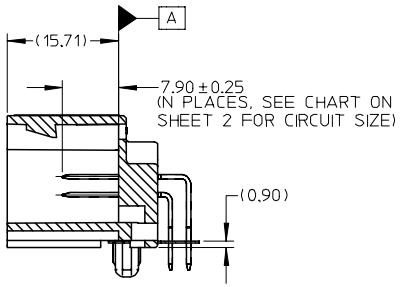

SECTION Z-Z

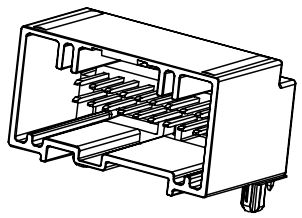

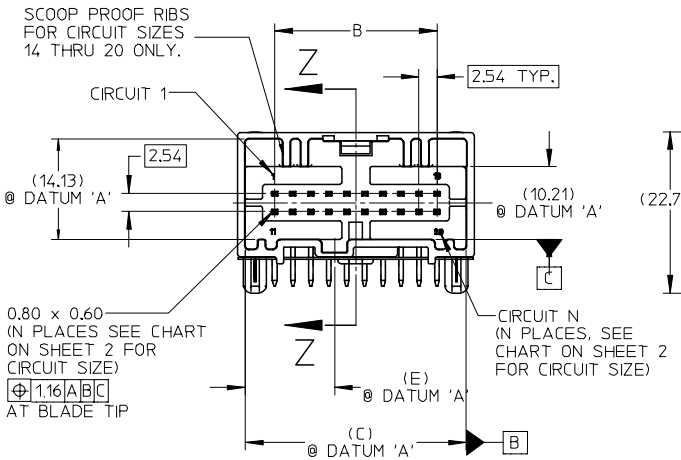

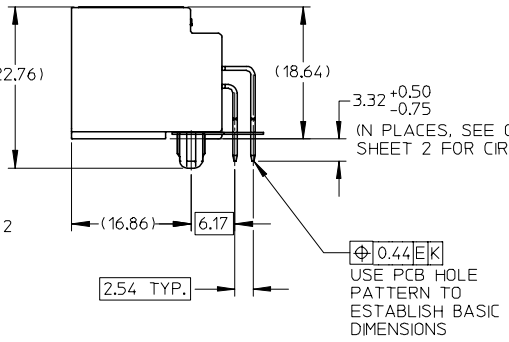

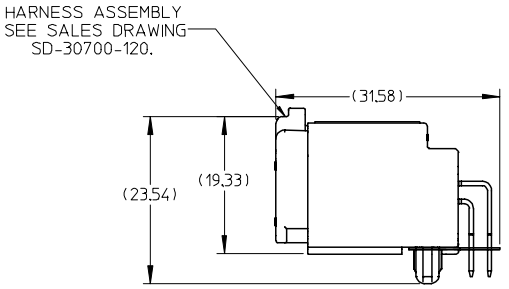

MATED VIEW

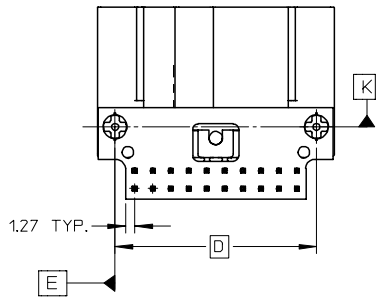

20 CIRCUIT RIGHT ANGLE HEADER ASSEMBLY SHOWN

NOTES:

1. MATERIAL: HOUSING: SPS, GLASS FILLED, COLOR: SEE CHART.
   TERMINAL: COPPER ALLOY.
   PIN ALIGNMENT PLATE: MYLAR, COLOR: NATURAL (WHITE).
2. FINISHES: TERMINAL: TIN (Sn) OVERALL;
   THICKNESS = 1.5 MICROMETER MINIMUM;
   NICKEL (Ni) UNDERPLATE OVERALL.
3. PRODUCT SPECIFICATION: PS-30700-0001
4. PACKAGING SPECIFICATION : PK-30907-227.
5. MATES WITH: SERIES 30700, SEE SALES DRAWING SD-30700-120.
6. DATECODE DESCRIPTION:
   - 1ST DIGIT: MACHINE ID# (ALWAYS WILL BE "2")
   - 2ND THROUGH 4TH DIGIT: DAY# OF THE CALENDAR YEAR (EXAMPLE: FEB. 3RD = "034)
   - 5TH DIGIT: LAST DIGIT OF THE CALENDAR YEAR (EXAMPLE: 1999 = "9")
   - 6TH THROUGH 7TH DIGIT: HOUR OF THE DAY.
7. RECOMMENDED OPTIONAL SCREW: M2 x 0.89, 6mm IN LENGTH, PAN COLLAR HEAD, 6 LOBE.
   TORQUE: 7 NEWTON CENTIMETERS

SEE ECN# UAU2001-0258
EC NO: UAU2007-0542 2007/03/06
DRWN:BDICK01 2007/03/06
CHKD:
APPR: SMARCEAU 2007/03/07
DESCRIPTION
REV
B1

QUALITY SYMBOLS
▼ = 0
▽ = 0

GENERAL TOLERANCES (UNLESS SPECIFIED)

	mm	INCH
4 PLACES	±	±
3 PLACES	±	±
2 PLACES	±0.13	±
1 PLACE	±0.25	±
ANGULAR ± 1 °		

DRAFT WHERE APPLICABLE MUST REMAIN WITHIN DIMENSIONS

SCALE	2:1
DESIGN UNITS	METRIC
THIRD ANGLE PROJECTION	REVISE ON CAD ONLY
DIMENSION STYLE	MM ONLY
DRAWN BY	RCARLSON
DATE	01/03/20
CHECKED BY	CKRISHNA
DATE	01/03/27
APPROVED BY	LGEIB
DATE	01/03/28
TITLE	6-20 CIRCUIT RIGHT ANGLE HEADER ASSEMBLY
	MOLEX INCORPORATED
MATERIAL NO.	ENTER-PART
DOCUMENT NO.	SD-30700-520
SHEET NO.	1 OF 2

THIS DRAWING CONTAINS INFORMATION THAT IS PROPRIETARY TO MOLEX INCORPORATED AND SHOULD NOT BE USED WITHOUT WRITTEN PERMISSION

C

PACKAGING		POLARIZATION OPTIONS & CIRCUIT SIZE		PRODUCT DIMENSIONS					
ASSEMBLY P/N TRAY PACKED	ASSEMBLY P/N TUBE PACKED	RIGHT ANGLE HEADER ASSEMBLY (POLARZIATION OPTIONS)	CIRCUIT SIZE	A	B	(C)	D	(E)	HOUSING COLOR
30700-5207	30700-5204	POLARIZATION OPTION #1	20	33.39	22.86	31.14	28.38	12.57	GRAY
30700-5208	30700-5205	POLARIZATION OPTION #2	20	33.39	22.86	31.14	28.38	15.57	BLACK
30700-5209	30700-5206	POLARIZATION OPTION #3	20	33.39	22.86	31.14	28.38	18.57	NATURAL (CREAM)
30700-5187	30700-5184	POLARIZATION OPTION #1	18	30.85	20.32	28.60	25.84	11.31	GRAY
30700-5188	30700-5185	POLARIZATION OPTION #2	18	30.85	20.32	28.60	25.84	14.31	BLACK
30700-5189	30700-5186	POLARIZATION OPTION #3	18	30.85	20.32	28.60	25.84	17.31	NATURAL (CREAM)
30700-5167	30700-5164	POLARIZATION OPTION #1	16	28.31	17.78	26.06	23.30	10.04	GRAY
30700-5168	30700-5165	POLARIZATION OPTION #2	16	28.31	17.78	26.06	23.30	13.04	BLACK
30700-5169	30700-5166	POLARIZATION OPTION #3	16	28.31	17.78	26.06	23.30	16.04	NATURAL (CREAM)
30700-5147	30700-5144	POLARIZATION OPTION #1	14	25.77	15.24	23.52	20.76	8.77	GRAY
30700-5148	30700-5145	POLARIZATION OPTION #2	14	25.77	15.24	23.52	20.76	11.77	BLACK
30700-5149	30700-5146	POLARIZATION OPTION #3	14	25.77	15.24	23.52	20.76	14.77	NATURAL (CREAM)
30700-5120	30700-5124	POLARIZATION OPTION #1	12	23.23	12.70	20.98	18.22	7.50	GRAY
30700-5121	30700-5125	POLARIZATION OPTION #2	12	23.23	12.70	20.98	18.22	10.50	BLACK
30700-5122	30700-5126	POLARIZATION OPTION #3	12	23.23	12.70	20.98	18.22	13.50	NATURAL (CREAM)
30700-5100	30700-5104	POLARIZATION OPTION #1	10	20.69	10.16	18.44	15.68	6.23	GRAY
30700-5101	30700-5105	POLARIZATION OPTION #2	10	20.69	10.16	18.44	15.68	9.23	BLACK
30700-5102	30700-5106	POLARIZATION OPTION #3	10	20.69	10.16	18.44	15.68	12.23	NATURAL (CREAM)
30700-5080	30700-5084	POLARIZATION OPTION #1	8	18.15	7.62	15.90	13.14	4.96	GRAY
30700-5081	30700-5085	POLARIZATION OPTION #2	8	18.15	7.62	15.90	13.14	7.96	BLACK
30700-5082	30700-5086	POLARIZATION OPTION #3	8	18.15	7.62	15.90	13.14	10.96	NATURAL (CREAM)
30700-5060	30700-5064	POLARIZATION OPTION #1	6	15.61	5.08	13.36	10.60	3.69	GRAY
30700-5061	30700-5065	POLARIZATION OPTION #2	6	15.61	5.08	13.36	10.60	6.69	BLACK
30700-5062	30700-5066	POLARIZATION OPTION #3	6	15.61	5.08	13.36	10.60	9.69	NATURAL (CREAM)

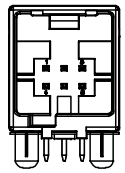

6 CIRCUIT RIGHT ANGLE HEADER 30700-5060

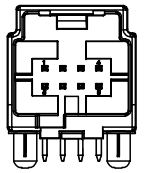

8 CIRCUIT RIGHT ANGLE HEADER 30700-5080

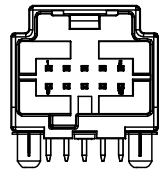

10 CIRCUIT RIGHT ANGLE HEADER 30700-5100

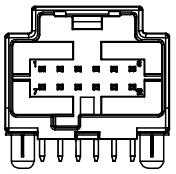

12 CIRCUIT RIGHT ANGLE HEADER 30700-5120

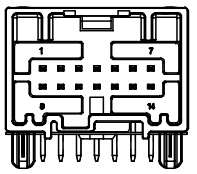

14 CIRCUIT RIGHT ANGLE HEADER 30700-5147

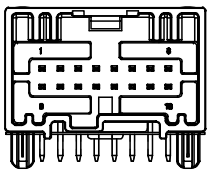

16 CIRCUIT RIGHT ANGLE HEADER 30700-5167

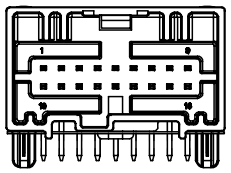

18 CIRCUIT RIGHT ANGLE HEADER 30700-5187

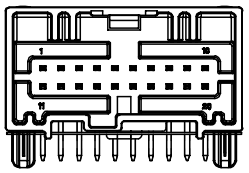

20 CIRCUIT RIGHT ANGLE HEADER 30700-5207

20 CIRCUIT PCB LAYOUT SHOWN BELOW

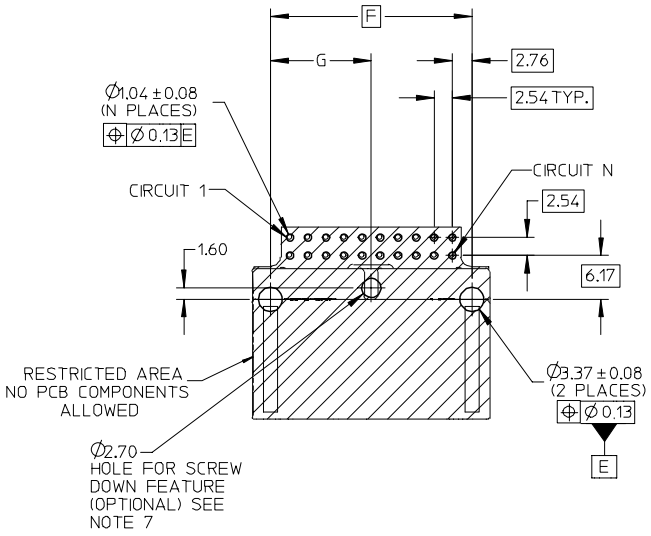

PCB LAYOUT: COMPONENT SIDE
RECOMMENDED PCB THICKNESS: 1.57±0.17

PCB LAYOUT DIMENSIONS		
CIRCUIT SIZE (N)	F	G
20	28.38	14.19
18	25.84	12.92
16	23.30	11.65
14	20.76	10.38
12	18.22	9.11
10	15.68	7.84
8	13.14	6.57
6	10.60	5.30

SEE ECN# UAU2001-0258
EC NO: UAU2007-0542 2007/03/06
DRWN: BDICK01 2007/03/06
CHKD:
APPR: SMARCEAU 2007/03/07
DESCRIPTION
REV
B1

QUALITY SYMBOLS
▼ = 0
▽ = 0

GENERAL TOLERANCES (UNLESS SPECIFIED)

	mm	INCH
4 PLACES	±	±
3 PLACES	±	±
2 PLACES	±0.13	±
1 PLACE	±0.25	±
ANGULAR ± 1 °		

DRAFT WHERE APPLICABLE MUST REMAIN WITHIN DIMENSIONS

SCALE 2:1 | DESIGN UNITS METRIC | THIRD ANGLE PROJECTION | REVISE ON CAD ONLY
DIMENSION STYLE MM ONLY
DRAWN BY RCARLSON DATE 01/03/20
CHECKED BY CKRISHNA DATE 01/03/27
APPROVED BY LGEIB DATE 01/03/28
TITLE: 6-20 CIRCUIT RIGHT ANGLE HEADER ASSEMBLY
MOLEX INCORPORATED
MATERIAL NO. ENTER-PART | DOCUMENT NO. SD-30700-520 | SHEET NO. 2 OF 2

THIS DRAWING CONTAINS INFORMATION THAT IS PROPRIETARY TO MOLEX INCORPORATED AND SHOULD NOT BE USED WITHOUT WRITTEN PERMISSION

C