KR Electronics, Inc.

General Description

KR Electronics part number 3048 is a 135 MHz bandpass filter. The filter has a minimum 1 dB bandwidth of 100 MHz and a maximum 45 dB bandwidth of 144 MHz. Other center frequencies and bandwidths are available. Please consult the factory.

Features

- 135 MHz Bandpass Filter
- 100 MHz min 1 dB Bandwidth
- 144 MHz max 45 dB Bandwidth
- Sharp Elliptic Type Design
- 50 Ω Source and Load
- Surface Mount
- Also available with SMA Connectors

Typical Performance

Overall Response

(10 dB/div)



KR Electronics, Inc.
91 Avenel Street
Avenel, NJ 07001

Web *www.krfilters.com*
Email *sales@krfilters.com*
Phone *(732) 636-1900*
Fax *(732) 636-1982*

© 2011, KR Electronics, Inc.

KR Electronics 3048

Passband Amplitude & Group Delay

(1 dB/div & 10 nsec/div)

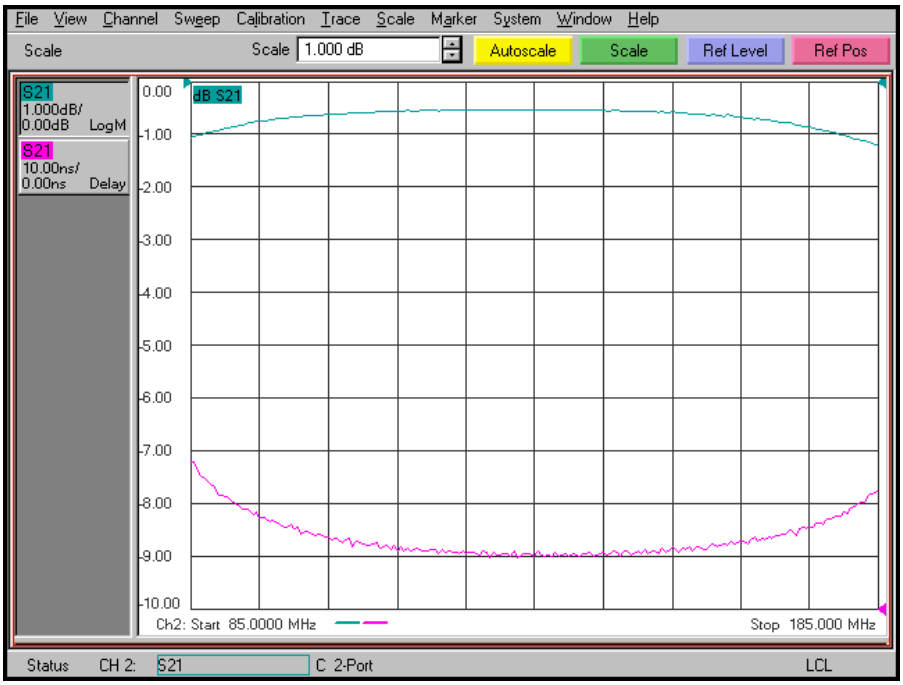

Overall Response

(10 dB/div)



KR Electronics, Inc.
91 Avenel Street
Avenel, NJ 07001

Web *www.krfilters.com*
Email *sales@krfilters.com*
Phone *(732) 636-1900*
Fax *(732) 636-1982*

© 2011, KR Electronics, Inc.

KR Electronics 3048

Specifications

Parameter	Specification	
Filter type	Bandpass	
Center Frequency	135 MHz	
Insertion Loss	2 dB max	0.8 dB typical
1 dB Bandwidth	100 MHz min	85 MHz & 185 MHz
45 dB Bandwidth	144 MHz max	64 MHz & 208 MHz
Source and Load	50 Ω	

Physical Dimensions

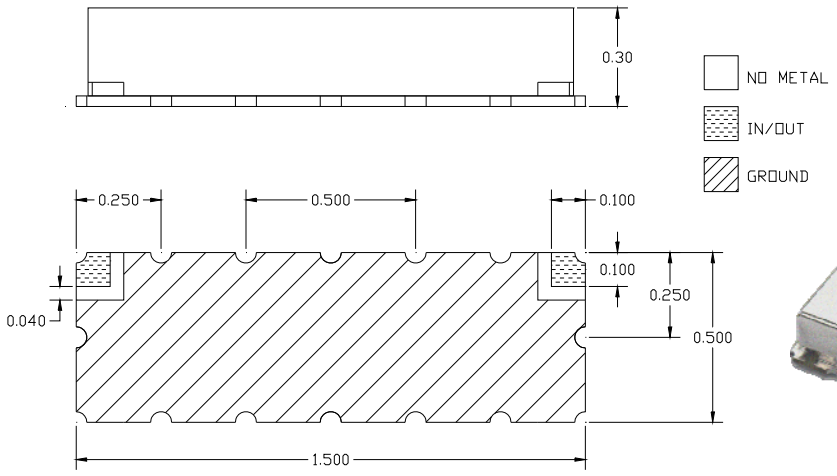

Notes:
1. Surface mount package, metal cover
2. Dimensions in inches
3. Max reflow temperature 209° C for 10 sec
4. If boards are cleaned after installation units must be completely dried
5. Also available in metal case with SMA connectors

KR Electronics, Inc.
91 Avenel Street
Avenel, NJ 07001

Web *www.krfilters.com*
Email *sales@krfilters.com*
Phone *(732) 636-1900*
Fax *(732) 636-1982*

© 2011, KR Electronics, Inc.