# Feed-through terminal block - DTMED 6 - 3034413

Please be informed that the data shown in this PDF Document is generated from our Online Catalog. Please find the complete data in the user's documentation. Our General Terms of Use for Downloads are valid (http://download.phoenixcontact.com)



Feed-through terminal block, Connection method: Leg spring connection, Cross section: 0.5 mm² - 10 mm², AWG: 20 - 8, Width: 8.2 mm, Height: 49.6 mm, Color: gray, Mounting type: NS 35/7,5, NS 35/15

## Key commercial data

| | |
|---|---|
| Packing unit | 1 1 |
| Minimum order quantity | 10 1 |
| Weight per Piece (excluding packing) | 19.84 GRM |
| Custom tariff number | 85369010 |
| Country of origin | Poland |

## Technical data

### General

| | |
|---|---|
| Number of levels | 1 |
| Number of connections | 2 |
| Color | gray |
| Insulating material | PA |
| Inflammability class according to UL 94 | V0 |
| Rated surge voltage | 8 kV |
| Pollution degree | 3 |
| Surge voltage category | III |
| Insulating material group | I |
| Connection in acc. with standard | IEC 60947-7-1 |
| Nominal current $I_N$ | 41 A |
| Nominal voltage $U_N$ | 500 V |
| Open side panel | ja |
| Shock protection test specification | DIN EN 50274 (VDE 0660-514):2002-11 |
| Back of the hand protection | guaranteed |

# Feed-through terminal block - DTMED 6 - 3034413

## Technical data

### General

| | |
|---|---|
| Finger protection | guaranteed |
| Surge voltage test setpoint | 9.8 kV |
| Result of surge voltage test | Test passed |
| Power frequency withstand voltage setpoint | 2.2 kV |
| Result of power-frequency withstand voltage test | Test passed |
| Checking the mechanical stability of terminal points (5 x conductor connection) | Test passed |
| Bending test rotation speed | 10 rpm |
| Bending test turns | 135 |
| Bending test conductor cross section/weight | 0.5 mm² / 0.3 kg |
| | 6 $mm^2$ / 1.4 kg |
| | 10 mm² / 2 kg |
| Result of bending test | Test passed |
| Conductor cross section tensile test | 0.5 mm² |
| Tractive force setpoint | 20 N |
| Conductor cross section tensile test | 6 mm² |
| Tractive force setpoint | 80 N |
| Conductor cross section tensile test | 10 mm² |
| Tractive force setpoint | 90 N |
| Tensile test result | Test passed |
| Tight fit on carrier | NS 35 |
| Setpoint | 5 N |
| Result of tight fit test | Test passed |
| Requirements, voltage drop | ≤ 3.2 mV |
| Result of voltage drop test | Test passed |
| Temperature-rise test | Test passed |
| Conductor cross section short circuit testing | 6 mm² |
| Short-time current | 0.72 kA |
| Conductor cross section short circuit testing | 10 mm² |
| Short-time current | 1.2 kA |
| Short circuit stability result | Test passed |
| Ageing test for screwless modular terminal block temperature cycles | 192 |
| Result of aging test | Test passed |
| Proof of thermal characteristics (needle flame) effective duration | 30 s |
| Result of thermal test | Test passed |
| Test specification, oscillation, broadband noise | DIN EN 50155 (VDE 0115-200):2008-03 |
| Test spectrum | Service life test category 1, class B, body mounted |

# Feed-through terminal block - DTMED 6 - 3034413

## Technical data

### General

| | |
|---|---|
| Test frequency | $f_1$ = 5 Hz to $f_2$ = 150 Hz |
| ASD level | 1.857 $(m/s^2)^2$/Hz |
| Acceleration | 0.8 g |
| Test duration per axis | 5 h |
| Test directions | X-, Y- and Z-axis |
| Oscillation, broadband noise test result | Test passed |
| Test specification, shock test | DIN EN 50155 (VDE 0115-200):2008-03 |
| Shock form | Half-sine |
| Acceleration | 5 g |
| Shock duration | 30 ms |
| Number of shocks per direction | 3 |
| Test directions | X-, Y- and Z-axis (pos. and neg.) |
| Shock test result | Test passed |
| Temperature index, insulating material (DIN EN 60216-1 (VDE 0304-21)) | 130 °C |
| Static insulating material application in cold | -60 °C |

### Dimensions

| | |
|---|---|
| Width | 8.2 mm |
| Length | 100.8 mm |
| Height | 49.6 mm |
| Height NS 35/7,5 | 49.6 mm |
| Height NS 35/15 | 57.1 mm |

### Connection data

| | |
|---|---|
| Conductor cross section solid min. | 0.5 mm² |
| Conductor cross section solid max. | 10 mm² |
| Conductor cross section AWG/kcmil min. | 20 |
| Conductor cross section AWG/kcmil max | 8 |
| Conductor cross section stranded min. | 0.5 mm² |
| Conductor cross section stranded max. | 6 mm² |
| Min. AWG conductor cross section, stranded | 20 |
| Max. AWG conductor cross section, stranded | 8 |
| Conductor cross section stranded, with ferrule without plastic sleeve min. | 0.5 mm² |
| Conductor cross section stranded, with ferrule without plastic sleeve max. | 6 mm² |
| Conductor cross section stranded, with ferrule with plastic sleeve min. | 0.5 mm² |
| Conductor cross section stranded, with ferrule with plastic sleeve max. | 6 mm² |
| 2 conductors with same cross section, stranded, TWIN ferrules with plastic sleeve, min. | 0.5 mm² |

# Feed-through terminal block - DTMED 6 - 3034413

## Technical data

### Connection data

| | |
|---|---|
| 2 conductors with same cross section, stranded, TWIN ferrules with plastic sleeve, max. | 1.5 mm² |
| Connection method | Leg spring connection |
| Stripping length | 12 mm |
| Internal cylindrical gage | A5 |

## Classifications

### eCl@ss

| | |
|---|---|
| eCl@ss 4.0 | 27141120 |
| eCl@ss 4.1 | 27141120 |
| eCl@ss 5.0 | 27141120 |
| eCl@ss 5.1 | 27141120 |
| eCl@ss 6.0 | 27141120 |
| eCl@ss 7.0 | 27141120 |
| eCl@ss 8.0 | 27141120 |

### ETIM

| | |
|---|---|
| ETIM 2.0 | EC000897 |
| ETIM 3.0 | EC000897 |
| ETIM 4.0 | EC000897 |
| ETIM 5.0 | EC000897 |

### UNSPSC

| | |
|---|---|
| UNSPSC 6.01 | 30211811 |
| UNSPSC 7.0901 | 39121410 |
| UNSPSC 11 | 39121410 |
| UNSPSC 12.01 | 39121410 |
| UNSPSC 13.2 | 39121410 |

## Approvals

### Approvals

Approvals

UL Recognized / cUL Recognized / GOST / GOST / cULus Recognized

# Feed-through terminal block - DTMED 6 - 3034413

## Approvals

Ex Approvals

Approvals submitted

### Approval details

UL Recognized

| | | B | C | D |
|---|---|---|---|---|
| mm²/AWG/kcmil | 24-8 | 24-8 | 24-8 | 24-8 |
| Nominal current IN | 30 A | 30 A | 30 A | 5 A |
| Nominal voltage UN | 600 V | 300 V | 300 V | 600 V |

cUL Recognized

| | | B | C | D |
|---|---|---|---|---|
| mm²/AWG/kcmil | 24-8 | 24-8 | 24-8 | 24-8 |
| Nominal current IN | 30 A | 30 A | 30 A | 5 A |
| Nominal voltage UN | 600 V | 300 V | 300 V | 600 V |

GOST

GOST

cULus Recognized

## Accessories

Accessories

Bridge

# Feed-through terminal block - DTMED 6 - 3034413

## Accessories

Switching jumper - SB-ME 2-8 - 3034468



Switching jumper, Length: 24.7 mm, Width: 16.4 mm, Number of positions: 2, Color: gray/orange

---

Plug-in bridge - FBS 2-8 - 3030284



Plug-in bridge, Number of positions: 2, Color: red

---

Plug-in bridge - FBS 3-8 - 3030297



Plug-in bridge, Number of positions: 3, Color: red

---

Plug-in bridge - FBS 4-8 - 3030307



Plug-in bridge, Number of positions: 4, Color: red

---

Plug-in bridge - FBS 5-8 - 3030310



Plug-in bridge, Number of positions: 5, Color: red

---

# Feed-through terminal block - DTMED 6 - 3034413

## Accessories

Plug-in bridge - FBS 10-8 - 3030323



Plug-in bridge, Number of positions: 10, Color: red

Plug-in bridge - FBS 6-8 - 3032470



Plug-in bridge, Number of positions: 6, Color: red

Plug-in bridge - FBS 1/3-8 - 3032363



Plug-in bridge, Number of positions: 3, Pin assignment: 1,3, Color: red

Plug-in bridge - FBS 1/4-8 - 3032376



Plug-in bridge, Number of positions: 4, Pin assignment: 1,4, Color: red

Plug-in bridge - FBS 1/3/5-8 - 3032389



Plug-in bridge, Number of positions: 5, Pin assignment: 1,3,5, Color: red

# Feed-through terminal block - DTMED 6 - 3034413

## Accessories

Plug-in bridge - FBS 1/4/7/10-8 - 3032402



Plug-in bridge, Number of positions: 10, Pin assignment: 1,4,7,10, Color: red

---

Switching jumper - SB-ME 2-8 - 3034468



Switching jumper, Length: 24.7 mm, Width: 16.4 mm, Number of positions: 2, Color: gray/orange

---

Switching jumper - SB-ME 3-8 - 3032800



Switching jumper, Length: 24.7 mm, Width: 24.6 mm, Number of positions: 3, Color: gray/orange

---

Switching jumper - SB-ME 4-8 - 3034484



Switching jumper, Length: 24.7 mm, Width: 32.8 mm, Number of positions: 4, Color: gray/orange

---

Plug-in bridge - FBS 1/5-8 - 3032381

Plug-in bridge, Number of positions: 5, Pin assignment: 1,5

---

# Feed-through terminal block - DTMED 6 - 3034413

## Accessories

Plug-in bridge - FBSRH 2-8 - 3033802



Plug-in bridge, Number of positions: 2, Color: red

---

Plug-in bridge - FBSRH 3-8 - 3033803



Plug-in bridge, Number of positions: 3, Color: red

---

Plug-in bridge - FBSRH 4-8 - 3033804



Plug-in bridge, Number of positions: 4, Color: red

---

Plug-in bridge - FBSR 2-8 - 3033808



Plug-in bridge, Number of positions: 2, Color: red

---

Plug-in bridge - FBSR 3-8 - 3001597



Plug-in bridge, Number of positions: 3, Color: red

---

# Feed-through terminal block - DTMED 6 - 3034413

## Accessories

Plug-in bridge - FBSR 5-8 - 3033809



Plug-in bridge, Number of positions: 5, Color: red

Plug-in bridge - FBSR 10-8 - 3001599



Plug-in bridge, Number of positions: 10, Color: red

Plug-in bridge - FBSR 16-8 - 3033816



Plug-in bridge, Number of positions: 16, Color: red

Plug-in bridge - FBSR 1/6/11/16-8 - 3033820



Plug-in bridge, non-adjacent, Number of positions: 16, Pin assignment: 1, 6, 11, 16, Color: red

Plug-in bridge - FBSR 1/7/13/16-8 - 3033821



Plug-in bridge, non-adjacent, Number of positions: 16, Pin assignment: 1, 7, 13, 16, Color: red

# Feed-through terminal block - DTMED 6 - 3034413

## Accessories

Plug-in bridge - FBSR 1/6/11/14-8 - 3033822



Plug-in bridge, non-adjacent, Number of positions: 16, Pin assignment: 1, 6, 11, 14, Color: red

---

Cover profile

Cover profile - AP-ME METER - 3034361



Cover profile, for covering terminal strips, snapped onto APT-ME cover profile carrier or APH-ME end bracket. A cover profile carrier should be positioned at the ends and at intervals of around 40 cm. Length supplied: 1 m

---

Cover profile - APH-ME - 3034374



Cover profile carrier for mounting on NS 35/7.5 DIN rail for attaching the cover profile AP-ME

---

Cover profile - APT-ME - 3034358



Cover profile carrier for mounting on NS 35/7.5 DIN rail for attaching the cover profile AP-ME

---

Covering hood - AH-ME - 3240265



Cover, for the contact- and dust-protected encapsulation of the components

---

# Feed-through terminal block - DTMED 6 - 3034413

## Accessories

### End cover

End cover - D-DTME 6 - 3034426



Cover, width: 2.2 mm, color: gray

---

Spacer plate - DP PS-6 - 3036738



Spacer plate, Color: red

---

### Flange

End clamp - CARRIER 35-8 - 3034387



End clamp, Width: 8.2 mm, Color: gray, Mounting type: NS 35/7,5, NS 35/15

---

### Mounting rail

DIN rail perforated - NS 35/ 7,5 PERF 2000MM - 0801733



DIN rail, material: steel galvanized and passivated with a thick layer, perforated, height 7.5 mm, width 35 mm, length: 2000 mm

---

# Feed-through terminal block - DTMED 6 - 3034413

## Accessories

DIN rail - NS 35/ 7,5 UNPERF 2000MM - 0801681



DIN rail, material: Steel, unperforated, height 7.5 mm, width 35 mm, length: 2 m

---

DIN rail - NS 35/ 7,5 WH PERF 2000MM - 1204119



DIN rail 35 mm (NS 35)

---

DIN rail - NS 35/ 7,5 WH UNPERF 2000MM - 1204122



DIN rail 35 mm (NS 35)

---

DIN rail, unperforated - NS 35/ 7,5 AL UNPERF 2000MM - 0801704



DIN rail, unperforated, Width: 35 mm, Height: 7.5 mm, Length: 2000 mm, Color: silver

---

DIN rail - NS 35/ 7,5 ZN PERF 2000MM - 1206421



DIN rail, material: Galvanized, perforated, height 7.5 mm, width 35 mm, length: 2 m

---

# Feed-through terminal block - DTMED 6 - 3034413

## Accessories

DIN rail - NS 35/ 7,5 ZN UNPERF 2000MM - 1206434



DIN rail, material: Galvanized, unperforated, height 7.5 mm, width 35 mm, length: 2 m

---

DIN rail - NS 35/ 7,5 CU UNPERF 2000MM - 0801762



DIN rail, material: Copper, unperforated, height 7.5 mm, width 35 mm, length: 2 m

---

End cap - NS 35/ 7,5 CAP - 1206560

DIN rail end piece, for DIN rail NS 35/7.5



---

### Screwdriver tools

Screwdriver - SZS 0,6X3,5 - 1205053



Actuation tool, for ST terminal blocks, insulated, also suitable for use as a bladed screwdriver, size: 0.6 x 3.5 x 100 mm, 2-component grip, with non-slip grip

---

### Test plug terminal block

Test adapter - PAI-4-FIX BU - 3032729



Test adapter, Color: blue

# Feed-through terminal block - DTMED 6 - 3034413

## Accessories

Test adapter - PAI-4-FIX OG - 3034455



Test adapter, Color: orange

Test adapter - PAI-4-FIX YE - 3032745



Test adapter, Color: yellow

Test adapter - PAI-4-FIX RD - 3032732



Test adapter, Color: red

Test adapter - PAI-4-FIX GN - 3032758



Test adapter, Color: green

Test adapter - PAI-4-FIX BK - 3032774



Test adapter, Color: black

# Feed-through terminal block - DTMED 6 - 3034413

## Accessories

Test adapter - PAI-4-FIX GY - 3032790



Test adapter, Color: gray

Test adapter - PAI-4-FIX VT - 3032761



Test adapter, Color: violet

Test adapter - PAI-4-FIX BN - 3032787



Test adapter, Color: brown

Test adapter - PS-6 - 3030996



Test adapter, Color: red

Test plugs - PS-6/2,3MM RD - 3038736



Test plugs, Color: red

## Drawings

# Feed-through terminal block - DTMED 6 - 3034413

Circuit diagram



Schematic diagram

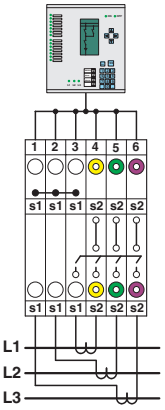


Interlinked three-phase current transformer set

Connection diagram

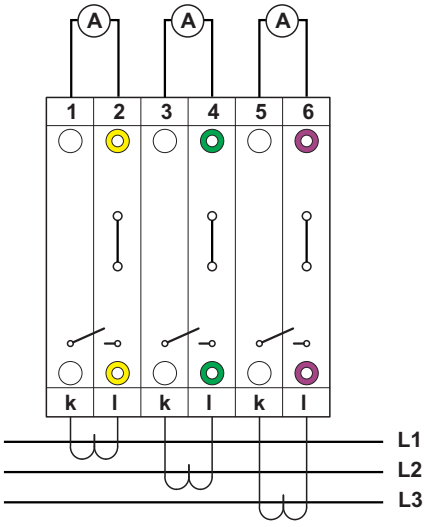


Connection diagram

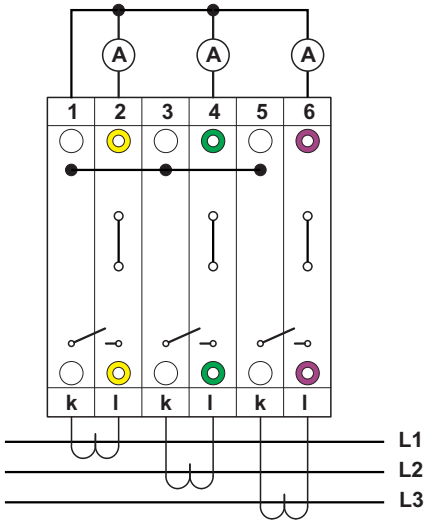

# Feed-through terminal block - DTMED 6 - 3034413

Connection diagram

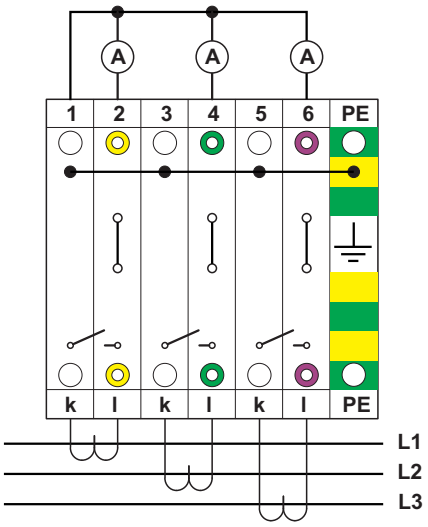


with PE terminals having the same contours

Connection diagram

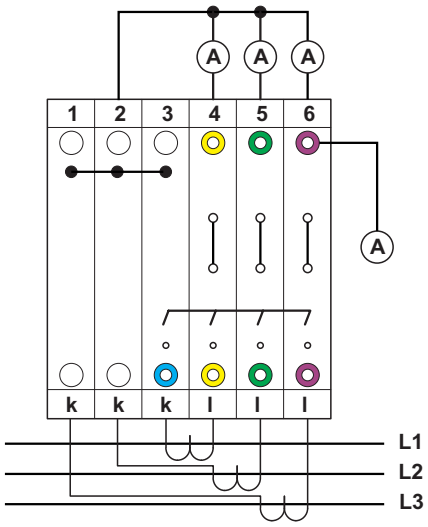


chained

Schematic diagram

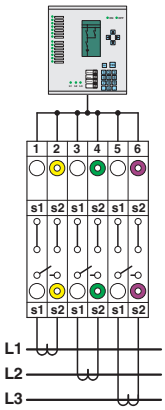


Simple three-phase current transformer set

Schematic diagram

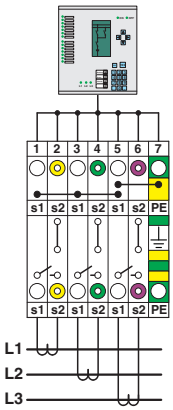


Interlinked three-phase current transformer set with grounded star point

© Phoenix Contact 2013 - all rights reserved
http://www.phoenixcontact.com