Test disconnect terminal block - RTO 4-T-TC - 3000558

Please be informed that the data shown in this PDF Document is generated from our Online Catalog. Please find the complete data in the user's documentation. Our General Terms of Use for Downloads are valid (http://phoenixcontact.com/download)



Test disconnect terminal block, with transparent covers, nom. voltage: 500 V, nominal current: 41 A, connection method: Bolt connection, length: 82.4 mm, width: 12.3 mm, color: gray, mounting: NS 35/7,5, NS 35/15

Your advantages

- The screws are secured against loosening by captive spring-loaded spacers
- Easy bridging and potential distribution using the patented plug-in bridges from the CLIPLINE complete system
- Quick and easy connection with fold-up hinged covers which hold the clamping nuts captive. With the covers folded open, the bolt is free to accept the cable lugs
- After closing and engaging the covers, the clamping nut automatically aligns with the threaded bolt and can be tightened easily.
- Large-surface labeling options in the terminal center and above the terminal points
- The use of the switching lock effectively prevents unintentional switching
- The hinged cover cover the live metal parts including the insulated cable lugs in the clamping area so that they are touch proof
- Testing with the standardized test adapters and test plugs of the CLIPLINE complete system

RoHS

Key Commercial Data

Packing unit	25 pc
GTIN	4 055626 024806
GTIN	4055626024806

Technical data

General

Note	Note: the BE-RT... path extension is to be used for non-insulated cable lugs (see accessories).
Number of levels	1
Number of connections	2
Potentials	1
Nominal cross section	6 mm²
Color	gray
Insulating material	PA

Test disconnect terminal block - RTO 4-T-TC - 3000558

Technical data

General

Flammability rating according to UL 94	V0
Area of application	Machine building
	Plant engineering
Rated surge voltage	6 kV
Degree of pollution	3
Overvoltage category	III
Insulating material group	I
Maximum power dissipation for nominal condition	1.31 W
Maximum load current	41 A
Nominal current I_N	41 A
Nominal voltage U_N	500 V
Open side panel	Yes
Ambient temperature (operation)	-60 °C ... 85 °C
Ambient temperature (storage/transport)	-25 °C ... 55 °C (For a short time, not exceeding 24 h, -60 to +70 °C)
Permissible humidity (storage/transport)	30 % ... 70 %
Ambient temperature (assembly)	-5 °C ... 70 °C
Ambient temperature (actuation)	-5 °C ... 70 °C
Shock protection test specification	DIN EN 50274 (VDE 0660-514):2002-11
Back of the hand protection	guaranteed
Finger protection	guaranteed
Note regarding shock protection	Electric shock protection only with insulated cable lug guaranteed.
Result of surge voltage test	Test passed
Result of power-frequency withstand voltage test	Test passed
Power frequency withstand voltage setpoint	1.89 kV
Result of the test for mechanical stability of terminal points (5 x conductor connection)	Test passed
Result of tight fit on support	Test passed
Tight fit on carrier	NS 35
Setpoint	5 N
Result of voltage-drop test	Test passed
Result of temperature-rise test	Test passed
Requirement temperature-rise test	Increase in temperature ≤ 45 K
Short circuit stability result	Test passed
Conductor cross section short circuit testing	6 mm²
Short-time current	0.72 kA
Result of thermal test	Test passed
Proof of thermal characteristics (needle flame) effective duration	30 s
Oscillation, broadband noise test result	Test passed
Test specification, oscillation, broadband noise	DIN EN 50155 (VDE 0115-200):2008-03
Test spectrum	Service life test category 2, bogie-mounted
Test frequency	f_1 = 5 Hz to f_2 = 250 Hz

Test disconnect terminal block - RTO 4-T-TC - 3000558

Technical data

General

ASD level	6.12 $(m/s^2)^2$/Hz
Acceleration	3.12 g
Test duration per axis	5 h
Test directions	X-, Y- and Z-axis
Shock test result	Test passed
Test specification, shock test	DIN EN 50155 (VDE 0115-200):2008-03
Shock form	Half-sine
Acceleration	30g
Shock duration	18 ms
Number of shocks per direction	3
Test directions	X-, Y- and Z-axis (pos. and neg.)
Relative insulation material temperature index (Elec., UL 746 B)	130 °C
Temperature index of insulation material (DIN EN 60216-1 (VDE 0304-21))	130 °C
Static insulating material application in cold	-60 °C
Surface flammability NFPA 130 (ASTM E 162)	passed
Specific optical density of smoke NFPA 130 (ASTM E 662)	passed
Calorimetric heat release NFPA 130 (ASTM E 1354)	28 MJ/kg
Smoke gas toxicity NFPA 130 (SMP 800C)	passed
Fire protection for rail vehicles (DIN EN 45545-2) R22	HL 1 - HL 3
Fire protection for rail vehicles (DIN EN 45545-2) R23	HL 1 - HL 3
Fire protection for rail vehicles (DIN EN 45545-2) R24	HL 1 - HL 3
Fire protection for rail vehicles (DIN EN 45545-2) R26	HL 1 - HL 3

Dimensions

Width	12.3 mm
End cover width	2.2 mm
Length	82.4 mm
Height NS 35/7,5	51 mm
Height NS 35/15	58.5 mm

Connection data

Connection	1 level
Connection method	Bolt connection
Stripping length	The stripping length depends on the specification provided by the cable lug manufacturer.
Connection in acc. with standard	IEC 60947-7-1
Cable lug connection according to standard	DIN 46234:1980-03
Min. cross section for cable lug connection	0.5 mm²
Max. cross section for cable lug connection	6 mm²
Hole diameter, min.	4.3 mm
Cable lug width, max.	8 mm

Test disconnect terminal block - RTO 4-T-TC - 3000558

Technical data

Connection data

Bolt diameter	4 mm
Screw thread	M4
Tightening torque, min	1.8 Nm
Tightening torque max	1.8 Nm
Cable lug connection according to standard	DIN 46237:1970-07
Min. cross section for cable lug connection	0.5 mm²
Max. cross section for cable lug connection	6 mm²
Hole diameter, min.	4.3 mm
Cable lug width, max.	8 mm
Bolt diameter	4 mm
Screw thread	M4
Tightening torque, min	1.8 Nm
Tightening torque max	1.8 Nm

Standards and Regulations

Connection in acc. with standard	IEC 60947-7-1
Flammability rating according to UL 94	V0

Environmental Product Compliance

REACh SVHC	Lead 7439-92-1
China RoHS	Environmentally Friendly Use Period = 50 years
	For details about hazardous substances go to tab “Downloads”, Category “Manufacturer's declaration”

Drawings

Test disconnect terminal block - RTO 4-T-TC - 3000558

Connection diagram

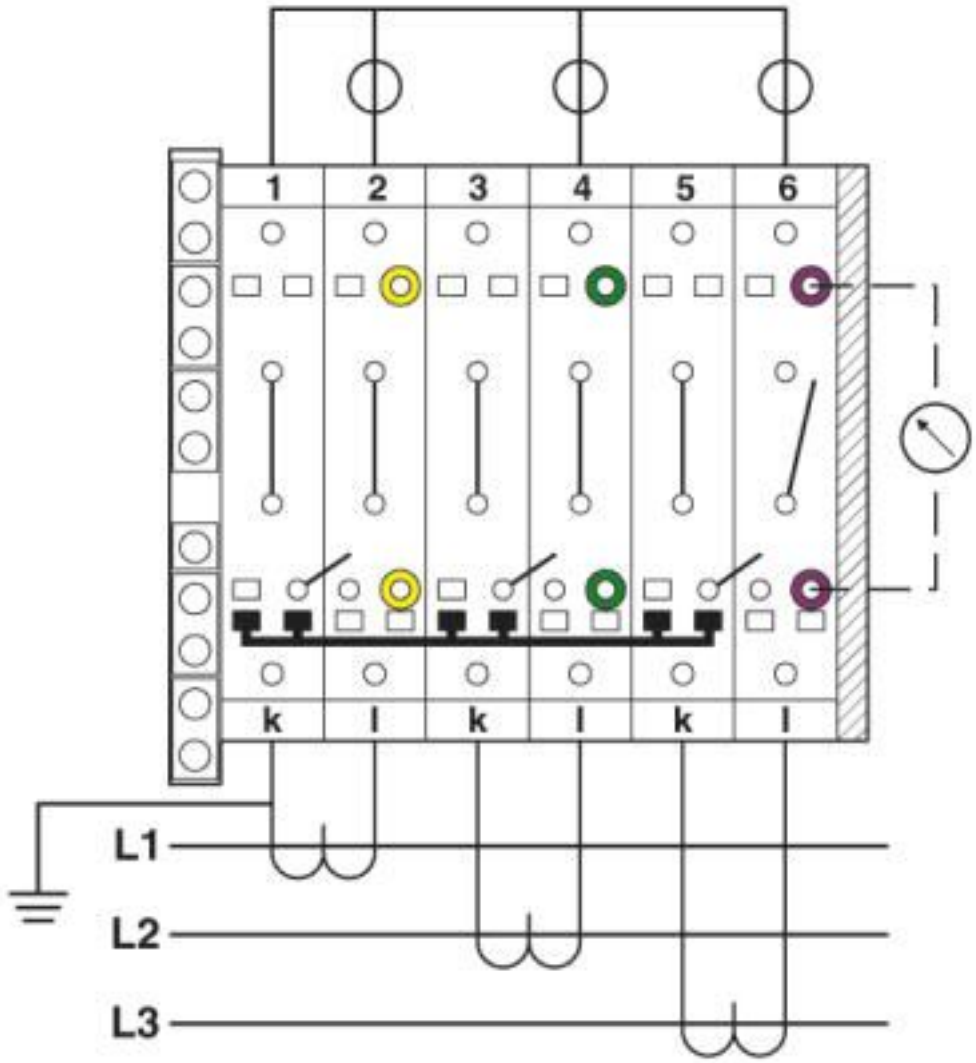

Three-phase transducer test set

Test disconnect terminal block - RTO 4-T-TC - 3000558

Connection diagram

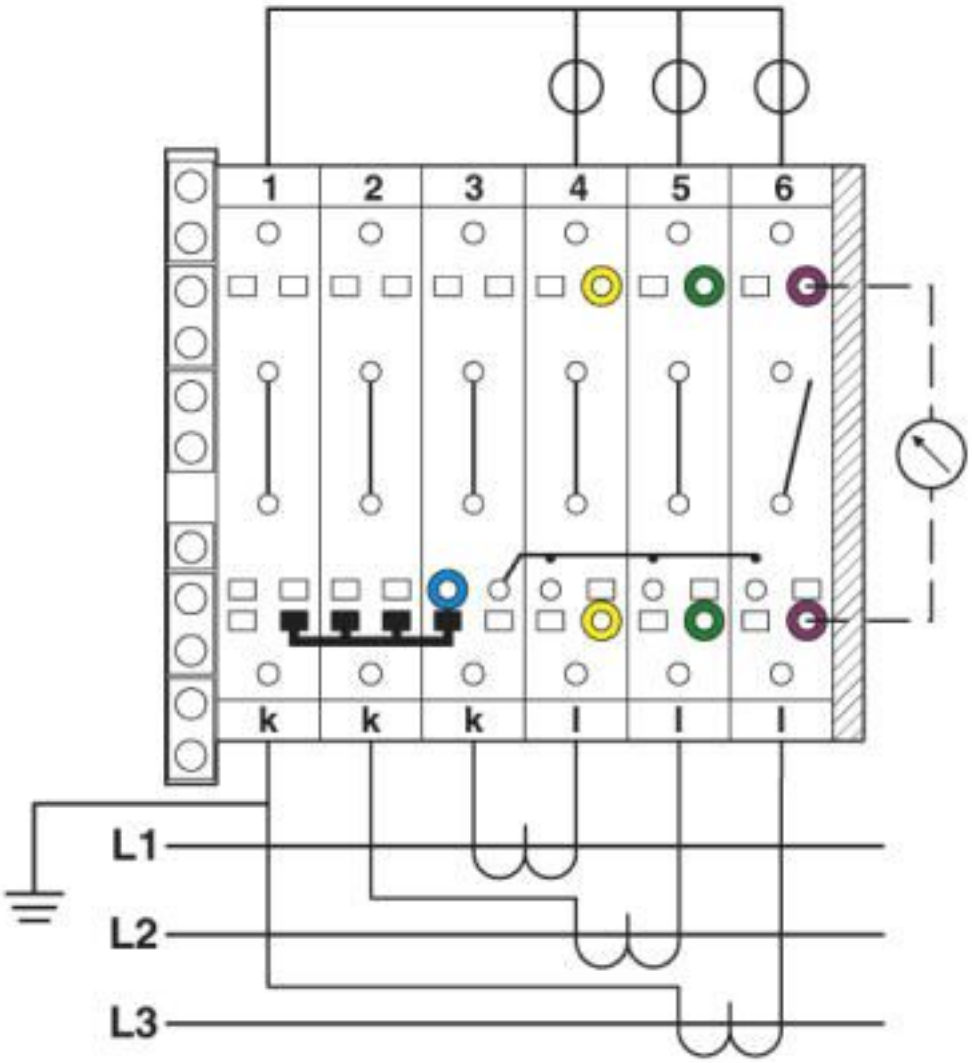

Three-phase linked transducer test set

Test disconnect terminal block - RTO 4-T-TC - 3000558

Connection diagram

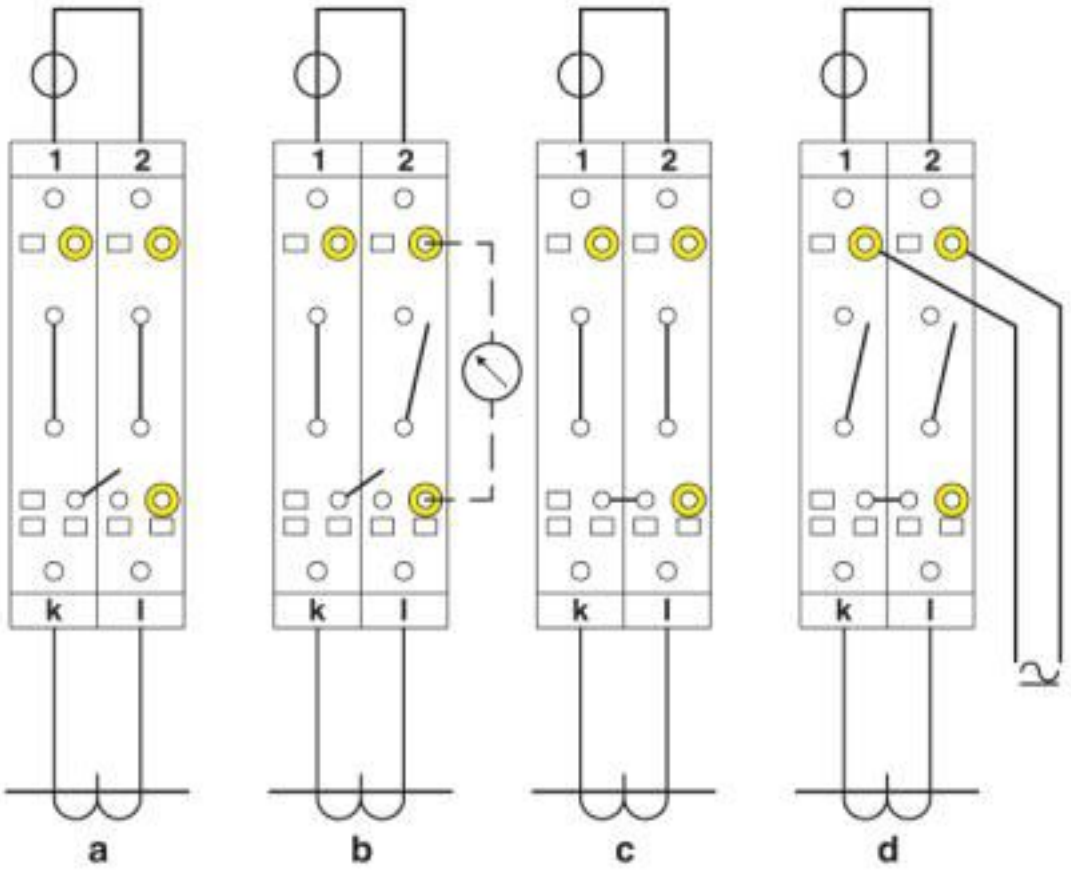

Simple current transformer test circuit
a = normal operation
b = measured value testing
c = transformer testing
d = relay testing

Circuit diagram

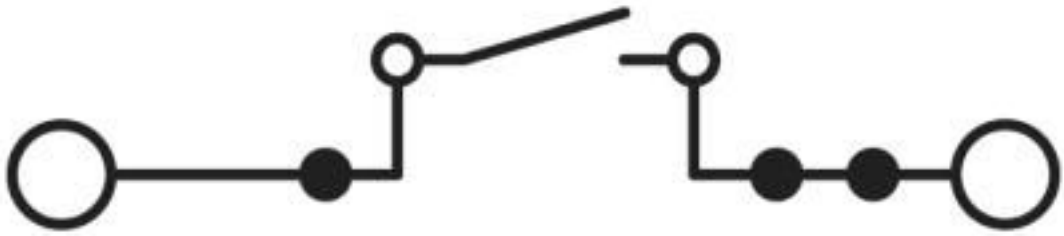

Classifications

eCl@ss

eCl@ss 10.0.1	27141126
eCl@ss 4.0	27141100

Test disconnect terminal block - RTO 4-T-TC - 3000558

Classifications

eCl@ss

eCl@ss 4.1	27141100
eCl@ss 5.0	27141100
eCl@ss 5.1	27141100
eCl@ss 6.0	27141100
eCl@ss 7.0	27141120
eCl@ss 8.0	27141126
eCl@ss 9.0	27141126

ETIM

ETIM 2.0	EC000902
ETIM 3.0	EC000902
ETIM 4.0	EC000902
ETIM 5.0	EC000902
ETIM 6.0	EC000902
ETIM 7.0	EC000902

UNSPSC

UNSPSC 6.01	30211811
UNSPSC 7.0901	39121410
UNSPSC 11	39121410
UNSPSC 12.01	39121410
UNSPSC 13.2	39121410
UNSPSC 18.0	39121410
UNSPSC 19.0	39121410
UNSPSC 20.0	39121410
UNSPSC 21.0	39121410

Approvals

Approvals

Approvals

UL Recognized / cUL Recognized / EAC / EAC / cULus Recognized

Ex Approvals

Approval details

Test disconnect terminal block - RTO 4-T-TC - 3000558

Approvals

UL Recognized	http://database.ul.com/cgi-bin/XYV/template/LISEXT/1FRAME/index.htm	FILE E 60425

	B	C
Nominal voltage UN	600 V	600 V
Nominal current IN	30 A	30 A

cUL Recognized	http://database.ul.com/cgi-bin/XYV/template/LISEXT/1FRAME/index.htm	FILE E 60425

	B	C
Nominal voltage UN	600 V	600 V
Nominal current IN	30 A	30 A

EAC	RU C-DE.A*30.B.01742

EAC	RU C-DE.BL08.B.00540

cULus Recognized

Accessories

Accessories

DIN rail

DIN rail perforated - NS 35/ 7,5 PERF 2000MM - 0801733



DIN rail perforated, Standard profile, width: 35 mm, height: 7.5 mm, acc. to EN 60715, material: Steel, galvanized, passivated with a thick layer, length: 2000 mm, color: silver

Test disconnect terminal block - RTO 4-T-TC - 3000558

Accessories

DIN rail, unperforated - NS 35/ 7,5 UNPERF 2000MM - 0801681



DIN rail, unperforated, Standard profile, width: 35 mm, height: 7.5 mm, acc. to EN 60715, material: Steel, galvanized, passivated with a thick layer, length: 2000 mm, color: silver

DIN rail perforated - NS 35/ 7,5 WH PERF 2000MM - 1204119



DIN rail perforated, Standard profile, width: 35 mm, height: 7.5 mm, acc. to EN 60715, material: Steel, Galvanized, white passivated, length: 2000 mm, color: silver

DIN rail, unperforated - NS 35/ 7,5 WH UNPERF 2000MM - 1204122



DIN rail, unperforated, Standard profile, width: 35 mm, height: 7.5 mm, acc. to EN 60715, material: Steel, Galvanized, white passivated, length: 2000 mm, color: silver

DIN rail, unperforated - NS 35/ 7,5 AL UNPERF 2000MM - 0801704



DIN rail, unperforated, Standard profile, width: 35 mm, height: 7.5 mm, acc. to EN 60715, material: Aluminum, uncoated, length: 2000 mm, color: silver

DIN rail perforated - NS 35/ 7,5 ZN PERF 2000MM - 1206421



DIN rail perforated, Standard profile, width: 35 mm, height: 7.5 mm, acc. to EN 60715, material: Steel, galvanized, length: 2000 mm, color: silver

Test disconnect terminal block - RTO 4-T-TC - 3000558

Accessories

DIN rail, unperforated - NS 35/ 7,5 ZN UNPERF 2000MM - 1206434



DIN rail, unperforated, Standard profile, width: 35 mm, height: 7.5 mm, acc. to EN 60715, material: Steel, galvanized, length: 2000 mm, color: silver

---

DIN rail, unperforated - NS 35/ 7,5 CU UNPERF 2000MM - 0801762



DIN rail, unperforated, Standard profile, width: 35 mm, height: 7.5 mm, acc. to EN 60715, material: Copper, uncoated, length: 2000 mm, color: copper-colored

---

End cap - NS 35/ 7,5 CAP - 1206560



DIN rail end piece, for DIN rail NS 35/7.5

DIN rail perforated - NS 35/15 PERF 2000MM - 1201730



DIN rail perforated, Standard profile, width: 35 mm, height: 15 mm, similar to EN 60715, material: Steel, galvanized, passivated with a thick layer, length: 2000 mm, color: silver

---

DIN rail, unperforated - NS 35/15 UNPERF 2000MM - 1201714



DIN rail, unperforated, Standard profile, width: 35 mm, height: 15 mm, similar to EN 60715, material: Steel, galvanized, passivated with a thick layer, length: 2000 mm, color: silver

---

Test disconnect terminal block - RTO 4-T-TC - 3000558

Accessories

DIN rail perforated - NS 35/15 WH PERF 2000MM - 0806602



DIN rail perforated, Standard profile, width: 35 mm, height: 15 mm, similar to EN 60715, material: Steel, Galvanized, white passivated, length: 2000 mm, color: silver

DIN rail, unperforated - NS 35/15 WH UNPERF 2000MM - 1204135



DIN rail, unperforated, Standard profile, width: 35 mm, height: 15 mm, similar to EN 60715, material: Steel, Galvanized, white passivated, length: 2000 mm, color: silver

DIN rail, unperforated - NS 35/15 AL UNPERF 2000MM - 1201756



DIN rail, unperforated, Standard profile, width: 35 mm, height: 15 mm, similar to EN 60715, material: Aluminum, uncoated, length: 2000 mm, color: silver

DIN rail perforated - NS 35/15 ZN PERF 2000MM - 1206599



DIN rail perforated, Standard profile, width: 35 mm, height: 15 mm, similar to EN 60715, material: Steel, galvanized, length: 2000 mm, color: silver

DIN rail, unperforated - NS 35/15 ZN UNPERF 2000MM - 1206586



DIN rail, unperforated, Standard profile, width: 35 mm, height: 15 mm, similar to EN 60715, material: Steel, galvanized, length: 2000 mm, color: silver

Test disconnect terminal block - RTO 4-T-TC - 3000558

Accessories

DIN rail, unperforated - NS 35/15 CU UNPERF 2000MM - 1201895



DIN rail, unperforated, Standard profile, width: 35 mm, height: 15 mm, similar to EN 60715, material: Copper, uncoated, length: 2000 mm, color: copper-colored

---

End cap - NS 35/15 CAP - 1206573



DIN rail end piece, for DIN rail NS 35/15

DIN rail, unperforated - NS 35/15-2,3 UNPERF 2000MM - 1201798



DIN rail, unperforated, Standard profile 2.3 mm, width: 35 mm, height: 15 mm, acc. to EN 60715, material: Steel, galvanized, passivated with a thick layer, length: 2000 mm, color: silver

---

End block

End clamp - CLIPFIX 35 - 3022218



Quick mounting end clamp for NS 35/7,5 DIN rail or NS 35/15 DIN rail, with marking option, width: 9.5 mm, color: gray

---

End clamp - CLIPFIX 35-5 - 3022276



Quick mounting end clamp for NS 35/7,5 DIN rail or NS 35/15 DIN rail, with marking option, with parking option for FBS...5, FBS...6, KSS 5, KSS 6, width: 5.15 mm, color: gray

---

Test disconnect terminal block - RTO 4-T-TC - 3000558

Accessories

End clamp - E/NS 35 N - 0800886



End clamp, width: 9.5 mm, color: gray

End clamp - E/UK - 1201442



End clamp, width: 9.5 mm, height: 35.3 mm, material: PA, length: 50.5 mm, Mounting on a DIN rail NS 32 or NS 35, color: gray

End clamp - E/UK 1 - 1201413



End clamps, for supporting the ends of double-level and three-level terminal blocks, width: 10 mm, color: gray

End cover

End cover - D-RT 4-T - 3000606



End cover, length: 81.4 mm, width: 2.2 mm, height: 42.2 mm, color: gray

Insulating sleeve

Insulating sleeve - MPS-IH WH - 0201663

Insulating sleeve, color: white



Test disconnect terminal block - RTO 4-T-TC - 3000558

Accessories

Insulating sleeve - MPS-IH RD - 0201676

Insulating sleeve, color: red



Insulating sleeve - MPS-IH BU - 0201689

Insulating sleeve, color: blue



Insulating sleeve - MPS-IH YE - 0201692

Insulating sleeve, color: yellow



Insulating sleeve - MPS-IH GN - 0201702

Insulating sleeve, color: green



Insulating sleeve - MPS-IH GY - 0201728

Insulating sleeve, color: gray



Test disconnect terminal block - RTO 4-T-TC - 3000558

Accessories

Insulating sleeve - MPS-IH BK - 0201731



Insulating sleeve, color: black

Jumper

Plug-in bridge - FBS 2-6 - 3030336



Plug-in bridge, pitch: 6.2 mm, width: 10.7 mm, number of positions: 2, color: red

---

Plug-in bridge - FBS 3-6 - 3030242



Plug-in bridge, pitch: 6.2 mm, width: 16.9 mm, number of positions: 3, color: red

---

Plug-in bridge - FBS 4-6 - 3030255



Plug-in bridge, pitch: 6.2 mm, width: 23.1 mm, number of positions: 4, color: red

---

Plug-in bridge - FBS 5-6 - 3030349



Plug-in bridge, pitch: 6.2 mm, width: 29.3 mm, number of positions: 5, color: red

---

Test disconnect terminal block - RTO 4-T-TC - 3000558

Accessories

Plug-in bridge - FBS 6-6 - 1008238



Plug-in bridge, One side not fully isolated, pitch: 6.2 mm, width: 35.5 mm, number of positions: 6, color: red

---

Plug-in bridge - FBS 10-6 - 3030271



Plug-in bridge, pitch: 6.2 mm, width: 60.3 mm, number of positions: 10, color: red

---

Plug-in bridge - FBS 20-6 - 3030365



Plug-in bridge, pitch: 6.2 mm, width: 122.3 mm, number of positions: 20, color: red

---

Plug-in bridge - FBS 50-6 - 3032224



Plug-in bridge, pitch: 6.2 mm, width: 308.3 mm, number of positions: 50, color: red

---

Plug-in bridge - FBSR 2-6 - 3033715



Plug-in bridge, pitch: 6.2 mm, number of positions: 2, color: red

---

Test disconnect terminal block - RTO 4-T-TC - 3000558

Accessories

Plug-in bridge - FBSR 3-6 - 3001594



Plug-in bridge, pitch: 6.2 mm, number of positions: 3, color: red

Plug-in bridge - FBSR 4-6 - 3001595



Plug-in bridge, pitch: 6.2 mm, number of positions: 4, color: red

Plug-in bridge - FBSR 5-6 - 3001596



Plug-in bridge, pitch: 6.2 mm, number of positions: 5, color: red

Plug-in bridge - FBSR 10-6 - 3033716



Plug-in bridge, pitch: 6.2 mm, number of positions: 10, color: red

Plug-in bridge - FBS 2-6 BU - 3036932



Plug-in bridge, pitch: 6.2 mm, width: 10.7 mm, number of positions: 2, color: blue

Test disconnect terminal block - RTO 4-T-TC - 3000558

Accessories

Plug-in bridge - FBS 3-6 BU - 3036945



Plug-in bridge, pitch: 6.2 mm, width: 16.9 mm, number of positions: 3, color: blue

---

Plug-in bridge - FBS 4-6 BU - 3036958



Plug-in bridge, pitch: 6.2 mm, width: 23.1 mm, number of positions: 4, color: blue

---

Plug-in bridge - FBS 5-6 BU - 3036961



Plug-in bridge, pitch: 6.2 mm, width: 29.3 mm, number of positions: 5, color: blue

---

Plug-in bridge - FBS 10-6 BU - 3032198



Plug-in bridge, pitch: 6.2 mm, width: 60.3 mm, number of positions: 10, color: blue

---

Plug-in bridge - FBS 20-6 BU - 3032208



Plug-in bridge, pitch: 6.2 mm, width: 122.3 mm, number of positions: 20, color: blue

---

Test disconnect terminal block - RTO 4-T-TC - 3000558

Accessories

Plug-in bridge - FBS 50-6 BU - 3032211



Plug-in bridge, pitch: 6.2 mm, width: 308.3 mm, number of positions: 50, color: blue

---

Labeled terminal marker

Zack marker strip - ZB 8 CUS - 0825011



Zack marker strip, can be ordered: Strip, white, labeled according to customer specifications, mounting type: snap into tall marker groove, for terminal block width: 8.2 mm, lettering field size: 10.5 x 8.15 mm, Number of individual labels: 10

Marker for terminal blocks - UC-TM 8 CUS - 0824597



Marker for terminal blocks, can be ordered: by sheet, white, labeled according to customer specifications, mounting type: snap into tall marker groove, for terminal block width: 8.2 mm, lettering field size: 7.6 x 10.5 mm, Number of individual labels: 56

Marker for terminal blocks - UCT-TM 8 CUS - 0829616



Marker for terminal blocks, can be ordered: by sheet, white, labeled according to customer specifications, mounting type: snap into tall marker groove, for terminal block width: 8.2 mm, lettering field size: 7.6 x 10.5 mm, Number of individual labels: 42

Zack marker strip - ZB 8,LGS:FORTL.ZAHLEN - 1052015



Zack marker strip, Strip, white, labeled, can be labeled with: CMS-P1-PLOTTER, printed horizontally: consecutive numbers 1 ... 10, 11 ... 20, etc. up to 91 ... 100, mounting type: snap into tall marker groove, for terminal block width: 8.2 mm, lettering field size: 10.5 x 8.15 mm, Number of individual labels: 10

Test disconnect terminal block - RTO 4-T-TC - 3000558

Accessories

Zack marker strip - ZB 8,QR:FORTL.ZAHLEN - 1052028



Zack marker strip, Strip, white, labeled, can be labeled with: CMS-P1-PLOTTER, Printed vertically: consecutive numbers 1 ... 10, 11 ... 20, etc. up to 91 ... 100, mounting type: snap into tall marker groove, for terminal block width: 8.2 mm, lettering field size: 10.5 x 8.15 mm, Number of individual labels: 10

Marker for terminal blocks - ZB 8,LGS:L1-N,PE - 1052413



Marker for terminal blocks, Strip, white, labeled, can be labeled with: CMS-P1-PLOTTER, horizontal: L1, L2, L3, N, PE, L1, L2, L3, N, PE, mounting type: snap into tall marker groove, for terminal block width: 8.2 mm, lettering field size: 10.5 x 8.15 mm, Number of individual labels: 10

Partition plate

Partition plate - TPNS-UK - 0706647



Partition plate, length: 80 mm, width: 2 mm, height: 70 mm, color: gray

Separating plate - TS-UT 6-T/SP - 3072821



Separating plate, length: 105.2 mm, width: 1 mm, height: 67.5 mm, color: gray

Protective cap

Path extension - BE-RT 3/5 - 3049819



Path extension, color: gray

Short-circuit connector

Test disconnect terminal block - RTO 4-T-TC - 3000558

Accessories

Short-circuit connector - FBSRH 2-6 - 3033812



Short-circuit connector, pitch: 6.2 mm, number of positions: 2, color: red

---

Socket spanner

Tool - SHN 5.5 - 1209855



Socket wrench, wrench size 5.5 mm

Switching jumper

Switching jumper - SB-ME 2-6 - 3035755



Switching jumper, pitch: 6.2 mm, length: 21.2 mm, width: 12.3 mm, number of positions: 2, color: gray/orange

---

Terminal marking

Zack marker strip - ZB 8:UNBEDRUCKT - 1052002



Zack marker strip, Strip, white, unlabeled, can be labeled with: CMS-P1-PLOTTER, PLOTMARK, mounting type: snap into tall marker groove, for terminal block width: 8.2 mm, lettering field size: 10.5 x 8.15 mm, Number of individual labels: 10

Marker for terminal blocks - UC-TM 8 - 0818072



Marker for terminal blocks, Sheet, white, unlabeled, can be labeled with: BLUEMARK ID COLOR, BLUEMARK ID, BLUEMARK CLED, PLOTMARK, CMS-P1-PLOTTER, mounting type: snap into tall marker groove, for terminal block width: 8.2 mm, lettering field size: 7.6 x 10.5 mm, Number of individual labels: 56

Test disconnect terminal block - RTO 4-T-TC - 3000558

Accessories

Marker for terminal blocks - UCT-TM 8 - 0828740



Marker for terminal blocks, Sheet, white, unlabeled, can be labeled with: TOPMARK NEO, TOPMARK LASER, BLUEMARK ID COLOR, BLUEMARK ID, BLUEMARK CLED, THERMOMARK PRIME, THERMOMARK CARD 2.0, THERMOMARK CARD, mounting type: snap into tall marker groove, for terminal block width: 8.2 mm, lettering field size: 7.6 x 10.5 mm, Number of individual labels: 42

Test plug terminal block

Test plugs - MPS-MT - 0201744



Test plugs, with solder connection up to 1 mm² conductor cross section, color: gray

Test plugs - PS-6 - 3030996



Test plugs, Modular test plug, color: red

Test plugs - PS-6/2,3MM RD - 3038736



Test plugs, color: red

Test socket

Test adapter - PAI-4-N GY - 3032871



4 mm test adapter, for terminal blocks with 5.2 mm, 6.2 mm and 8.2 mm pitch

Phoenix Contact 2020 © - all rights reserved
http://www.phoenixcontact.com

PHOENIX CONTACT GmbH & Co. KG
Flachsmarktstr. 8
32825 Blomberg
Germany
Tel. +49 5235 300
Fax +49 5235 3 41200
http://www.phoenixcontact.com