THIS DRAWING IS UNPUBLISHED. RELEASED FOR PUBLICATION 20
© COPYRIGHT 20 BY TYCO ELECTRONICS CORPORATION. ALL RIGHTS RESERVED.

SET UP GAUGE 2119599-2 | LOC A | DIST 66

REVISIONS

P	LTR	DESCRIPTION	DATE	DWN	APVD
	B1	ECR-15-011833	10AUG2015	MR	JDG
	B2	ECR-15-012752	01SEP2015	JH	CT
	C	ECR-15-014379	30SEP2015	KH	TE
	C1	ECR-16-013312	19SEP2016	KH	LZ

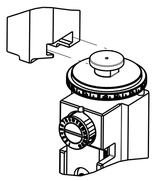

ATLANTIC VERSION TERMINATOR INTERFACE ADAPTER PART NUMBER	REVISION	DESCRIPTION	FEED TYPE
2150034-1	C	FINE CRIMP HEIGHT ADJUST	MECHANICAL
2150034-2	C	FINE CRIMP HEIGHT ADJUST	PNEUMATIC
2150034-5	C	FINE CRIMP HEIGHT ADJUST	SERVO LATCH PLATE 4
2150034-6	C	NON-CRIMP HEIGHT ADJUST	SERVO 4 LATCH PLATE 12
2150034-7	C	FINE CRIMP HEIGHT ADJUST	NONE
7-2150034-7	A	CRIMP TOOLING KIT	-

APPLICATOR STYLE CONVERSION CHART

CONVERT TO	PART NUMBERS REQUIRED					
PNEUMATIC FEED	2119950-1	2119792-1	-	2119641-1	-	2063440-1
SERVO LATCH PLATE	2119951-1	1901697-1	8-2150034-5	-	-	2168400-7 (QUANTITY 2)
SMART APPLICATOR	2161326-1	-	8-2150034-4	-	-	-
MECHANICAL FEED	2119949-1	2063961-1	5-18022-5	2119653-1	-	-
SERVO LATCH PLATE	2119951-1	1901697-1	8-2150034-5	-	-	2168400-7 (QUANTITY 2)
SMART APPLICATOR	2161326-1	-	8-2150034-4	-	-	-
MECHANICAL FEED	2119949-1	2063961-1	5-18022-5	2119653-1	-	-
PNEUMATIC FEED	2119950-1	2119792-1	-	2119641-1	-	2063440-1
-	-	-	-	-	-	-
-	-	-	-	-	-	-
-	-	-	-	-	-	-
-	-	-	-	-	-	-

APPLICATOR DATA

CRIMP	SIZE	TYPE
WIRE	2.79 mm [.110]	F
INSUL	4.57 mm [.180]	F

APPL INSTRUCTIONS 408-10390

TERMINAL DATA: TE TERMINAL — TE CRIMP SPECIFICATION

TERMINAL NAME: 250 SERIES RECEPTACLE WITH LATCH

WIRE STRIP LENGTH	INSULATION DIAMETER RANGE
5.20-5.90 mm [.205-.232 IN]	∅2.16-3.43 mm [.085-.135 IN]
114-5052	-
-	-
-	-

TERMINALS APPLIED

TE TERMINAL	TE TERMINAL	TE TERMINAL	TE TERMINAL
170032-1	170032-2	170032-5	170342-1
170342-2	170031-1	170031-2	170031-3
170031-5	1-170031-1	1-170031-2	2-170031-1
2-170031-2	4-170031-2		

TERMINAL DATA: TE TERMINAL — TE CRIMP SPECIFICATION

TERMINAL NAME: 250 SERIES RECEPTACLE WITH LATCH

WIRE STRIP LENGTH	INSULATION DIAMETER RANGE
5.20-5.90 mm [.205-.232 IN]	∅2.16-3.43 mm [.085-.135 IN]
13	-
-	-
-	-

TERMINALS APPLIED

TE TERMINAL	TE TERMINAL	TE TERMINAL	TE TERMINAL
170342-1	170342-2		

WIRE SIZE	CRIMP HEIGHT mm [INCH]	CRIMP HEIGHT REFERENCE SETTING 9
2.00mm2	1.45+/-0.05 [.057+/-.002]	3.3
1.25mm2	1.35+/-0.05 [.053+/-.002]	6.3
0.85mm2	1.19+/-0.05 [.047+/-.002]	7.1
0.50mm2	1.12+/-0.05 [.044+/-.002]	8.9

WIRE SIZE	CRIMP HEIGHT mm [INCH]	CRIMP HEIGHT REFERENCE SETTING
1.50mm2	1.35+/-0.05 [.053+/-.002]	6.3

1. RECOMMENDED SPARE PARTS
2. GREASE BEARING SURFACES LIGHTLY
3. LUBRICATE DAILY PER THE APPLICATOR INSTRUCTION SHEET SUPPLIED WITH THE APPLICATOR.
4. APPLICATOR SPECIFIC DATA TO BE ENTERED INTO BLANK MEMORY CHIP AT ASSEMBLY. SEE BELOW FOR PART NUMBER:
   - MECHANICAL FEED WITH "SMART APPLICATOR" CONVERSION: 8-2150034-4
   - PNEUMATIC FEED WITH "SMART APPLICATOR" CONVERSION: 8-2150034-4
   - SERVO FEED WITH "FINE CRIMP HEIGHT ADJUST": 8-2150034-5
   - SERVO FEED WITH "NON-CRIMP HEIGHT ADJUST": 8-2150034-6
5. ADJUSTMENT OF THE STRIPPER MAY BE REQUIRED WHEN MOVING THE APPLICATOR BETWEEN BENCH AND LEADMAKER APPLICATIONS.
6. APPLY PART NUMBER 1-23419-5 LOCTITE TO THREADS OF ITEMS 50, 62 APPLY PART NUMBER 2-23419-6 LOCTITE TO THREADS OF ITEMS 242. FOR -6 ONLY APPLY PART NUMBER 1-23419-5 LOCTITE TO THREADS OF ITEM 37.
7. GREASE THREADS, GROOVE AND O-RING ON ITEMS 35 & 252.
8. MAGNET, ITEM 166 MUST BE ORIENTED CORRECTLY IN ORDER TO PROPERLY ACTUATE THE COUNTER.
9. CRIMP HEIGHT REFERENCE SETTING WAS THE SETTING USED WHEN THE APPLICATOR WAS QUALIFIED AT THE FACTORY. ADJUSTMENT MAY BE NECESSARY WHEN RUNNING APPLICATOR IN THE FIELD.
10. SPARE FEED CAM STORAGE LOCATION REFER TO INSTRUCTION SHEET FOR ADDITIONAL INFORMATION.
11. THE RECOMMENDED SET-UP FOR END FEED APPLICATORS IS POST-FEED WITH ITEM 2119653-1. THE APPLICATOR CAN BE CONFIGURED FOR PRE-FEED WITH ITEM 2119652-1 BUT MAY ENCOUNTER PROBLEMS WITH SOME APPLICATIONS. FEED ISSUES OR TERMINAL JAMMING MAY OCCUR IN THE PRE-FEED CONFIGURATION.
12. WHEN ASSEMBLING -6 NON-CRIMP HEIGHT ADJUST APPLICATOR USE SHIM PACK 2119957-2 TO ALIGN APPLICATOR'S MAXIMUM WIRE CRIMP HEIGHT AT NORMAL TERMINATOR SHUT HEIGHT

*WARNING
ON INSTALLATION, SET WIRE DISC, ITEM 40 TO LARGEST WIRE SIZE SETTING. USE OF SETTINGS BELOW MINIMUM REQUIRED CRIMP HEIGHT SETTING WILL CAUSE DAMAGE TO CRIMP TOOLING.

13. THIS CRIMP PARAMETER IS PROVIDED TO MEET A CUSTOM AND UNIQUE CUSTOMER REQUIREMENT. IT HAS BEEN EVALUATED AND IS CONDITIONALLY SPECIFIED BY TE CONNECTIVITY. THIS CUSTOMIZED CRIMP PARAMETER IS NOT LISTED AS AN APPROVED APPLICATION WITHIN A TE CONNECTIVITY APPLICATION SPECIFICATION; HOWEVER, IT HAS BEEN VALIDATED ACCORDING TO TE CONNECTIVITY SPECIFICATIONS 109-18079(TEST GROUP 1) AND 114-18022. **TE CONNECTIVITY EXPRESSLY DISCLAIMS ANY AND ALL WARRANTIES THAT THE PRODUCT WILL PERFORM SIMILARLY TO VALIDATED AND APPROVED APPLICATIONS, AS STATED WITHIN TE CONNECTIVITY APPLICATION SPECIFICATIONS, INCLUDING BUT NOT LIMITED TO IMPLIED WARRANTIES OF MERCHANTABILITY OR FITNESS FOR PARTICULAR PURPOSE.** AS SUCH, IT IS HIGHLY RECOMMENDED THAT THE CUSTOMER PERFORM FURTHER DETAILED EVALUATION TO ASSESS PRODUCT PERFORMANCE IN THE SPECIFIC APPLICATION.

-77	-7	-6	-5	-2	-1	PART NO	DESCRIPTION	ITEM NO
-	-	1	-	-	-	2119957-2	APPLICATOR SHIM PACK	260
-	1	-	1	1	1	8-21084-0	O-RING, .676 ID, .070 DIA. MAT.	252
-	-	-	-	1	-	2119640-1	PUSH ROD, AIR FEED	250
-	-	-	-	1	-	2079988-1	BUSHING, LCH5-12, MISUMI	249
-	-	-	-	1	-	2119641-1	FEED CAM, AIR FEED	248
-	1	-	1	1	1	2119798-1	DETENT PIN	247
-77	-7	-6	-5	-2	-1	PART NO	DESCRIPTION	ITEM NO
-	1	-	1	1	1	1-22279-3	SPRING, COMPRESSION	246
-	-	1	-	-	-	2119759-1	RAM, AMP STYLE, END FEED, NON-ADJUST	245
-	1	1	1	1	1	2119082-9	CAM, SNAIL, INSULATION ADJUSTMENT	244
-	1	1	1	1	1	2079764-1	WASHER, WAVE SPRING, CREST-TO-CREST	243
6 -	1	1	1	1	1	2119083-1	RETAINER, INSULATION DIAL	242
-	-	2	2	-	-	2168400-7	SHCS, LOW HEAD, RoHS, M5 X 10	240
-	-	-	-	-	1	2119580-1	MECHANICAL FEED ASSEMBLY	239
-	-	-	-	1	-	2063440-1	AIR FEED MODULE	238
-	-	1	1	-	-	2119740-2	TAG,IDENTIFICATION	213
-	-	REF	REF	-	-	1901697-1	FEED FINGER ASSEMBLY,EF	183
-	1	1	1	1	1	6-993111-6	PIN, SLOTTED SPRING 3.0 X 14.0	177
-	1	1	1	1	1	8-22280-7	SPRING, COMPRESSION	176
-	1	1	1	1	1	1752353-2	GUIDE PIN,HOLDDOWN	175
-	1	1	1	1	1	1901680-2	GUIDE PIN,HOLDDOWN	174
-	-	-	-	2	-	21045-3	RING, RETAIN, EXTERN, 3/16 CRESCENT	172
8 -	1	1	1	1	1	994969-1	MAGNET, RARE EARTH HIGH ENERGY	166
-	REF	REF	REF	REF	REF	994970-2	COUNTER, MAGNETIC	164
-	-	-	-	1	-	240638-1	SPRING, FEED FINGER	163
-	-	-	-	1	-	3-23627-7	PIN, RETAIN, GRVD, 3/16 X .854	137
-	-	REF	REF	-	-	SEE NOTE 4	MEMORY CHIP, PROGRAMMED	135
-	-	1	1	-	-	1633743-1	SERVO FEED LATCH ASM	133
-	1	1	1	1	1	455888-4	SPACER, CRIMPER	82
-	1	1	1	1	1	2119956-2	DOCUMENTATION PACKAGE	71
-	2	2	2	2	2	2-18032-2	SCR, SET, FLT POINT M3 X 10.0	70
-	1	-	-	1	1	2119740-1	TAG,IDENTIFICATION	67
-	2	2	2	2	2	2168078-1	SCREW, DRIVE, RH, RoHS, 2 x .188	66
-	1	1	1	1	1	1901681-1	HOLDDOWN, TERMINAL	65
-	1	-	1	1	1	2119793-1	LIMITER, ADJUSTMENT BOLT	63
6 -	2	-	2	2	2	992763-5	SCR, SET, SOC, CONE POINT, M3 x 4.0	62
-	1	1	1	1	1	2079383-4	SCR, BHSC, RoHS (M4 X 8)	60
-	-	-	-	-	1	5-18022-5	SCR, HEX HD CAP, M4 X 6.0	59
-	-	-	-	-	1	2063961-1	FEED FINGER	58
-	4	4	4	4	4	2168400-4	SHCS, LOW HEAD, RoHS, M4 X 8	57
-	2	2	2	2	2	2168083-3	SCR, SKT HD CAP, RoHS, M4 X 12.0	56
-	2	2	2	2	2	5018030-2	NUT, HEX, REG, RoHS, M4	55
-	2	2	2	2	2	5018030-1	NUT, HEX, REG, RoHS, M3	54
-	2	2	2	2	2	986965-8	NUT, LOCK, HEX, TORQUE (M4)	53
-	1	1	1	1	1	1-5018030-0	NUT, HEX, REG, RoHS, M3.5	52
-	-	-	-	1	-	2119792-2	PAWL, EF, AIR	51
6 -	1	1	1	1	1	1-1752354-0	STANDOFF,HOLD-DOWN	50
-	-	-	-	1	2	18023-9	SCR, SKT HD CAP M4 X 6.0	49
-	-	-	-	-	1	2119652-1	FEED CAM, PRE FEED	48
-	-	-	-	-	1	2119653-1	FEED CAM, POST FEED	47
-	1	1	1	1	1	2119655-5	APPLICATOR BASIC ASSEMBLY, EF	46
-	1	-	1	1	1	2119369-1	RAM,AMP STYLE, END FEED	44
-	1	1	1	1	1	2079383-7	SCR, BHSC, RoHS (M8 X 25)	41
-	1	-	1	1	1	2119645-1	DISC, NUMBERED FA WIRE ADJUSTMENT	40
-	1	-	1	1	1	2119957-1	APPLICATOR SHIM PACK	39
-	1	1	1	1	1	2119644-1	RAM WASHER, PRECISION	38
6 -	1	1	1	1	1	2119085-1	FA HEAD, ATLANTIC STYLE	37
7 -	1	-	1	1	1	2119092-1	BOLT, ADJUSTMENT	35
-	8	8	8	8	8	1-18028-2	WASHER, FLAT, REG M4	33
-	2	2	2	2	2	2168083-9	SCR, SKT HD CAP, RoHS, M4 X 20	31
-	2	2	2	2	2	1-2168083-0	SCR, SKT HD CAP, RoHS, M4 X 10	29
-	1	1	1	1	1	240639-1	STRIPPER (MACHINING)	27
-	2	2	2	2	2	1320906-1	STUD, THREADED	25
-	1	1	1	1	1	1752371-3	PLATE, STRIP GUIDE	24
-	2	2	2	2	2	2-22281-3	SPRING, COMPRESSION	22
-	1	1	1	1	1	1752373-1	DRAG	20
-	2	2	2	2	2	1901259-5	GUIDE, LOWER STRIP	18
-	4	4	4	4	4	1-2079383-1	SCR, BHSC, RoHS (M6 X 12)	17
-	1	1	1	1	1	3-240641-9	SPACER	16
-	1	1	1	1	1	1752360-1	SPACER,HOLD-DOWN	13
1 -	1	1	1	1	1	240833-2	PLATE, REAR SHEAR	11
-	-	-	-	-	-	-	-	10
1 -	1	1	1	1	1	690482-3	PLATE, FRONT SHEAR	9
1 1	1	1	1	1	1	1333219-2	ANVIL, COMBINATION	8
1 -	1	1	1	1	1	1-2217206-3	BLADE, SLUG	7
-	1	1	1	1	1	1-240641-2	SPACER	5
-	1	1	1	1	1	238009-1	BLOCK, FL CRIMPER SPACER	4
1 1	1	1	1	1	1	2119582-3	CRIMPER, INSULATION F PREMIUM	3
-	1	1	1	1	1	455888-8	SPACER, CRIMPER	2
1 1	1	1	1	1	1	2-456408-9	CRIMPER, WIRE PREMIUM	1
-77	-7	-6	-5	-2	-1	PART NO	DESCRIPTION	ITEM NO

ATLANTIC VERSION

Shown on sheets 1 of 4 & 2 of 4
(Pacific version shown on sheets 3 of 4 & 4 of 4)

THIS DRAWING IS A CONTROLLED DOCUMENT FOR TYCO ELECTRONICS CORPORATION. IT IS SUBJECT TO CHANGE AND TO CONTROL BY ENGINEERING ORGANIZATION. SHOULD BE CONTACTED FOR THE LATEST REVISION.

DIMENSIONS: mm

TOLERANCES UNLESS OTHERWISE SPECIFIED:
0 PLC ±
1 PLC ±
2 PLC ±
3 PLC ±
4 PLC ±
ANGLES ±

MATERIAL -
FINISH -

DWN	C.CHEN	09JAN2012
CHK	S.XI	09JAN2012
APVD	L.CRUZ	09JAN2012

PRODUCT SPEC -
APPLICATION SPEC -
WEIGHT -

TE Connectivity
Harrisburg, PA 17105-3608

NAME: Ocean End Feed Applicator -

SIZE	CAGE CODE	DRAWING NO	RESTRICTED TO
A1	00779	C-2150034	-

Customer Accessible Production Drawing | SCALE 1:1 | SHEET 1 OF 4 | REV C1

SHEETS 3 & 4 ARE NOT REQUIRED FOR ATLANTIC VERSION

THIS DRAWING IS UNPUBLISHED. RELEASED FOR PUBLICATION 20
© COPYRIGHT 20 BY TYCO ELECTRONICS CORPORATION. ALL RIGHTS RESERVED.

LOC	DIST
A	66

REVISIONS

P	LTR	DESCRIPTION	DATE	DWN	APVD
	-	SEE SHEET 1	-	-	-

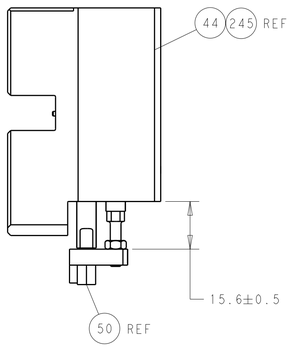

HOLDDOWN SET-UP

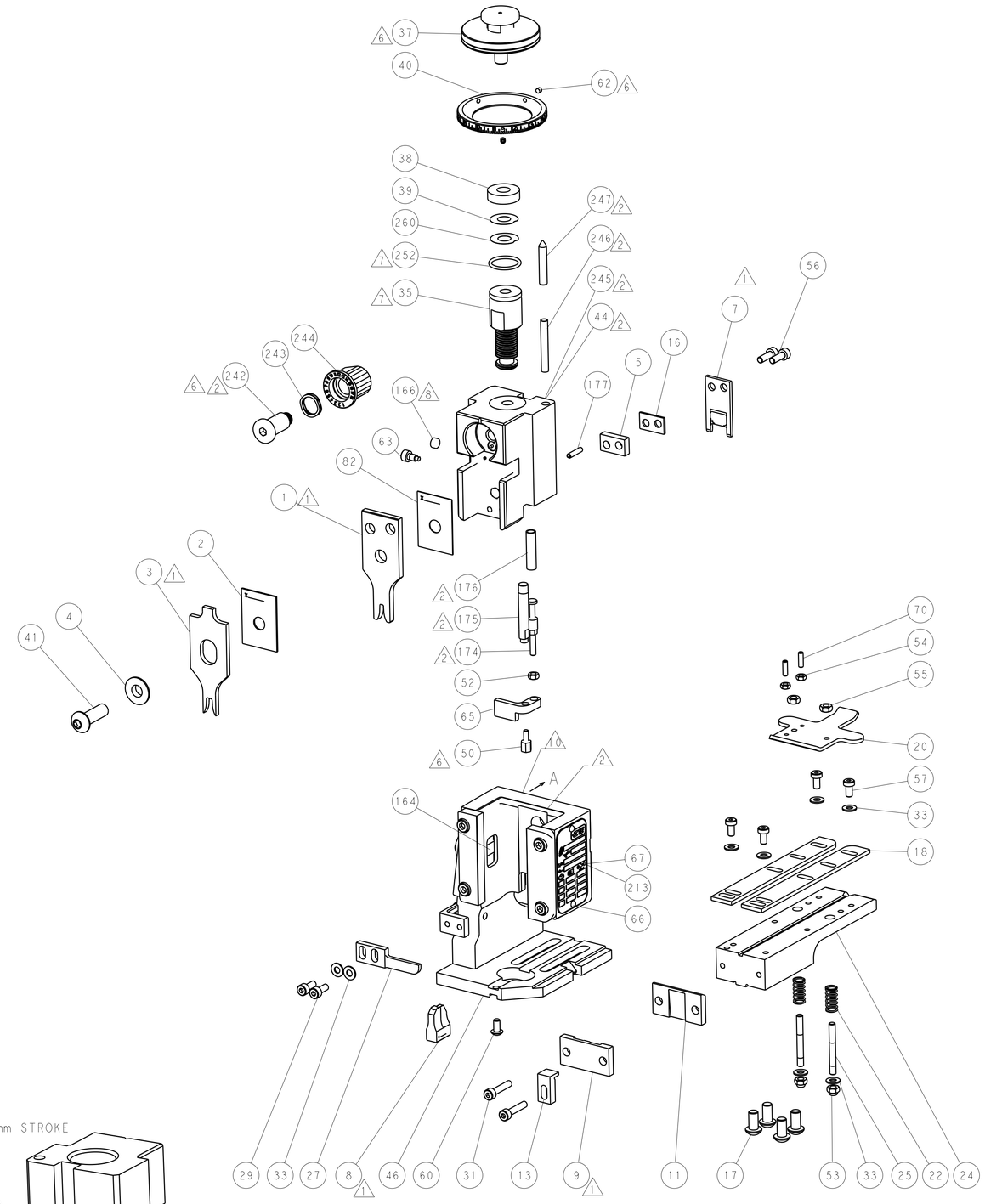

FEED TYPE MECHANICAL

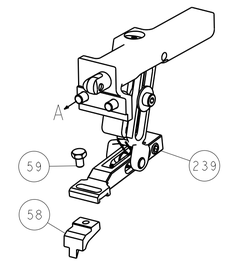

PNEUMATIC

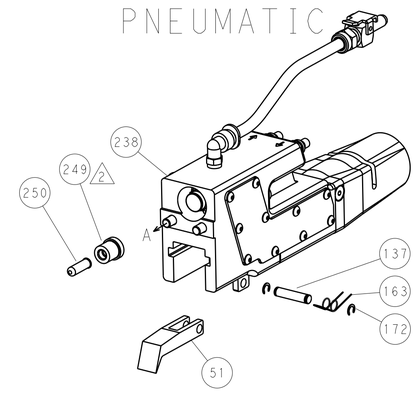

SERVO LATCH PLATE

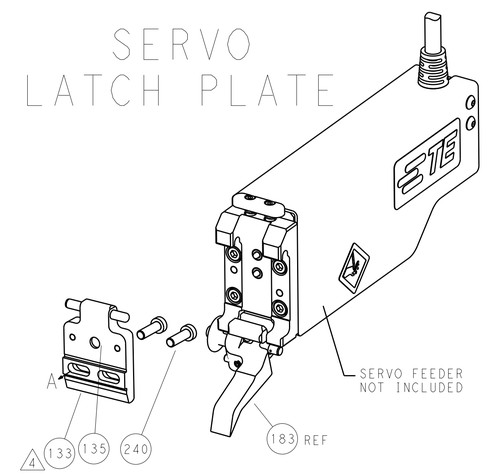

CAM POSITIONS

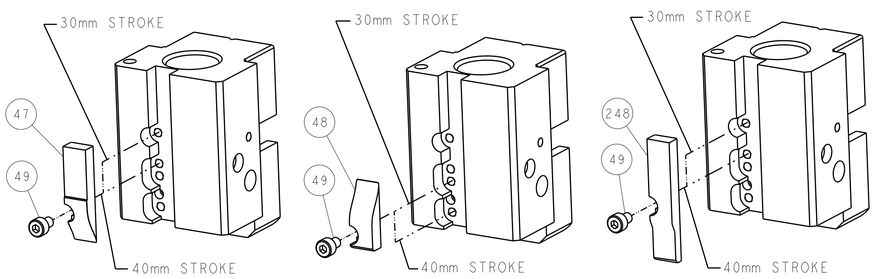

ATLANTIC VERSION
Shown on sheets 1 of 4 & 2 of 4
(Pacific version shown on sheets 3 of 4 & 4 of 4)

THIS DRAWING IS A CONTROLLED DOCUMENT FOR TYCO ELECTRONICS CORPORATION. IT IS SUBJECT TO CHANGE AND THE CONTROLLING ENGINEERING ORGANIZATION SHOULD BE CONTACTED FOR THE LATEST REVISION.

DIMENSIONS: mm

TOLERANCES UNLESS OTHERWISE SPECIFIED:
0 PLC ±
1 PLC ±
2 PLC ±
3 PLC ±
4 PLC ±
ANGLES ±

MATERIAL - -
FINISH - -

DWN	C.CHEN	09JAN2012
CHK	S.XI	09JAN2012
APVD	L.CRUZ	09JAN2012
PRODUCT SPEC	-	
APPLICATION SPEC	-	
WEIGHT	-	

TE Connectivity
Harrisburg, PA 17105-3608

NAME: Ocean End Feed Applicator -

SIZE	CAGE CODE	DRAWING NO	RESTRICTED TO
A1	00779	C-2150034	-

Customer Accessible Production Drawing | SCALE 1:1 | SHEET 2 OF 4 | REV C1

AMP 4805 REV 31MAR2000

SHEETS 3 & 4 ARE NOT REQUIRED FOR ATLANTIC VERSION

THIS DRAWING IS UNPUBLISHED. RELEASED FOR PUBLICATION 20
© COPYRIGHT 20 BY TYCO ELECTRONICS CORPORATION. ALL RIGHTS RESERVED.

SET UP GAUGE 2119599-2 | LOC A | DIST 66

REVISIONS

P	LTR	DESCRIPTION	DATE	DWN	APVD
	-	SEE SHEET 1	-	-	-

PACIFIC VERSION TERMINATOR INTERFACE ADAPTER	PART NUMBER	REVISION	DESCRIPTION	FEED TYPE
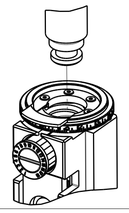	2-2150034-1	C	FINE CRIMP HEIGHT ADJUST	MECHANICAL
	2-2150034-2	C	FINE CRIMP HEIGHT ADJUST	PNEUMATIC
	2-2150034-5	C	FINE CRIMP HEIGHT ADJUST	SERVO LATCH PLATE 4
	2-2150034-7	C	FINE CRIMP HEIGHT ADJUST	NONE
	7-2150034-7	A	CRIMP TOOLING KIT	-

APPLICATOR STYLE CONVERSION CHART

CONVERT TO	PART NUMBERS REQUIRED					
PNEUMATIC FEED	2119950-1	2119792-1	-	2119641-2	-	2063440-1
SERVO LATCH PLATE	2119951-1	1901697-1	8-2150034-5	-	-	2168400-7 (QUANTITY 2)
SMART APPLICATOR	2161326-1	-	8-2150034-4	-	-	-
MECHANICAL FEED	2119949-1	2063961-1	5-18022-5	2119653-2	-	-
SERVO LATCH PLATE	2119951-1	1901697-1	8-2150034-5	-	-	2168400-7 (QUANTITY 2)
SMART APPLICATOR	2161326-1	-	8-2150034-4	-	-	-
MECHANICAL FEED	2119949-1	2063961-1	5-18022-5	2119653-2	-	-
PNEUMATIC FEED	2119950-1	2119792-1	-	2119641-2	-	2063440-1
-	-	-	-	-	-	-
-	-	-	-	-	-	-

APPLICATOR DATA		
CRIMP	SIZE	TYPE
WIRE	2.79 mm [.110]	F
INSUL	4.57 mm [.180]	F
APPL INSTRUCTIONS 408-10390		

TERMINAL DATA: TE TERMINAL		TE CRIMP SPECIFICATION
TERMINAL NAME: 250 SERIES RECEPTACLE WITH LATCH		
WIRE STRIP LENGTH 5.20-5.90 mm [.205-.232 IN]	INSULATION DIAMETER RANGE Ø2.16-3.43 mm [.085-.135 IN]	
TERMINAL APPLICATION SPECIFICATION	114-5052	- / -
	-	- / -

TERMINALS APPLIED

TE TERMINAL	TE TERMINAL	TE TERMINAL	TE TERMINAL
170032-1	170032-2	170032-5	170342-1
170342-2	170031-1	170031-2	170031-3
170031-5	1-170031-1	1-170031-2	2-170031-1
2-170031-2	4-170031-2		

TERMINAL DATA: TE TERMINAL		TE CRIMP SPECIFICATION
TERMINAL NAME: 250 SERIES RECEPTACLE WITH LATCH		
WIRE STRIP LENGTH 5.20-5.90 mm [.205-.232 IN]	INSULATION DIAMETER RANGE Ø2.16-3.43 mm [.085-.135 IN]	
TERMINAL APPLICATION SPECIFICATION	12	- / -
	-	- / -

TERMINALS APPLIED

TE TERMINAL	TE TERMINAL	TE TERMINAL	TE TERMINAL
170342-1	170342-2		

WIRE SIZE	CRIMP HEIGHT mm [INCH]	CRIMP HEIGHT REFERENCE SETTING 9
2.00mm2	1.45+/-0.05 [.057+/-.002]	3.3
1.25mm2	1.35+/-0.05 [.053+/-.002]	6.3
0.85mm2	1.19+/-0.05 [.047+/-.002]	7.1
0.50mm2	1.12+/-0.05 [.044+/-.002]	8.9

WIRE SIZE	CRIMP HEIGHT mm [INCH]	CRIMP HEIGHT REFERENCE SETTING
1.50mm2	1.35+/-0.05 [.053+/-.002]	6.3

*WARNING
ON INSTALLATION, SET WIRE DISC, ITEM 40 TO LARGEST WIRE SIZE SETTING. USE OF SETTINGS BELOW MINIMUM REQUIRED CRIMP HEIGHT SETTING WILL CAUSE DAMAGE TO CRIMP TOOLING.

1. RECOMMENDED SPARE PARTS

2. GREASE BEARING SURFACES LIGHTLY

3. LUBRICATE DAILY PER THE APPLICATOR INSTRUCTION SHEET SUPPLIED WITH THE APPLICATOR.

4. APPLICATOR SPECIFIC DATA TO BE ENTERED INTO BLANK MEMORY CHIP AT ASSEMBLY. SEE BELOW FOR PART NUMBER:
   MECHANICAL FEED WITH "SMART APPLICATOR" CONVERSION: 8-2150034-4
   PNEUMATIC FEED WITH "SMART APPLICATOR" CONVERSION: 8-2150034-4
   SERVO FEED WITH "FINE CRIMP HEIGHT ADJUST": 8-2150034-5

5. ADJUSTMENT OF THE STRIPPER MAY BE REQUIRED WHEN MOVING THE APPLICATOR BETWEEN BENCH AND LEADMAKER APPLICATIONS.

6. APPLY PART NUMBER 1-23419-5 LOCTITE TO THREADS OF ITEMS 50,62
   APPLY PART NUMBER 2-23419-6 LOCTITE TO THREADS OF ITEMS 242.

7. GREASE THREADS, GROOVE AND O-RING ON ITEMS 139 & 153.

8. MAGNET, ITEM 166 MUST BE ORIENTED CORRECTLY IN ORDER TO PROPERLY ACTUATE THE COUNTER.

9. CRIMP HEIGHT REFERENCE SETTING WAS THE SETTING USED WHEN THE APPLICATOR WAS QUALIFIED AT THE FACTORY. ADJUSTMENT MAY BE NECESSARY WHEN RUNNING APPLICATOR IN THE FIELD.

10. SPARE FEED CAM STORAGE LOCATION REFER TO INSTRUCTION SHEET FOR ADDITIONAL INFORMATION.

11. THE RECOMMENDED SET-UP FOR END FEED APPLICATORS IS POST-FEED WITH ITEM 2119653-1. THE APPLICATOR CAN BE CONFIGURED FOR PRE-FEED WITH ITEM 2119652-1 BUT MAY ENCOUNTER PROBLEMS WITH SOME APPLICATIONS. FEED ISSUES OR TERMINAL JAMMING MAY OCCUR IN THE PRE-FEED CONFIGURATION.

12. THIS CRIMP PARAMETER IS PROVIDED TO MEET A CUSTOM AND UNIQUE CUSTOMER REQUIREMENT. IT HAS BEEN EVALUATED AND IS CONDITIONALLY SPECIFIED BY TE CONNECTIVITY. THIS CUSTOMIZED CRIMP PARAMETER IS NOT LISTED AS AN APPROVED APPLICATION WITHIN A TE CONNECTIVITY APPLICATION SPECIFICATION; HOWEVER, IT HAS BEEN VALIDATED ACCORDING TO TE CONNECTIVITY SPECIFICATIONS 109-18079(TEST GROUP 1) AND 114-18022. **TE CONNECTIVITY EXPRESSLY DISCLAIMS ANY AND ALL WARRANTIES THAT THE PRODUCT WILL PERFORM SIMILARLY TO VALIDATED AND APPROVED APPLICATIONS, AS STATED WITHIN TE CONNECTIVITY APPLICATION SPECIFICATIONS, INCLUDING BUT NOT LIMITED TO IMPLIED WARRANTIES OF MERCHANTABILITY OR FITNESS FOR PARTICULAR PURPOSE.** AS SUCH, IT IS HIGHLY RECOMMENDED THAT THE CUSTOMER PERFORM FURTHER DETAILED EVALUATION TO ASSESS PRODUCT PERFORMANCE IN THE SPECIFIC APPLICATION.

-	1	1	1	1	2119782-1	FINE ADJUST HEAD ASM, PACIFIC STYLE	251
-	-	-	1	-	2119640-1	PUSH ROD, AIR FEED	250
-	-	-	1	-	2079988-1	BUSHING, LCH5-12, MISUMI	249
-	1	1	1	1	1-22279-3	SPRING, COMPRESSION	246
-77	-27	-25	-22	-21	PART NO	DESCRIPTION	ITEM NO

-	1	1	1	1	2119082-9	CAM, SNAIL, INSULATION ADJUSTMENT	244
-	1	1	1	1	2079764-1	WASHER, WAVE SPRING, CREST-TO-CREST	243
6 -	1	1	1	1	2119083-1	RETAINER, INSULATION DIAL	242
-	-	2	-	-	2168400-7	SHCS, LOW HEAD, RoHS, M5 X 10	240
-	-	-	-	1	2119580-1	MECHANICAL FEED ASSEMBLY	239
-	-	-	1	-	2063440-1	AIR FEED MODULE	238
-	-	1	-	-	2119740-2	TAG,IDENTIFICATION	213
-	4	4	4	4	2079383-9	SCR, BHSC, RoHS (M6 X 20)	186
-	-	REF	-	-	1901697-1	FEED FINGER ASSEMBLY,EF	183
-	1	1	1	1	6-993111-6	PIN, SLOTTED SPRING 3.0 X 14.0	177
-	1	1	1	1	8-22280-7	SPRING, COMPRESSION	176
-	1	1	1	1	1752353-2	GUIDE PIN,HOLDDOWN	175
-	1	1	1	1	1901680-2	GUIDE PIN,HOLDDOWN	174
-	-	-	2	-	21045-3	RING, RETAIN, EXTERN, 3/16 CRESCENT	172
8 -	1	1	1	1	994969-1	MAGNET, RARE EARTH HIGH ENERGY	166
-	REF	REF	REF	REF	994970-2	COUNTER, MAGNETIC	164
-	-	-	1	-	240638-1	SPRING, FEED FINGER	163
-	1	1	1	1	8-21084-1	O-RING, .801 ID, .070 DIA. MAT.	153
7 -	-	-	1	-	2119641-2	FEED CAM, AIR FEED	152
-	1	1	1	1	2119798-2	DETENT PIN	145
-	1	1	1	1	2079383-8	SCR, BHSC, RoHS (M4 X 16)	144
-	-	-	-	1	2119653-2	FEED CAM, POST FEED	142
-	1	1	1	1	2119655-6	APPLICATOR BASIC ASSEMBLY, EF	141
-	1	1	1	1	2119651-1	RAM, ASIAN STYLE, END FEED	140
7 -	1	1	1	1	2119092-2	BOLT, ADJUSTMENT	139
-	-	-	1	-	3-23627-7	PIN, RETAIN, GRVD, 3/16 X .854	137
-	-	REF	-	-	SEE NOTE 4	MEMORY CHIP, PROGRAMMED	135
-	-	1	-	-	1633743-1	SERVO FEED LATCH ASM	133
-	1	1	1	1	455888-4	SPACER, CRIMPER	82
-	1	1	1	1	2119956-2	DOCUMENTATION PACKAGE	71
-	2	2	2	2	2-18032-2	SCR, SET, FLT POINT M3 X 10.0	70
-	1	-	1	1	2119740-1	TAG,IDENTIFICATION	67
-	2	2	2	2	2168078-1	SCREW, DRIVE, RH, RoHS, 2 x .188	66
-	1	1	1	1	1901681-1	HOLDDOWN, TERMINAL	65
-	1	1	1	1	2119793-1	LIMITER, ADJUSTMENT BOLT	63
6 -	2	2	2	2	992763-5	SCR, SET, SOC, CONE POINT, M3 x 4.0	62
-	-	-	-	1	5-18022-5	SCR, HEX HD CAP, M4 X 6.0	59
-	-	-	-	1	2063961-1	FEED FINGER	58
-	4	4	4	4	2168400-4	SHCS, LOW HEAD, RoHS, M4 X 8	57
-	2	2	2	2	2168083-3	SCR, SKT HD CAP, RoHS, M4 X 12.0	56
-	2	2	2	2	5018030-2	NUT, HEX, REG, RoHS, M4	55
-	2	2	2	2	5018030-1	NUT, HEX, REG, RoHS, M3	54
-	2	2	2	2	986965-8	NUT, LOCK, HEX, TORQUE (M4)	53
-	1	1	1	1	1-5018030-0	NUT, HEX, REG, RoHS, M3.5	52
-	-	-	1	-	2119792-2	PAWL, EF, AIR	51
6 -	1	1	1	1	1-1752354-0	STANDOFF,HOLD-DOWN	50
-	-	-	1	2	18023-9	SCR, SKT HD CAP M4 X 6.0	49
-	-	-	-	1	2119652-1	FEED CAM, PRE FEED	48
-	1	1	1	1	2079383-7	SCR, BHSC, RoHS (M8 X 25)	41
-	1	1	1	1	2119645-1	DISC, NUMBERED FA WIRE ADJUSTMENT	40
-	1	1	1	1	2119957-1	APPLICATOR SHIM PACK	39
-	1	1	1	1	2119644-1	RAM WASHER, PRECISION	38
-	8	8	8	8	1-18028-2	WASHER, FLAT, REG M4	33
-	2	2	2	2	2168083-9	SCR, SKT HD CAP, RoHS, M4 X 20	31
-	2	2	2	2	1-2168083-0	SCR, SKT HD CAP, RoHS, M4 X 10	29
-	1	1	1	1	240639-1	STRIPPER (MACHINING)	27
-	2	2	2	2	1320906-1	STUD, THREADED	25
-	1	1	1	1	1752371-3	PLATE, STRIP GUIDE	24
-	2	2	2	2	2-22281-3	SPRING, COMPRESSION	22
-	1	1	1	1	1752373-1	DRAG	20
-	2	2	2	2	1901259-5	GUIDE, LOWER STRIP	18
-	1	1	1	1	3-240641-9	SPACER	16
-	1	1	1	1	1752360-1	SPACER,HOLD-DOWN	13
1 -	1	1	1	1	240833-2	PLATE, REAR SHEAR	11
-	-	-	-	-	-	-	10
1 -	1	1	1	1	690482-3	PLATE, FRONT SHEAR	9
1	1	1	1	1	1333219-2	ANVIL, COMBINATION	8
1 -	1	1	1	1	1-2217206-3	BLADE, SLUG	7
-	1	1	1	1	1-240641-2	SPACER	5
-	1	1	1	1	238009-1	BLOCK, FL CRIMPER SPACER	4
1 -	1	1	1	1	2119582-3	CRIMPER, INSULATION F PREMIUM	3
-	1	1	1	1	455888-8	SPACER, CRIMPER	2
1	1	1	1	1	2-456408-9	CRIMPER, WIRE PREMIUM	1
-77	-27	-25	-22	-21	PART NO	DESCRIPTION	ITEM NO

PACIFIC VERSION

Shown on sheets 3 of 4 & 4 of 4
(Atlantic version shown on sheets 1 of 4 & 2 of 4)

THIS DRAWING IS A CONTROLLED DOCUMENT FOR TYCO ELECTRONICS CORPORATION IT IS SUBJECT TO CHANGE AND THE CONTROLLING ENGINEERING ORGANIZATION SHOULD BE CONTACTED FOR THE LATEST REVISION.

DWN	C.CHEN	09JAN2012
CHK	S.XI	09JAN2012
APVD	J.CRUZ	09JAN2012

PRODUCT SPEC -
APPLICATION SPEC -
WEIGHT -

DIMENSIONS: mm

TOLERANCES UNLESS OTHERWISE SPECIFIED:
0 PLC ±
1 PLC ±
2 PLC ±
3 PLC ±
4 PLC ±
ANGLES ±

MATERIAL - -
FINISH - -

TE Connectivity
Harrisburg, PA 17105-3608

NAME Ocean End Feed Applicator -

SIZE	CAGE CODE	DRAWING NO	RESTRICTED TO
A1	00779	C-2150034	-

Customer Accessible Production Drawing | SCALE 1:1 | SHEET 3 OF 4 | REV C1

SHEETS 1 & 2 ARE NOT REQUIRED FOR PACIFIC VERSION

THIS DRAWING IS UNPUBLISHED. RELEASED FOR PUBLICATION 20
© COPYRIGHT 20 BY TYCO ELECTRONICS CORPORATION. ALL RIGHTS RESERVED.

LOC	DIST
A	66

REVISIONS

P	LTR	DESCRIPTION	DATE	DWN	APVD
	-	SEE SHEET 1	-	-	-

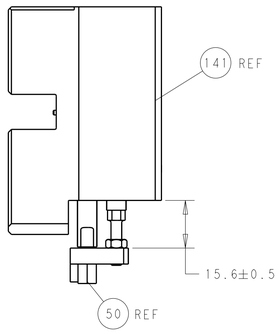

HOLDDOWN SET-UP

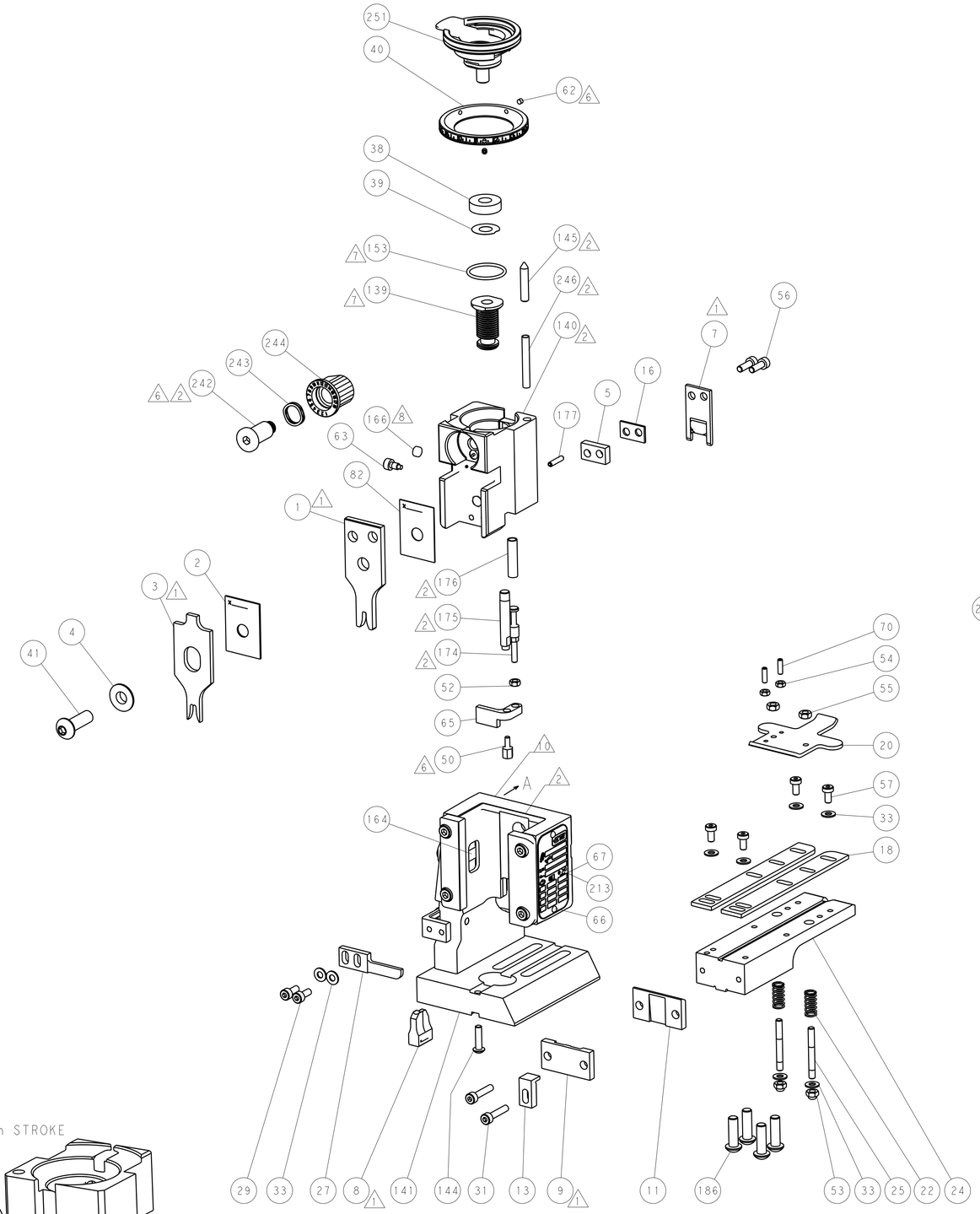

FEED TYPE

MECHANICAL

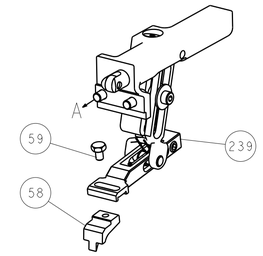

PNEUMATIC

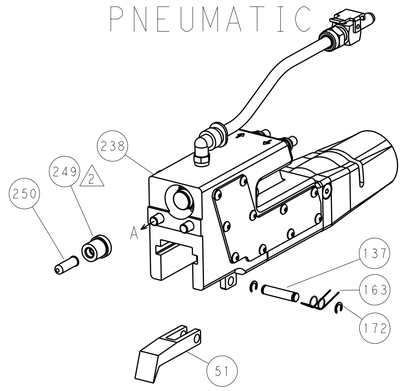

SERVO
LATCH PLATE

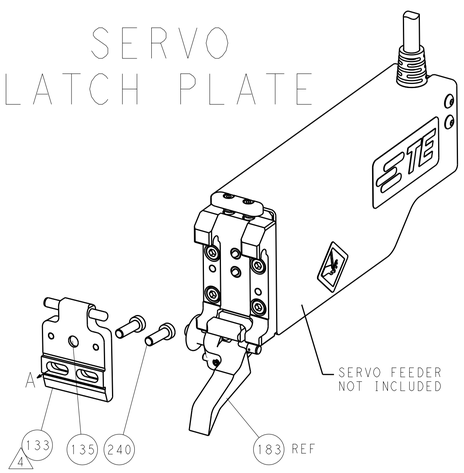

CAM POSITIONS

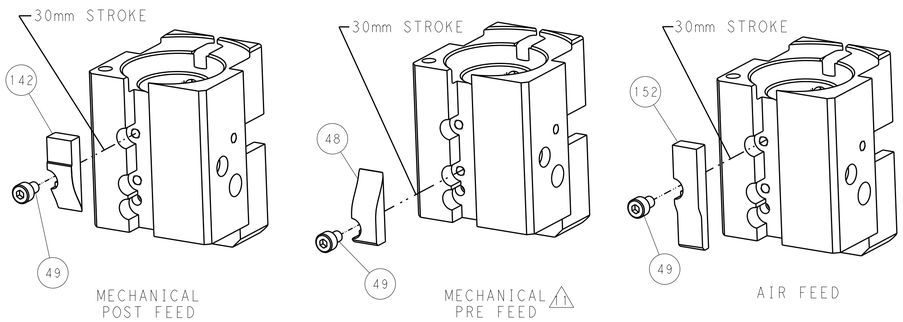

PACIFIC VERSION
Shown on sheets 3 of 4 & 4 of 4
(Atlantic version shown on sheets 1 of 4 & 2 of 4)

THIS DRAWING IS A CONTROLLED DOCUMENT FOR TYCO ELECTRONICS CORPORATION. IT IS SUBJECT TO CHANGE AND THE CONTROLLING ENGINEERING ORGANIZATION SHOULD BE CONTACTED FOR THE LATEST REVISION.

DIMENSIONS: mm

TOLERANCES UNLESS OTHERWISE SPECIFIED:
0 PLC ±
1 PLC ±
2 PLC ±
3 PLC ±
4 PLC ±
ANGLES ±

MATERIAL - -
FINISH - -

DWN	C.CHEN	09JAN2012
CHK	S.XI	09JAN2012
APVD	L.CRUZ	09JAN2012
PRODUCT SPEC	-	
APPLICATION SPEC	-	
WEIGHT	-	

TE Connectivity
Harrisburg, PA 17105-3608

NAME: Ocean End Feed Applicator -

SIZE	CAGE CODE	DRAWING NO	RESTRICTED TO
A1	00779	C-2150034	-

Customer Accessible Production Drawing

SCALE	SHEET	OF	REV
1:1	4	4	C1

AMP 4805 REV 31MAR2000

SHEETS 1 & 2 ARE NOT REQUIRED FOR PACIFIC VERSION