THIS DRAWING IS UNPUBLISHED. RELEASED FOR PUBLICATION 20
© COPYRIGHT 20 BY - ALL RIGHTS RESERVED.

REVISIONS

P	LTR	DESCRIPTION	DATE	DWN	APVD
	C	ECR-15-008603	24JUN2015	KG	DW
	C1	ECR-15-011044	19AUG2015	KG	DW

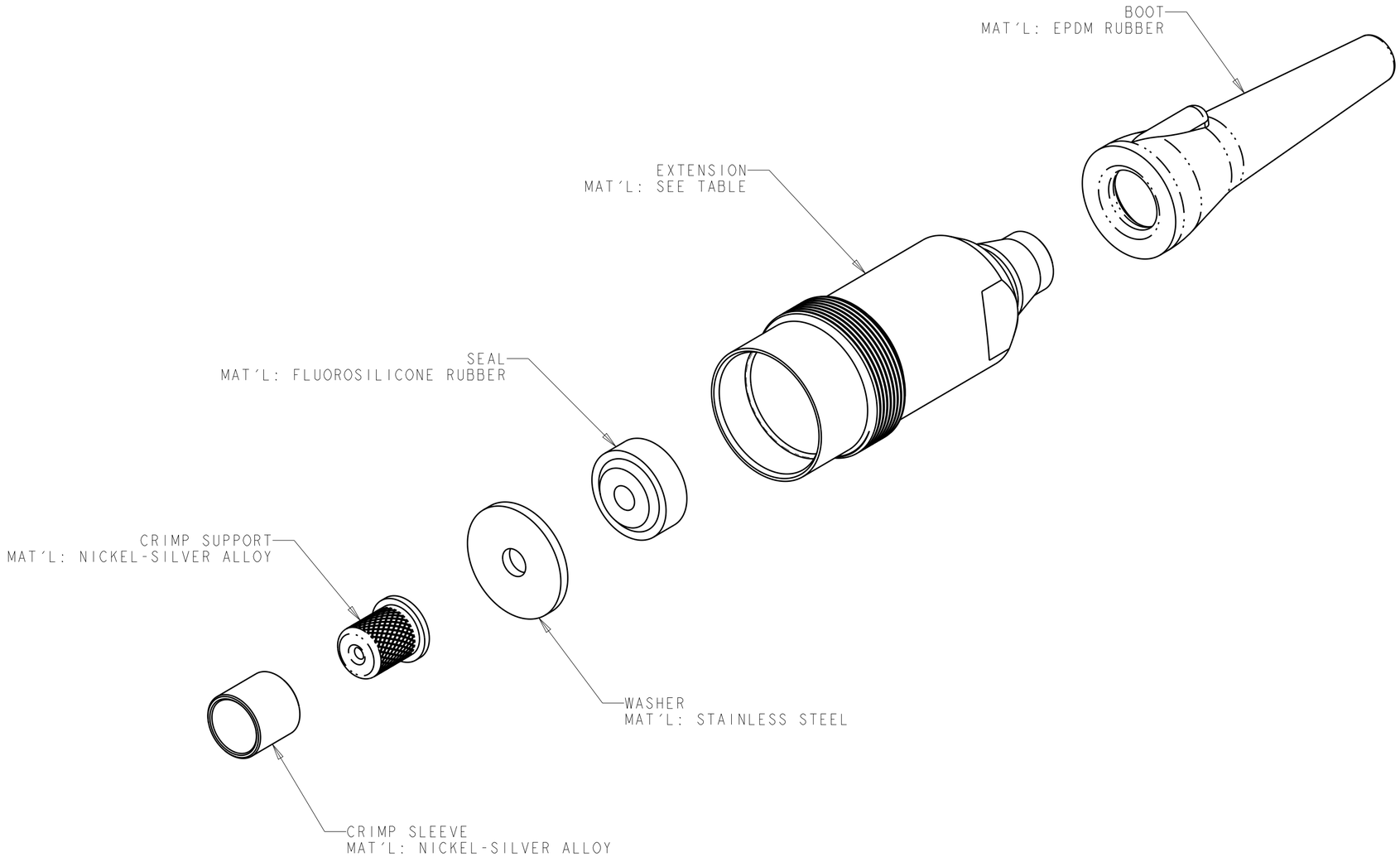

	EXTENSION MATERIAL	MAXIMUM CABLE DIAMETER	PART NUMBER
	5 ALUMINUM	7.5mm	3-1918932-2
		6.7mm	3-1918932-1
		6.0mm	3-1918932-0
		5.5mm	2-1918932-9
		5.0mm	2-1918932-8
		4.2mm	2-1918932-7
		3.6mm	2-1918932-6
		3.2mm	2-1918932-5
SUPERSEDED BY: 3-1918932-2	4 ALUMINUM	7.5mm	2-1918932-4
SUPERSEDED BY: 3-1918932-1		6.7mm	2-1918932-3
SUPERSEDED BY: 3-1918932-0		6.0mm	2-1918932-2
SUPERSEDED BY: 2-1918932-9		5.5mm	2-1918932-1
SUPERSEDED BY: 2-1918932-8		5.0mm	2-1918932-0
SUPERSEDED BY: 2-1918932-7		4.2mm	1-1918932-9
SUPERSEDED BY: 2-1918932-6		3.6mm	1-1918932-8
SUPERSEDED BY: 2-1918932-5		3.2mm	1-1918932-7
	NICKEL ALUMINUM BRONZE	7.5mm	1-1918932-6
		6.7mm	1-1918932-5
		6.0mm	1-1918932-4
		5.5mm	1-1918932-3
		5.0mm	1-1918932-2
		4.2mm	1-1918932-1
		3.6mm	1-1918932-0
		3.2mm	1918932-9
	3 ALUMINUM	7.5mm	1918932-8
		6.7mm	1918932-7
		6.0mm	1918932-6
		5.5mm	1918932-5
		5.0mm	1918932-4
		4.2mm	1918932-3
		3.6mm	1918932-2
		3.2mm	1918932-1

1. PACKAGED LOOSE PIECE.
2. DIMENSIONS ARE FOR REFERENCE ONLY.
3. FINISH: HARD ANODIZE.
4. FINISH: OLIVE DRAB ZINC.
5. FINISH: BLACK ZINC-NICKEL.

THIS DRAWING IS A CONTROLLED DOCUMENT. DIMENSIONING AND TOLERANCING PER ASME Y14.5M-2009

DIMENSIONS: mm

TOLERANCES UNLESS OTHERWISE SPECIFIED:
0 PLC ±-
1 PLC ±-
2 PLC ±-
3 PLC ±-
4 PLC ±-
ANGLES ±-

MATERIAL: AS LISTED -

FINISH: 3 4

DWN 27OCT2006 K.GLATFELTER
CHK 02JUN2008 D. WERTMAN
APVD 02JUN2008 D. WERTMAN
PRODUCT SPEC -
APPLICATION SPEC -
WEIGHT -

TE Connectivity

NAME: CABLE ADAPTER KIT, SEALED BLKHD, PRO BEAM JR. -

SIZE	CAGE CODE	DRAWING NO	RESTRICTED TO
A2	00779	C-1918932	-

Customer Drawing | SCALE 2:1 | SHEET 1 OF 1 | REV C1

1471-9 (3/13)