1. Mechanical Dimensions:

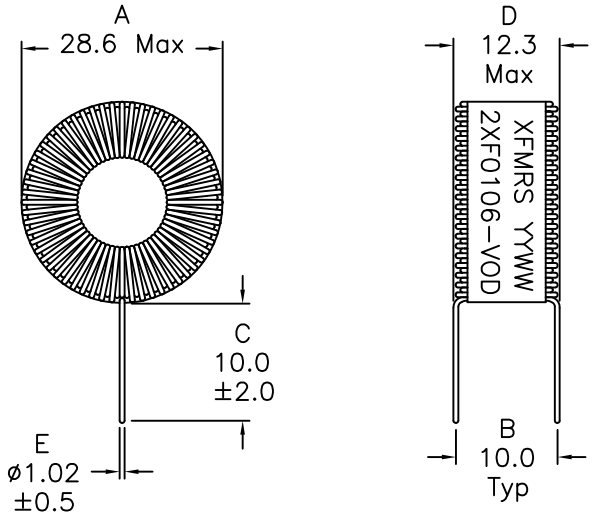

2. Schematic:

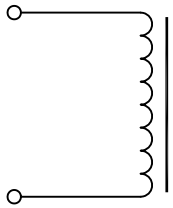

3. Electrical Specifications: @25°C

OCL: 10.0.uH±10% @10KHz, 0.1V 0Adc

Q: 3.0 Min @10KHz, 0.1V

Isat: 45Adc (10% drop in OCL Typical)

DCR: 26 mOhms Max

Irms: 6.1A (20°C Temp Rise Typical)

Irms: 8.2A (40°C Temp Rise Typical)

SRF: 25.5MHz Typ

Notes:

1. Solderability: Leads shall meet MIL-STD-202G, Method 208H for solderability.
2. Flammability: UL94V-0
3. ASTM oxygen index: > 28%
4. Insulation System: Class F 155°C. UL file E151556
5. Operating Temperature Range: All listed parameters are to be within tolerance from -40°C to +125°C
6. Storage Temperature Range: -55°C to +125°C
7. Aqueous wash compatible
8. Electrical and mechanical specifications 100% tested
9. RoHS Compliant Component

DOC. REV. A/2

XFMRS Inc. www.XFMRS.com	Title: Class D Amp Inductor		
UNLESS OTHERWISE SPECIFIED TOLERANCES: .xx ±0.25 Dimensions in MM	P/N: 2XF0106-VOD		REV. A
	DWN.	Yaun	Jul-07-14
	CHK.	YK Liao	Jul-07-14
SHEET 1 OF 1	APP.	Joe Huff	Jul-07-14

PROPRIETARY Document is the property of XFMRS Group & is not allowed to be duplicated without authorization.