RECTRON SEMICONDUCTOR
TECHNICAL SPECIFICATION

2SS20LV THRU 2SS60LV

SURFACE MOUNT SCHOTTKY BARRIER RECTIFIER

VOLTAGE RANGE 20 to 60 Volts CURRENT 2.0 Amperes

FEATURES

* Low power loss, high efficiency
* Low leakage
* Low forward voltage drop
* High current capability
* High speed switching
* High surge capabitity
* High reliability
* Guard ring construction on dic
* Anti-ESD
* P/N suffix V means AEC-Q101 qualified, e.g:2SS20LV
* P/N suffix V means Halogen-free

MECHANICAL DATA

* Epoxy: Device has UL flammability classification 94V-O
* Mounting position: Any
* Flat lead frame

MAXIMUM RATINGS AND ELECTRICAL CHARACTERISTICS

Ratings at 25 °C ambient temperature unless otherwise specified.
Single phase, half wave, 60 Hz, resistive or inductive load.
For capacitive load, derate current by 20%.



SOD-123FL

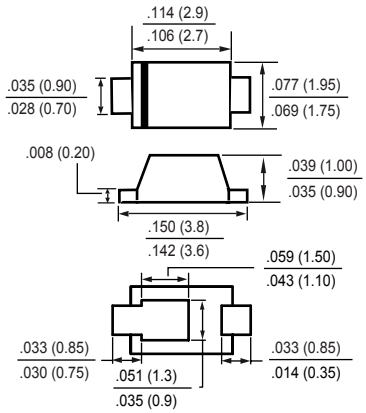

Dimensions in inches and (millimeters)

MAXIMUM RATINGS (@ TA=25 °C unless otherwise noted)

RATINGS	SYMBOL	2SS20L	2SS30L	2SS40L	2SS50L	2SS60L	UNITS
Maximum Recurrent Peak Reverse Voltage	V_{RRM}	20	30	40	50	60	Volts
Maximum RMS Voltage	V_{RMS}	14	21	28	35	42	Volts
Maximum DC Blocking Voltage	V_{DC}	20	30	40	50	60	Volts
Maximum Average Forward Rectified Current @ T_A=75 °C	I_O	2.0					Amps
Peak Forward Surge Current 8.3 ms single half sine-wave superimposed on rated load (JEDEC method)	I_{FSM}	60					Amps
Typical Current Squared Time	I^2T	14.94					A^2S
Typical Thermal Resistance (Note 3)	$R_{\theta JA}$	110					°C/W
	$R_{\theta JL}$	3					
Operating Temperature Range	T_J	-55 to + 150					°C
Storage Temperature Range	T_{STG}	-55 to + 150					°C
Total Capacitance (Note 1)	C_T	75					pF

ELECTRICAL CHARACTERISTICS (@TA=25 °C unless otherwise noted)

CHARACTERISTICS		SYMBOL	2SS20L	2SS30L	2SS40L	2SS50L	2SS60L	UNITS
Maximum Instantaneous Forward Voltage at 2.0A DC		V_F	0.51			0.70		Volts
Maximum Average Reverse Current	@TA = 25°C	I_R	30					uAmps
at Rated DC Blocking Voltage	@TA = 150°C		2.0					mAmps

NOTES : 1. Measured at 1 MHz and applied reverse voltage of 4 Volts.
2. "ROHS compliant",
3. Thermal Resistance: Mounted on PCB.

2020-11
REV:O

RATING AND CHARACTERISTICS CURVES(2SS20LV THRU 2SS60LV)

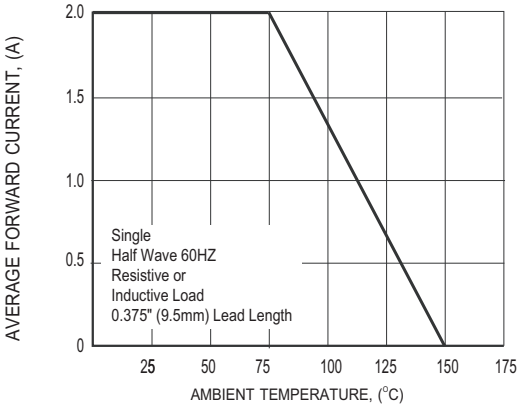

FIG.1 TYPICAL FORWARD CURRENT DERATING CURVE

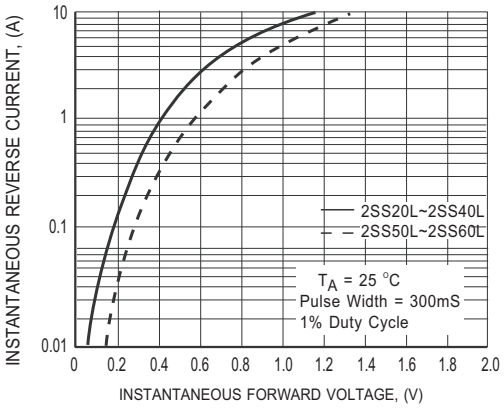

FIG.2 MAXIMUM INSTANTANEOUS FORWARD CHARACTERISTICS

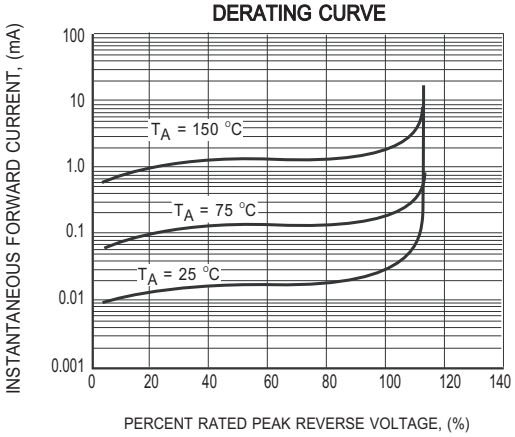

FIG.3 MAXIMUM REVERSE CHARACTERISTICS

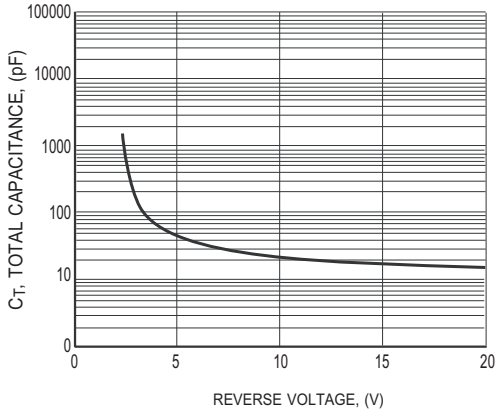

FIG.4 TYPICAL TOTAL CAPACITANCE

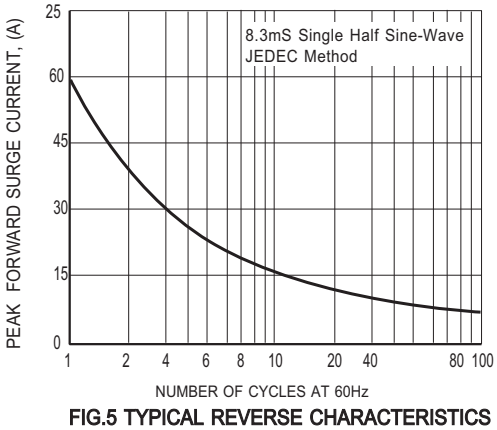

FIG.5 TYPICAL REVERSE CHARACTERISTICS

Mounting Pad Layout

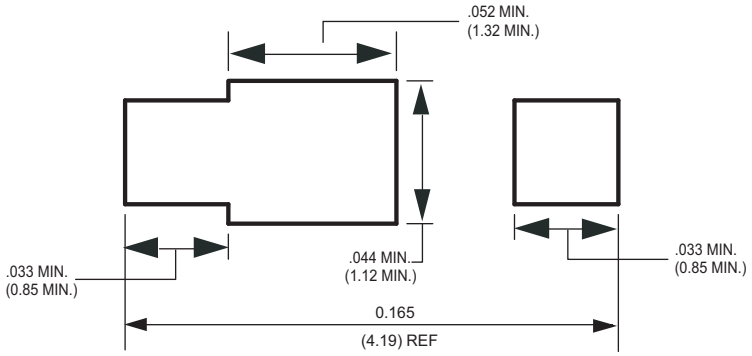

Dimensions in inches and (millimeters)

Marking Description

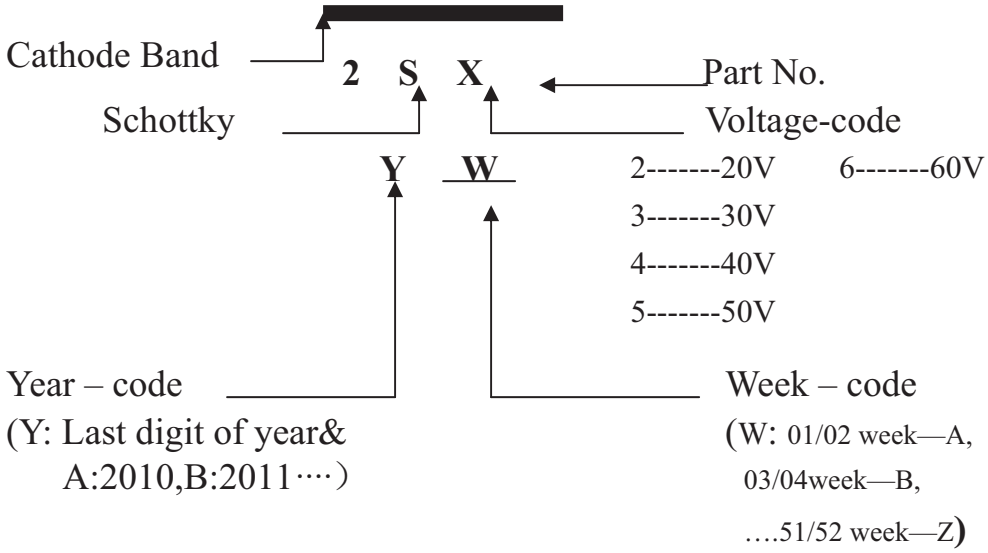

PACKAGING OF DIODE AND BRIDGE RECTIFIERS

REEL PACK

PACKAGE	PACKING CODE	EA PER REEL	EA PER INNER BOX	COMPONENT SPACE (mm)	TAPE SPACE (mm)	REEL DIA (mm)	CARTON SIZE (mm)	EA PER CARTON	GROSS WEIGHT(Kg)
SOD-123F/ SOD-123FL	-W	3,000	15,000	---	---	178	390*205*31	120,000	6.964

DISCLAIMER NOTICE

Rectron Inc reserves the right to make changes without notice to any product specification herein, to make corrections, modifications, enhancements or other changes. Rectron Inc or anyone on its behalf assumes no responsibility or liability for any errors or inaccuracies. Data sheet specifications and its information contained are intended to provide a product description only. "Typical" parameters which may be included on RECTRON data sheets and/ or specifications can and do vary in different applications and actual performance may vary over time. Rectron Inc does not assume any liability arising out of the application or use of any product or circuit.

Rectron products are not designed, intended or authorized for use in medical, life-saving implant or other applications intended for life-sustaining or other related applications where a failure or malfunction of component or circuitry may directly or indirectly cause injury or threaten a life without expressed written approval of Rectron Inc. Customers using or selling Rectron components for use in such applications do so at their own risk and shall agree to fully indemnify Rectron Inc and its subsidiaries harmless against all claims, damages and expenditures.