TOSHIBA Field Effect Transistor Silicon N Channel MOS Type (π-MOSIII)

2SK3301

Switching Regulatorand DC-DC Converter Applications

- Low drain-source ON resistance: $R_{DS\ (ON)}$ = 15 Ω (typ.)
- High forward transfer admittance: $|Y_{fs}|$ = 0.65 S (typ.)
- Low leakage current: I_{DSS} = 100 μA (max) (V_{DS} = 720 V)
- Enhancement mode: V_{th} = 2.4~3.4 V (V_{DS} = 10 V, I_D = 1 mA)

Absolute Maximum Ratings (Ta = 25°C)

Characteristics		Symbol	Rating	Unit
Drain-source voltage		V_{DSS}	900	V
Drain-gate voltage (R_{GS} = 20 kΩ)		V_{DGR}	900	V
Gate-source voltage		V_{GSS}	±30	V
Drain current	DC (Note 1)	I_D	1	A
	Pulse (Note 1)	I_{DP}	2	
Drain power dissipation (Tc = 25°C)		P_D	20	W
Single pulse avalanche energy (Note 2)		E_{AS}	140	mJ
Avalanche current		I_{AR}	1	A
Repetitive avalanche energy (Note 3)		E_{AR}	2.0	mJ
Channel temperature		T_{ch}	150	°C
Storage temperature range		T_{stg}	−55~150	°C

Note: Using continuously under heavy loads (e.g. the application of high temperature/current/voltage and the significant change in temperature, etc.) may cause this product to decrease in the reliability significantly even if the operating conditions (i.e. operating temperature/current/voltage, etc.) are within the absolute maximum ratings. Please design the appropriate reliability upon reviewing the Toshiba Semiconductor Reliability Handbook (“Handling Precautions”/Derating Concept and Methods) and individual reliability data (i.e. reliability test report and estimated failure rate, etc).

Thermal Characteristics

Characteristics	Symbol	Max	Unit
Thermal resistance, channel to case	$R_{th\ (ch-c)}$	6.25	°C/W
Thermal resistance, channel to ambient	$R_{th\ (ch-a)}$	125	°C/W

Note 1: Ensure that the channel temperature does not exceed 150°C.

Note 2: V_{DD} = 90 V, T_{ch} = 25°C (initial), L = 257 mH, R_G = 25 Ω, I_{AR} = 1 A

Note 3: Repetitive rating: pulse width limited by max junction temperature

This transistor is an electrostatic-sensitive device. Please handle with caution.

Unit: mm

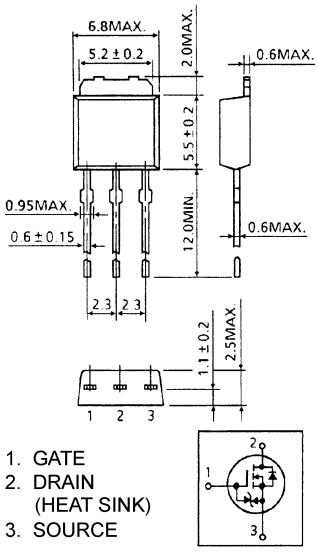

JEDEC	—
JEITA	SC-64
TOSHIBA	2-7B1B

Weight: 0.36 g (typ.)

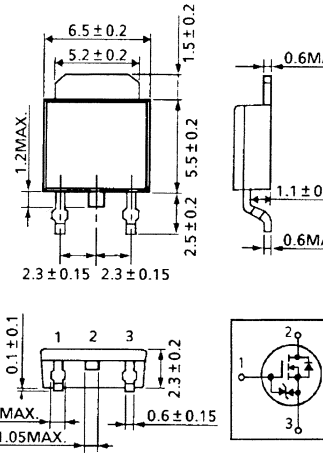

JEDEC	—
JEITA	SC-64
TOSHIBA	2-7J1B

Weight: 0.36 g (typ.)

Electrical Characteristics (Ta = 25°C)

Characteristics		Symbol	Test Condition	Min	Typ.	Max	Unit
Gate leakage current		I_{GSS}	V_{GS} = ±30 V, V_{DS} = 0 V	—	—	±10	μA
Gate-source breakdown voltage		$V_{(BR)\ GSS}$	I_G = ±10 μA, V_{DS} = 0 V	±30	—	—	V
Drain cut-off current		I_{DSS}	V_{DS} = 720 V, V_{GS} = 0 V	—	—	100	μA
Drain-source breakdown voltage		$V_{(BR)\ DSS}$	I_D = 10 mA, V_{GS} = 0 V	900	—	—	V
Gate threshold voltage		V_{th}	V_{DS} = 10 V, I_D = 1 mA	2.4	—	3.4	V
Drain-source ON resistance		$R_{DS\ (ON)}$	V_{GS} = 10 V, I_D = 0.5 A	—	15	20	Ω
Forward transfer admittance		$\|Y_{fs}\|$	V_{DS} = 10 V, I_D = 0.5 A	0.3	0.65	—	S
Input capacitance		C_{iss}	V_{DS} = 25 V, V_{GS} = 0 V, f = 1 MHz	—	165	—	pF
Reverse transfer capacitance		C_{rss}		—	6	—	pF
Output capacitance		C_{oss}		—	21	—	pF
Switching time	Rise time	t_r	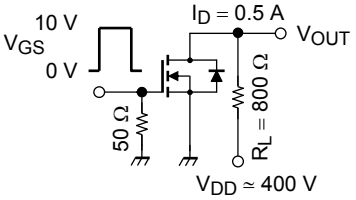	—	15	—	ns
	Turn-on time	t_{on}		—	60	—	
	Fall time	t_f		—	40	—	
	Turn-off time	t_{off}	Duty ≦ 1%, t_w = 10 μs	—	110	—	
Total gate charge (gate-source plus gate-drain)		Q_g	V_{DD} ≃ 400 V, V_{GS} = 10 V, I_D = 1 A	—	6	—	nC
Gate-source charge		Q_{gs}		—	3	—	nC
Gate-drain (“miller”) charge		Q_{gd}		—	3	—	nC

Source-Drain Ratings and Characteristics (Ta = 25°C)

Characteristics	Symbol	Test Condition	Min	Typ.	Max	Unit
Continuous drain reverse current (Note 1)	I_{DR}	—	—	—	1	A
Pulse drain reverse current (Note 1)	I_{DRP}	—	—	—	2	A
Forward voltage (diode)	V_{DSF}	I_{DR} = 1 A, V_{GS} = 0 V	—	—	−1.7	V
Reverse recovery time	t_{rr}	I_{DR} = 1 A, V_{GS} = 0 V	—	1300	—	ns
Reverse recovery charge	Q_{rr}	dI_{DR}/dt = 100 A/μs	—	1.95	—	μC

Marking

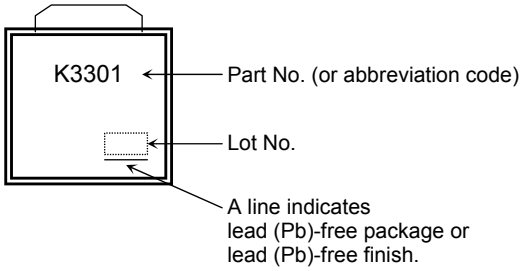

RESTRICTIONS ON PRODUCT USE

20070701-EN

- The information contained herein is subject to change without notice.
- TOSHIBA is continually working to improve the quality and reliability of its products. Nevertheless, semiconductor devices in general can malfunction or fail due to their inherent electrical sensitivity and vulnerability to physical stress. It is the responsibility of the buyer, when utilizing TOSHIBA products, to comply with the standards of safety in making a safe design for the entire system, and to avoid situations in which a malfunction or failure of such TOSHIBA products could cause loss of human life, bodily injury or damage to property.
  In developing your designs, please ensure that TOSHIBA products are used within specified operating ranges as set forth in the most recent TOSHIBA products specifications. Also, please keep in mind the precautions and conditions set forth in the “Handling Guide for Semiconductor Devices,” or “TOSHIBA Semiconductor Reliability Handbook” etc.
- The TOSHIBA products listed in this document are intended for usage in general electronics applications (computer, personal equipment, office equipment, measuring equipment, industrial robotics, domestic appliances, etc.).These TOSHIBA products are neither intended nor warranted for usage in equipment that requires extraordinarily high quality and/or reliability or a malfunction or failure of which may cause loss of human life or bodily injury (“Unintended Usage”). Unintended Usage include atomic energy control instruments, airplane or spaceship instruments, transportation instruments, traffic signal instruments, combustion control instruments, medical instruments, all types of safety devices, etc.. Unintended Usage of TOSHIBA products listed in his document shall be made at the customer’s own risk.
- The products described in this document shall not be used or embedded to any downstream products of which manufacture, use and/or sale are prohibited under any applicable laws and regulations.
- The information contained herein is presented only as a guide for the applications of our products. No responsibility is assumed by TOSHIBA for any infringements of patents or other rights of the third parties which may result from its use. No license is granted by implication or otherwise under any patents or other rights of TOSHIBA or the third parties.
- Please contact your sales representative for product-by-product details in this document regarding RoHS compatibility. Please use these products in this document in compliance with all applicable laws and regulations that regulate the inclusion or use of controlled substances. Toshiba assumes no liability for damage or losses occurring as a result of noncompliance with applicable laws and regulations.