To all our customers

Regarding the change of names mentioned in the document, such as Hitachi Electric and Hitachi XX, to Renesas Technology Corp.

The semiconductor operations of Mitsubishi Electric and Hitachi were transferred to Renesas Technology Corporation on April 1st 2003. These operations include microcomputer, logic, analog and discrete devices, and memory chips other than DRAMs (flash memory, SRAMs etc.) Accordingly, although Hitachi, Hitachi, Ltd., Hitachi Semiconductors, and other Hitachi brand names are mentioned in the document, these names have in fact all been changed to Renesas Technology Corp. Thank you for your understanding. Except for our corporate trademark, logo and corporate statement, no changes whatsoever have been made to the contents of the document, and these changes do not constitute any alteration to the contents of the document itself.

Renesas Technology Home Page: http://www.renesas.com

Not recommend for new design

Renesas Technology Corp.
Customer Support Dept.
April 1, 2003

Cautions

Keep safety first in your circuit designs!

1. Renesas Technology Corporation puts the maximum effort into making semiconductor products better and more reliable, but there is always the possibility that trouble may occur with them. Trouble with semiconductors may lead to personal injury, fire or property damage.
   Remember to give due consideration to safety when making your circuit designs, with appropriate measures such as (i) placement of substitutive, auxiliary circuits, (ii) use of nonflammable material or (iii) prevention against any malfunction or mishap.

Notes regarding these materials

1. These materials are intended as a reference to assist our customers in the selection of the Renesas Technology Corporation product best suited to the customer's application; they do not convey any license under any intellectual property rights, or any other rights, belonging to Renesas Technology Corporation or a third party.
2. Renesas Technology Corporation assumes no responsibility for any damage, or infringement of any third-party's rights, originating in the use of any product data, diagrams, charts, programs, algorithms, or circuit application examples contained in these materials.
3. All information contained in these materials, including product data, diagrams, charts, programs and algorithms represents information on products at the time of publication of these materials, and are subject to change by Renesas Technology Corporation without notice due to product improvements or other reasons. It is therefore recommended that customers contact Renesas Technology Corporation or an authorized Renesas Technology Corporation product distributor for the latest product information before purchasing a product listed herein.
   The information described here may contain technical inaccuracies or typographical errors.
   Renesas Technology Corporation assumes no responsibility for any damage, liability, or other loss rising from these inaccuracies or errors.
   Please also pay attention to information published by Renesas Technology Corporation by various means, including the Renesas Technology Corporation Semiconductor home page (http://www.renesas.com).
4. When using any or all of the information contained in these materials, including product data, diagrams, charts, programs, and algorithms, please be sure to evaluate all information as a total system before making a final decision on the applicability of the information and products. Renesas Technology Corporation assumes no responsibility for any damage, liability or other loss resulting from the information contained herein.
5. Renesas Technology Corporation semiconductors are not designed or manufactured for use in a device or system that is used under circumstances in which human life is potentially at stake. Please contact Renesas Technology Corporation or an authorized Renesas Technology Corporation product distributor when considering the use of a product contained herein for any specific purposes, such as apparatus or systems for transportation, vehicular, medical, aerospace, nuclear, or undersea repeater use.
6. The prior written approval of Renesas Technology Corporation is necessary to reprint or reproduce in whole or in part these materials.
7. If these products or technologies are subject to the Japanese export control restrictions, they must be exported under a license from the Japanese government and cannot be imported into a country other than the approved destination.
   Any diversion or reexport contrary to the export control laws and regulations of Japan and/or the country of destination is prohibited.
8. Please contact Renesas Technology Corporation for further details on these materials or the products contained therein.

Not recommend for new design

2SH26

Silicon N Channel IGBT
High Speed Power Switching

ADE-208-788A(Z)
2nd. Edition
May 1999

Not recommend for new design

Features

- High speed switching
- Low on-voltage

Outline

TO–220AB

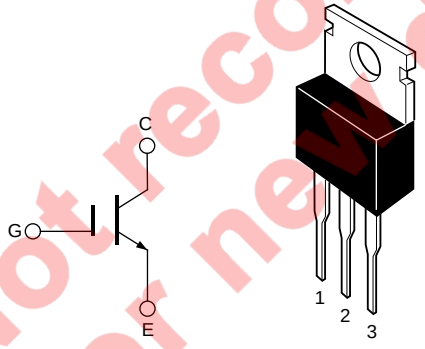

1. Gate
2. Collector (Flange)
3. Emitter

Absolute Maximum Ratings (Ta = 25°C)

Item	Symbol	Ratings	Unit
Collector to Emitter voltage	V_{CES}	600	V
Gate to Emitter voltage	V_{GES}	±20	V
Collector current	I_C	10	A
Collector peak current	ic(peak)	20	A
Collector dissipation	P_C Note1	50	W
Channel temperature	Tj	150	°C
Storage temperature	Tstg	–55 to +150	°C

Note: 1. Value at Tc = 25°C

Electrical Characteristics (Ta = 25°C)

Item	Symbol	Min	Typ	Max	Unit	Test Conditions
Zero gate voltage collector current	I_{CES}	—	—	100	µA	V_{CE} = 600V, V_{GE} = 0
Gate to emitter leak current	I_{GES}	—	—	±1	µA	V_{GE} = ± 20 V, V_{CE} = 0
Gate to emitter cutoff voltage	$V_{GE(off)}$	6.0	—	8.0	V	I_C = 10mA, V_{CE} = 10V
Collector to emitter saturation voltage	$V_{CE(sat)}$	—	2.1	2.6	V	I_C = 10A, V_{GE} = 15V
Input capacitance	Cies	—	620	—	pF	V_{CE} = 10V, V_{GE} = 0 f = 1MHz
Switching time	t_r	—	140	—	ns	I_C = 10A
	t_{on}	—	215	—	ns	R_L = 30 Ω
	t_f	—	300	600	ns	V_{GS} = ±15V
	t_{off}	—	380	760	ns	Rg = 50 Ω

Not recommend for new design

Main Characteristics

Power vs. Temperature Derating

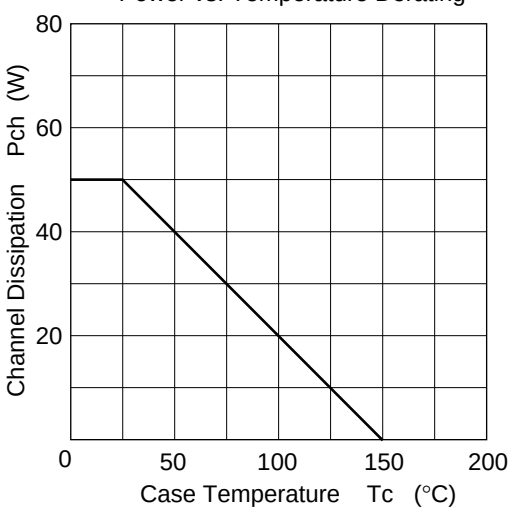

Maximum Safe Operation Area

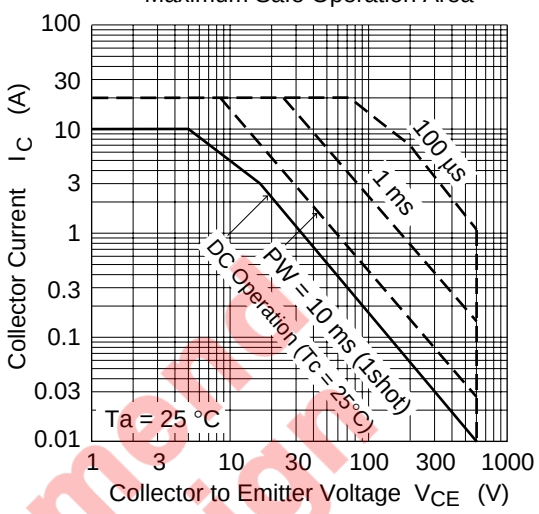

Reverse Bias SOA

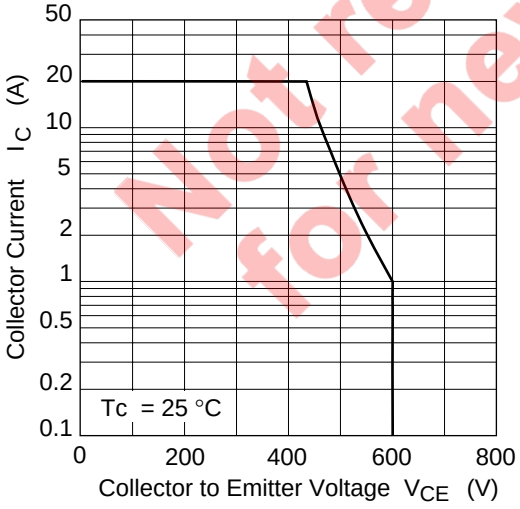

Typical Output Characteristics

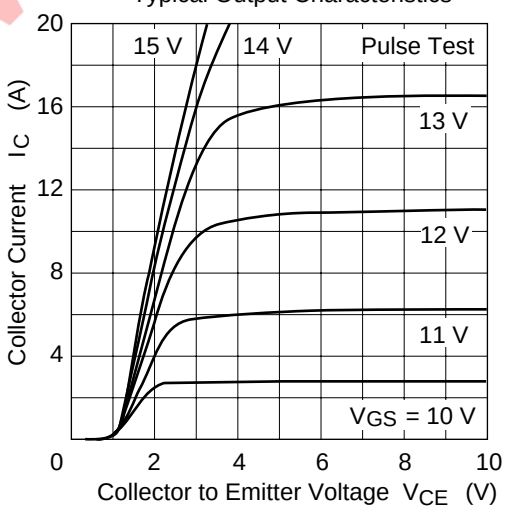

Not recommended for new design

Typical Transfer Characteristics

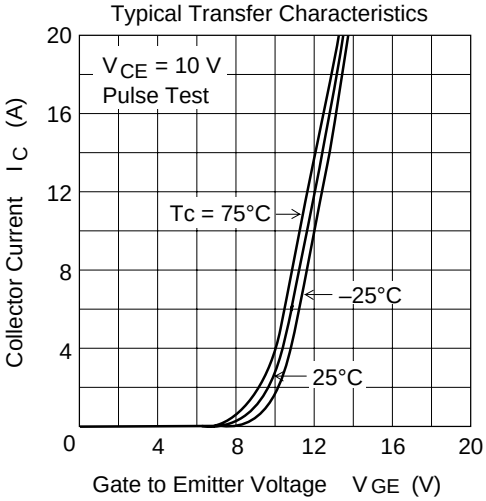

Collector to Emitter Saturation Voltage vs. Gate to Emitter Voltage

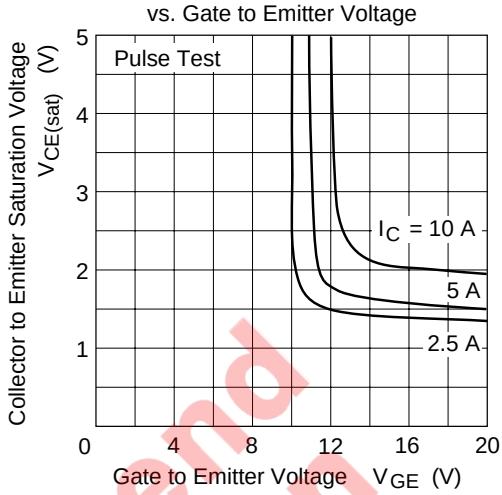

Collecot to Emitter Saturation Voltage vs. Collector Current

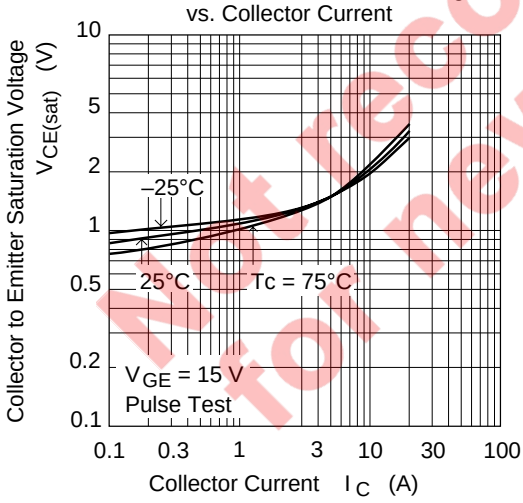

Typical Capacitance vs. Collecotor to Emitter Voltage

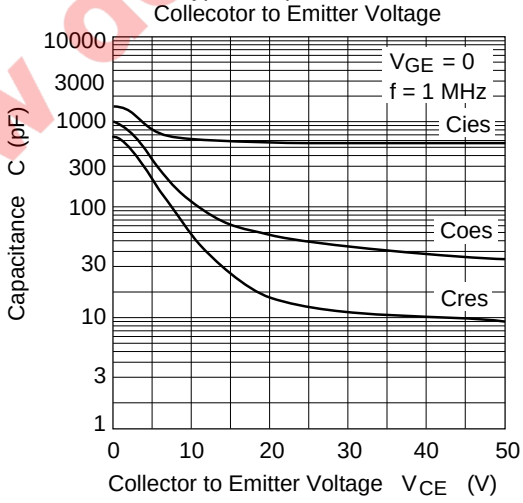

Not recommend for new design

Dynamic Input Characteristics

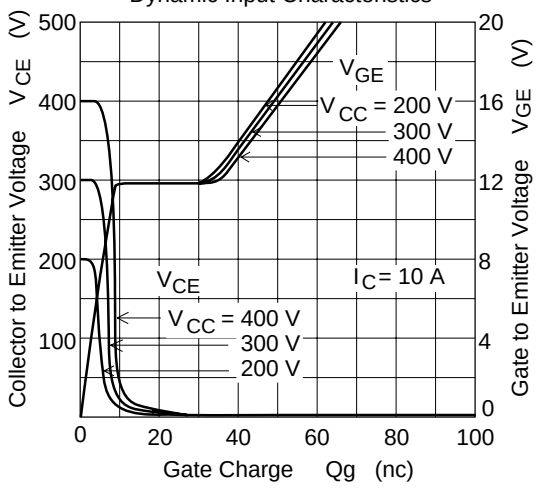

Switching Characteristics

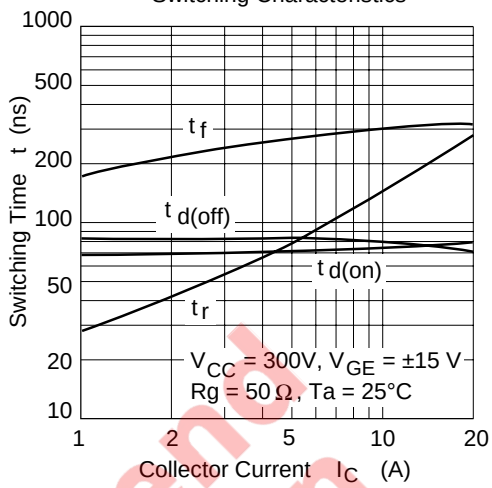

Switching Characteristics

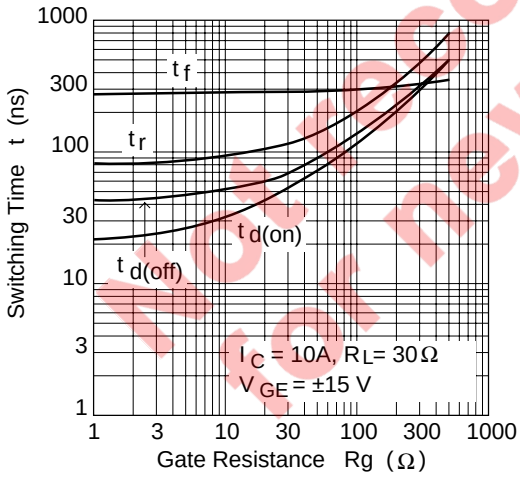

Switching Characteristics

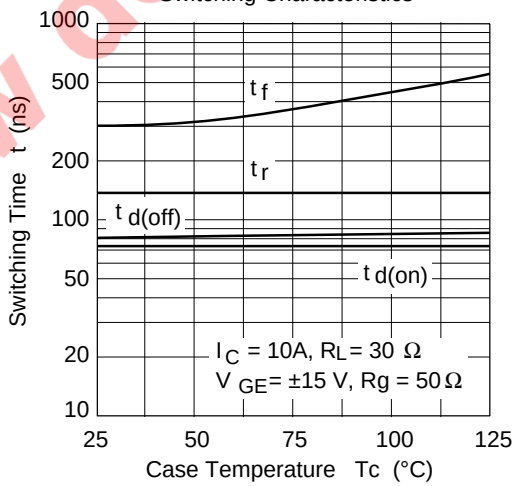

Not recommend for new design

Normalized Transient Thermal Impedance vs. Pulse Width

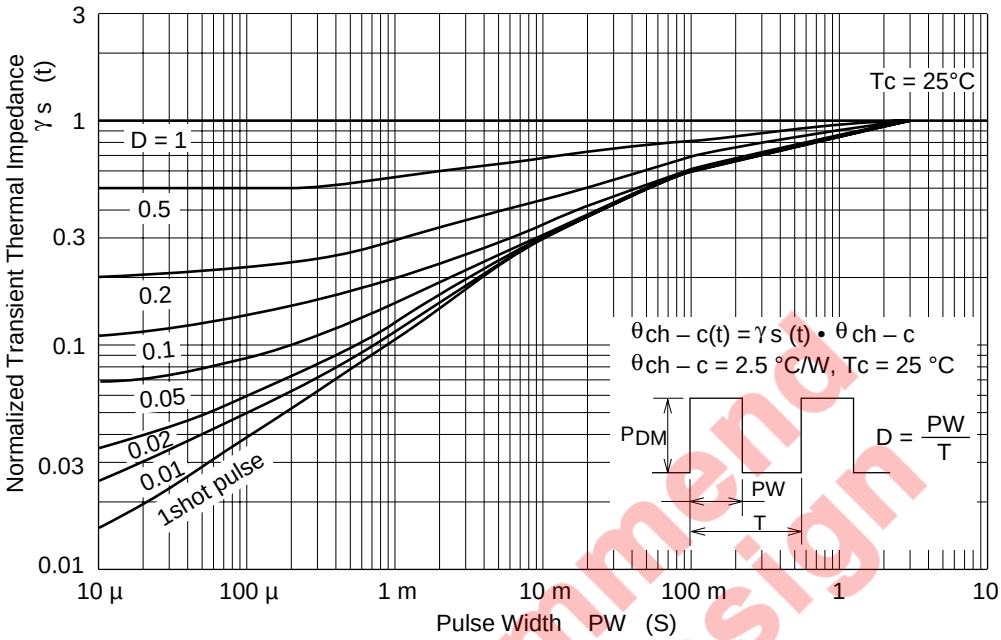

Not recommend for new design

Switching Time Test Circuit

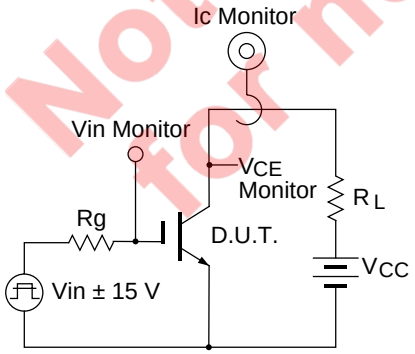

Waveform

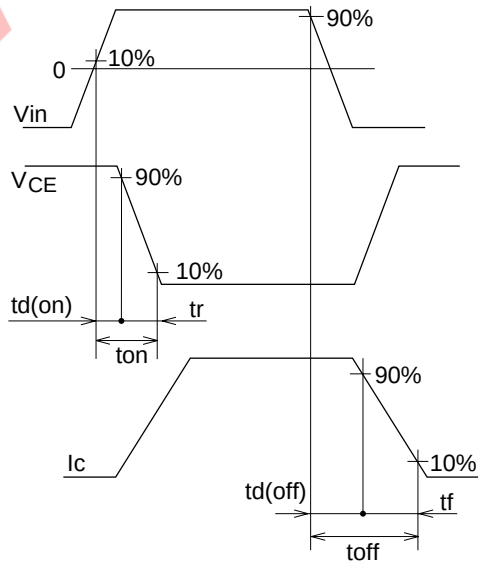

Package Dimensions

Unit: mm

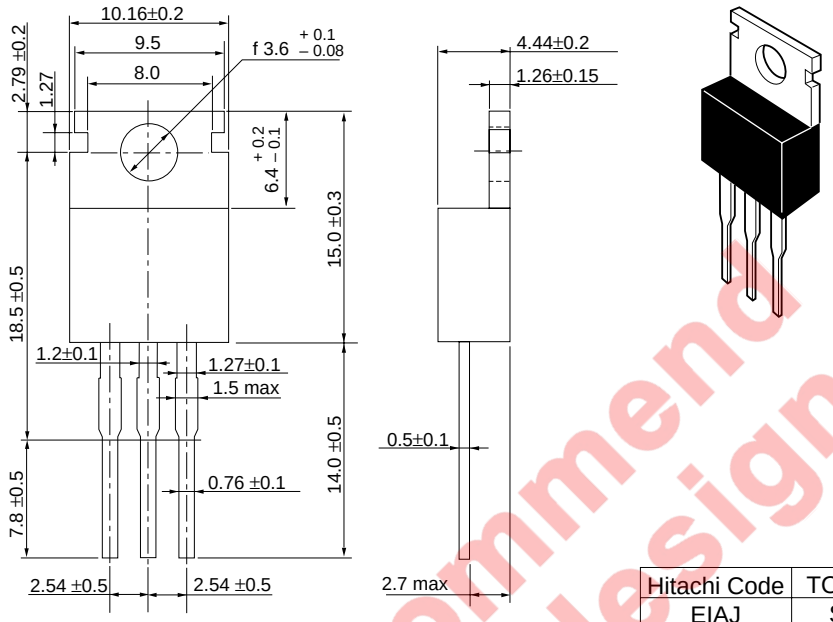

Hitachi Code	TO–220AB
EIAJ	SC–46
JEDEC	—

Not recommend for new design

Cautions

1. Hitachi neither warrants nor grants licenses of any rights of Hitachi's or any third party's patent, copyright, trademark, or other intellectual property rights for information contained in this document. Hitachi bears no responsibility for problems that may arise with third party's rights, including intellectual property rights, in connection with use of the information contained in this document.
2. Products and product specifications may be subject to change without notice. Confirm that you have received the latest product standards or specifications before final design, purchase or use.
3. Hitachi makes every attempt to ensure that its products are of high quality and reliability. However, contact Hitachi's sales office before using the product in an application that demands especially high quality and reliability or where its failure or malfunction may directly threaten human life or cause risk of bodily injury, such as aerospace, aeronautics, nuclear power, combustion control, transportation, traffic, safety equipment or medical equipment for life support.
4. Design your application so that the product is used within the ranges guaranteed by Hitachi particularly for maximum rating, operating supply voltage range, heat radiation characteristics, installation conditions and other characteristics. Hitachi bears no responsibility for failure or damage when used beyond the guaranteed ranges. Even within the guaranteed ranges, consider normally foreseeable failure rates or failure modes in semiconductor devices and employ systemic measures such as fail-safes, so that the equipment incorporating Hitachi product does not cause bodily injury, fire or other consequential damage due to operation of the Hitachi product.
5. This product is not designed to be radiation resistant.
6. No one is permitted to reproduce or duplicate, in any form, the whole or part of this document without written approval from Hitachi.
7. Contact Hitachi's sales office for any questions regarding this document or Hitachi semiconductor products.

Not recommend for new design

HITACHI

Hitachi, Ltd.
Semiconductor & Integrated Circuits.
Nippon Bldg., 2-6-2, Ohte-machi, Chiyoda-ku, Tokyo 100-0004, Japan
Tel: Tokyo (03) 3270-2111 Fax: (03) 3270-5109

URL
NorthAmerica : http:semiconductor.hitachi.com/
Europe : http://www.hitachi-eu.com/hel/ecg
Asia (Singapore) : http://www.has.hitachi.com.sg/grp3/sicd/index.htm
Asia (Taiwan) : http://www.hitachi.com.tw/E/Product/SICD_Frame.htm
Asia (HongKong) : http://www.hitachi.com.hk/eng/bo/grp3/index.htm
Japan : http://www.hitachi.co.jp/Sicd/indx.htm

For further information write to:

Hitachi Semiconductor
(America) Inc.
179 East Tasman Drive,
San Jose,CA 95134
Tel: <1> (408) 433-1990
Fax: <1>(408) 433-0223

Hitachi Europe GmbH
Electronic components Group
Dornacher Straße 3
D-85622 Feldkirchen, Munich
Germany
Tel: <49> (89) 9 9180-0
Fax: <49> (89) 9 29 30 00

Hitachi Europe Ltd.
Electronic Components Group.
Whitebrook Park
Lower Cookham Road
Maidenhead
Berkshire SL6 8YA, United Kingdom
Tel: <44> (1628) 585000
Fax: <44> (1628) 778322

Hitachi Asia Pte. Ltd.
16 Collyer Quay #20-00
Hitachi Tower
Singapore 049318
Tel: 535-2100
Fax: 535-1533

Hitachi Asia Ltd.
Taipei Branch Office
3F, Hung Kuo Building. No.167,
Tun-Hwa North Road, Taipei (105)
Tel: <886> (2) 2718-3666
Fax: <886> (2) 2718-8180

Hitachi Asia (Hong Kong) Ltd.
Group III (Electronic Components)
7/F., North Tower, World Finance Centre,
Harbour City, Canton Road, Tsim Sha Tsui,
Kowloon, Hong Kong
Tel: <852> (2) 735 9218
Fax: <852> (2) 730 0281
Telex: 40815 HITEC HX

Copyright © Hitachi, Ltd., 1998. All rights reserved. Printed in Japan.