Ordering number : EN0676F

2SD1012

Bipolar Transistor
15V, 0.7A, Low V_{CE}(sat), NPN Single SPA

ON Semiconductor®
http://onsemi.com

Specifications

Absolute Maximum Ratings at Ta=25°C

Parameter	Symbol	Conditions	Ratings	Unit
Collector-to-Base Voltage	V_{CBO}		20	V
Collector-to-Emitter Voltage	V_{CEO}		15	V
Emitter-to-Base Voltage	V_{EBO}		5	V
Collector Current	I_C		0.7	A
Collector Current (Pulse)	I_{CP}		1.5	A
Collector Dissipation	P_C		250	mW
Junction Temperature	Tj		125	°C
Storage Temperature	Tstg		−55 to +125	°C

Stresses exceeding Maximum Ratings may damage the device. Maximum Ratings are stress ratings only. Functional operation above the Recommended Operating Conditions is not implied. Extended exposure to stresses above the Recommended Operating Conditions may affect device reliability.

Package Dimensions
unit : mm (typ)
7524-004

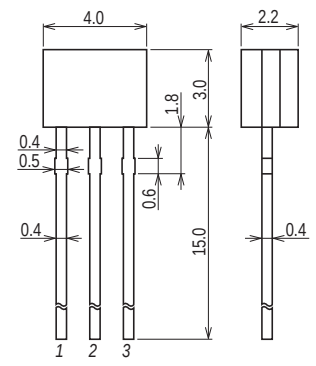

2SD1012G-SPA
2SD1012G-SPA-AC
2SD1012F-SPA
2SD1012F-SPA-AC

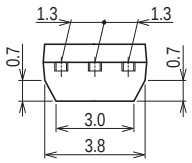

1 : Emitter
2 : Collector
3 : Base

SPA

Product & Package Information
- Package : SPA
- JEITA, JEDEC : SC-72
- Minimum Packing Quantity : 2,500 pcs./box, 500pcs./bag

Marking

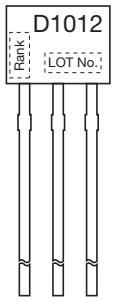

Electrical Connection

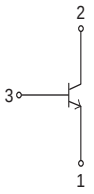

Electrical Characteristics at Ta=25°C

Parameter	Symbol	Conditions	Ratings			Unit
			min	typ	max	
Collector Cutoff Current	I_{CBO}	V_{CB}=15V, I_E=0A			1.0	μA
Emitter Cutoff Current	I_{EBO}	V_{EB}=4V, I_C=0A			1.0	μA
DC Current Gain	$h_{FE}1$	V_{CE}=2V, I_C=50mA	160*		960*	
	$h_{FE}2$	V_{CE}=2V, I_C=500mA Pulse	80			
Gain-Bandwidth Product	f_T	V_{CE}=10V, I_C=50mA		250		MHz
Common Base Output Capacitance	Cob	V_{CB}=10V, f=1MHz		8		pF
Collector-to-Emitter Saturation Voltage	V_{CE}(sat)1	I_C=5mA, I_B=0.5mA		10	25	mV
	V_{CE}(sat)2	I_C=100mA, I_B=10mA		30	80	mV
Base-to-Emitter Saturation Voltage	V_{BE}(sat)	I_C=100mA, I_B=10mA		0.8	1.2	V
Collector-to-Base Breakdown Voltage	$V_{(BR)CBO}$	I_C=10μA, I_E=0A	20			V
Collector-to-Emitter Breakdown Voltage	$V_{(BR)CEO}$	I_C=1mA, R_{BE}=∞	15			V
Emitter-to-Base Breakdown Voltage	$V_{(BR)EBO}$	I_E=10μA, I_C=0A	5			V

* : The 2SD1012 is classified by 50mA h_{FE} as follows :

Rank	F	G	H
h_{FE}	160 to 320	280 to 560	480 to 960

Ordering Information

Device	Package	Shipping	memo
2SD1012G-SPA	SPA	500pcs./bag	Pb Free
2SD1012G-SPA-AC	SPA-WA	2,500pcs./box	
2SD1012F-SPA	SPA	500pcs./bag	
2SD1012F-SPA-AC	SPA-WA	2,500pcs./box	

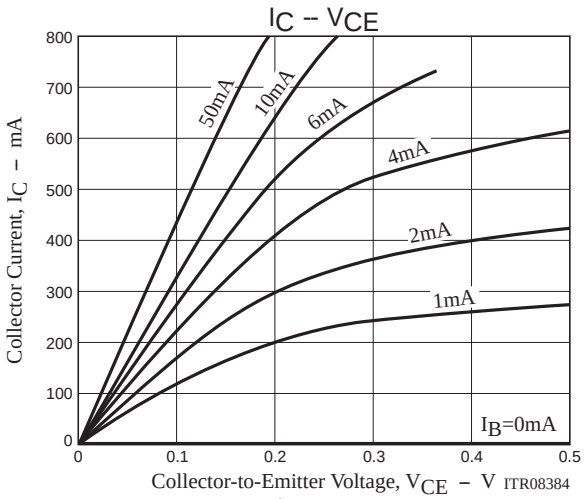
IC -- VCE
Collector Current, IC – mA
50mA
10mA
6mA
4mA
2mA
1mA
IB=0mA
Collector-to-Emitter Voltage, VCE – V
ITR08384

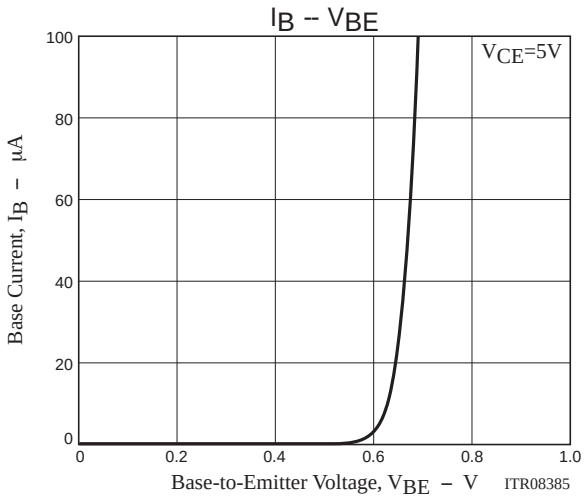
IB -- VBE
VCE=5V
Base Current, IB – μA
Base-to-Emitter Voltage, VBE – V
ITR08385

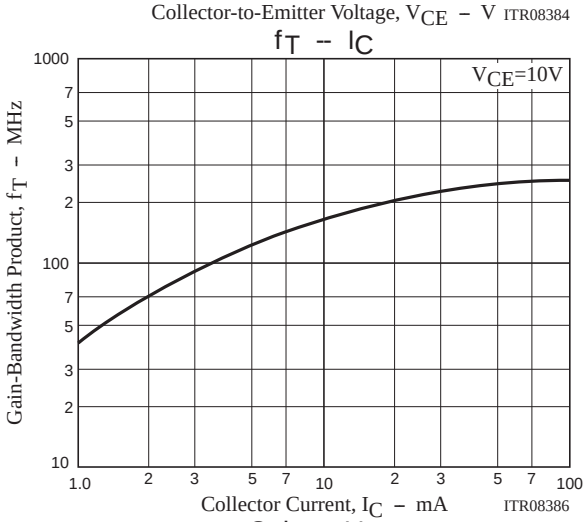
fT -- IC
VCE=10V
Gain-Bandwidth Product, fT – MHz
Collector Current, IC – mA
ITR08386

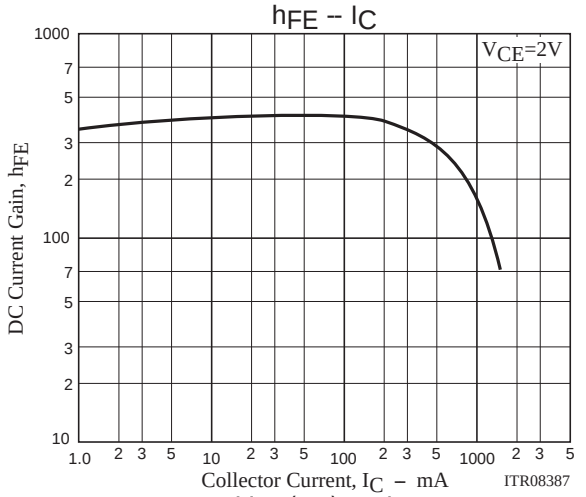
hFE -- IC
VCE=2V
DC Current Gain, hFE
Collector Current, IC – mA
ITR08387

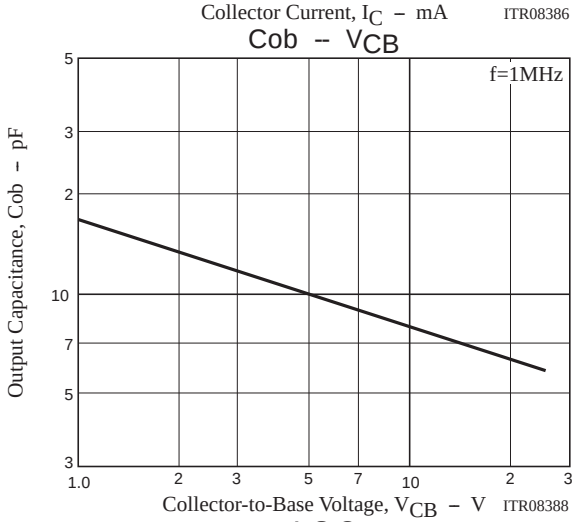
Cob -- VCB
f=1MHz
Output Capacitance, Cob – pF
Collector-to-Base Voltage, VCB – V
ITR08388

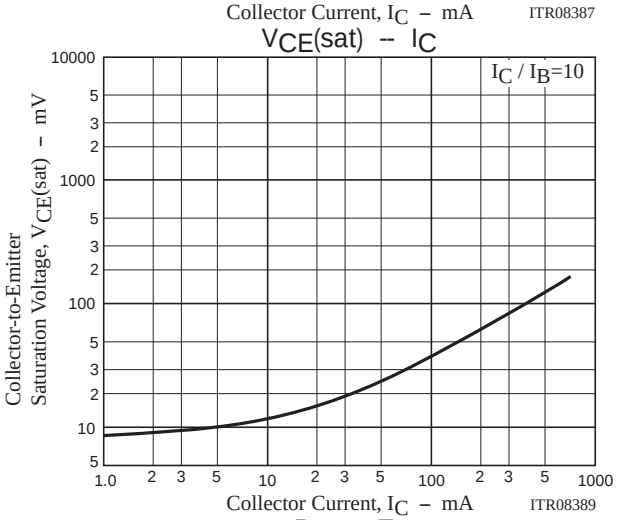
VCE(sat) -- IC
IC / IB=10
Collector-to-Emitter Saturation Voltage, VCE(sat) – mV
Collector Current, IC – mA
ITR08389

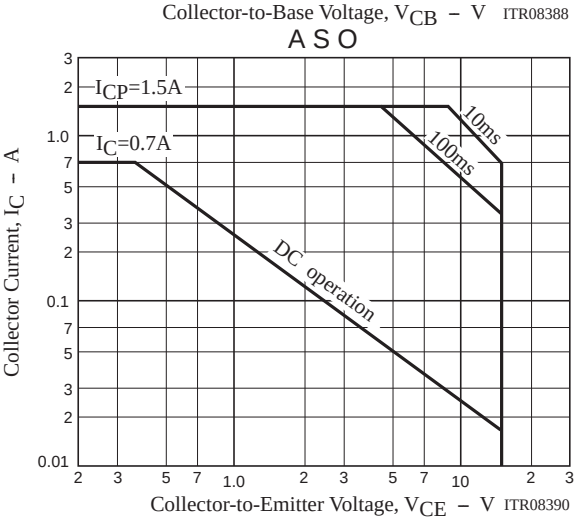
A S O
ICP=1.5A
IC=0.7A
10ms
100ms
DC operation
Collector Current, IC – A
Collector-to-Emitter Voltage, VCE – V
ITR08390

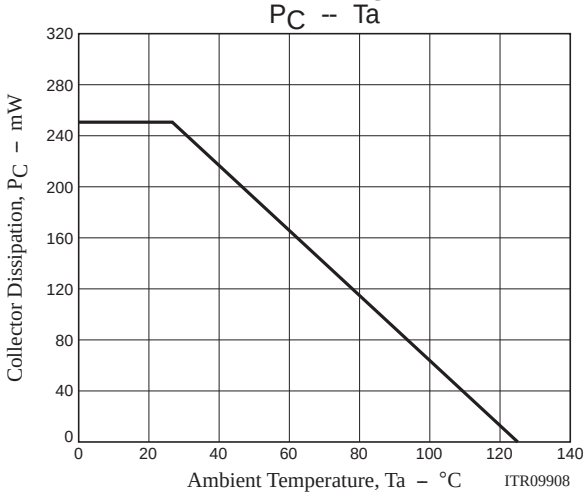
PC -- Ta
Collector Dissipation, PC – mW
Ambient Temperature, Ta – °C
ITR09908

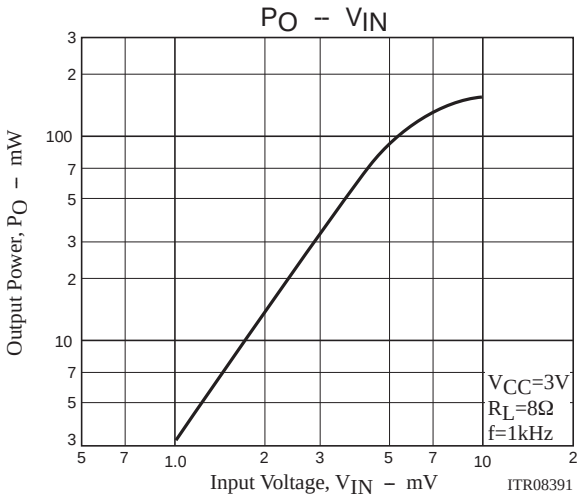
PO – VIN
Output Power, PO – mW
Input Voltage, VIN – mV
VCC=3V
RL=8Ω
f=1kHz
ITR08391

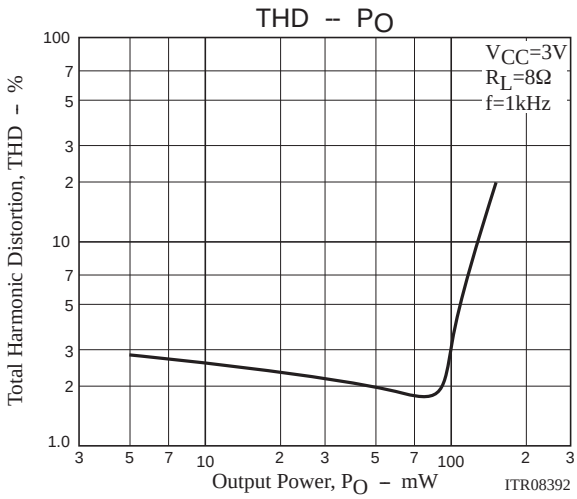
THD – PO
Total Harmonic Distortion, THD – %
Output Power, PO – mW
VCC=3V
RL=8Ω
f=1kHz
ITR08392

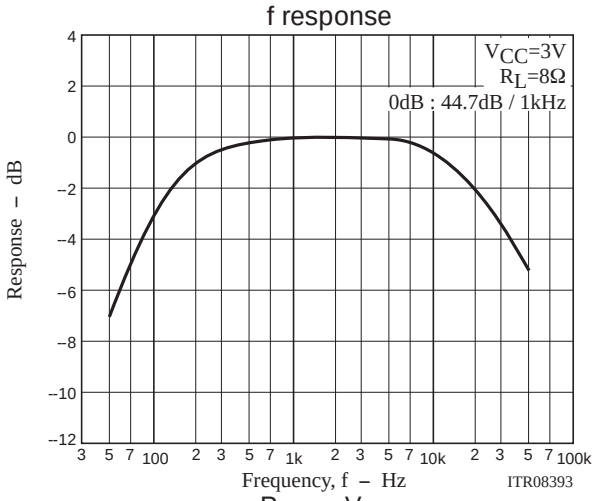
f response
Response – dB
Frequency, f – Hz
VCC=3V
RL=8Ω
0dB : 44.7dB / 1kHz
ITR08393

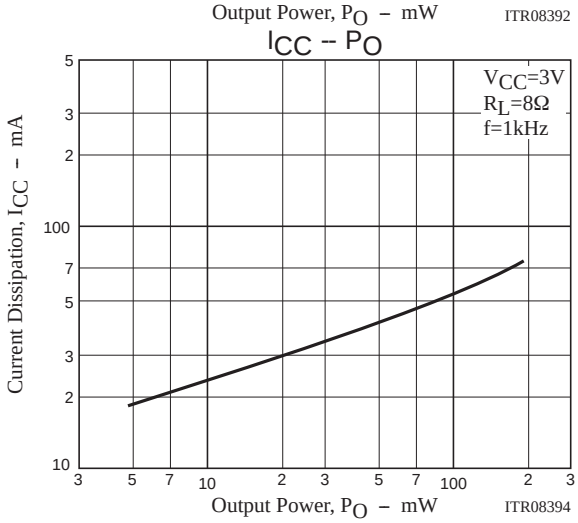
ICC – PO
Current Dissipation, ICC – mA
Output Power, PO – mW
VCC=3V
RL=8Ω
f=1kHz
ITR08394

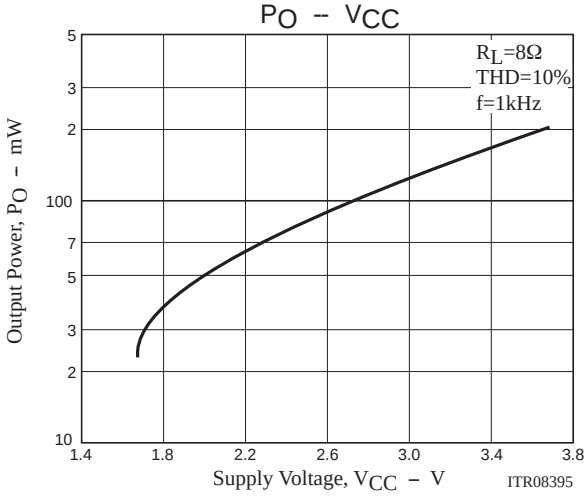
PO – VCC
Output Power, PO – mW
Supply Voltage, VCC – V
RL=8Ω
THD=10%
f=1kHz
ITR08395

Taping Specification

2SD1012G-SPA-AC, 2SD1012F-SPA-AC

Storage package Outline name	Package type	Maximum Number of devices contained(pcs.) Inner box No.	Storage quantity	Packing format Outer box (C—6)	Outer box (C—8)
SPA	A C	C—2 Inner box Dimensions :mm(external) 330×45×145	2,500	16 inner boxes contained(40,000pcs.) Outer box Dimensions:mm(external) 585×345×200	8 inner boxes contained(20,000pcs.) Outer box Dimensions:mm(external) 345×300×200
	A L	C—2 Inner box Dimensions :mm(external) 330×45×145	2,400	16 inner boxes contained(38,400pcs.) Outer box Dimensions:mm(external) 585×345×200	8 inner boxes contained(19,200pcs.) Outer box Dimensions:mm(internal) 345×300×200
	A P	C—4 Inner box Dimensions :mm(external) 330×45×285	5,000	8 inner boxes contained(40,000pcs.) Outer box Dimensions:mm(external) 585×345×200	4 inner boxes contained(20,000pcs.) Outer box Dimensions:mm(internal) 345×300×200
	A S	C—2 Inner box Dimensions :mm(external) 330×45×145	1,200	16 inner boxes contained(19,200pcs.) Outer box Dimensions:mm(external) 585×345×200	8 inner boxes contained(9,600 pcs.) Outer box Dimensions:mm(internal) 345×300×200

1. Packing format

Packing method

Put zigzag folding in an inner box.

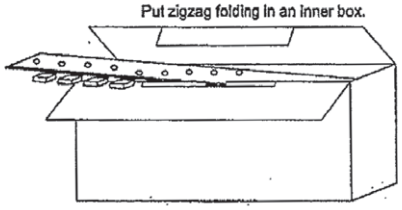

Sample bar code label

(Unit : mm)

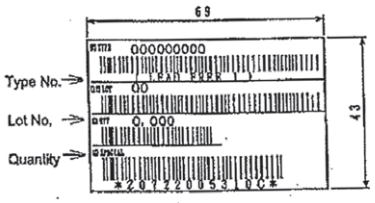

*LEAD FREE 1 :
Lead-free external terminal surface treatment product.

2. Taping specifications

2—1. Carrier tape size (Unit:mm)

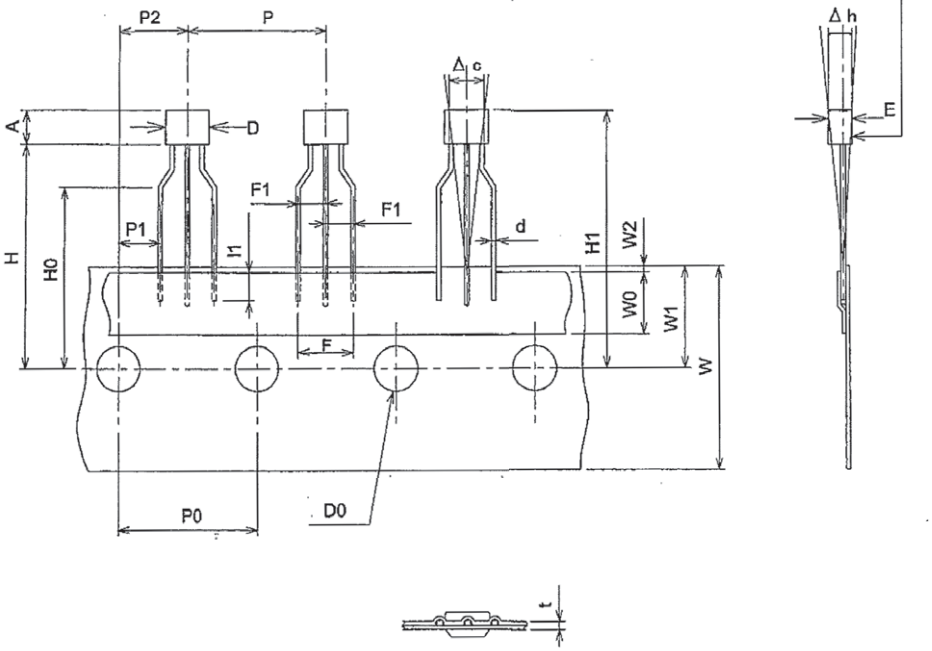

2－2．Taping size standard

Unit:mm

Item	Symbol	Standard	Tolerance	
Work piece outside diameter	D	4.0	±0.2	
	E	2.2	±0.2	
Work piece height	A	3.0	±0.2	
Lead wire diameter	d	0.4×0.4 t	±0.1	
Bonded lead wire	l1	2.5MIN		
Pitch between products	P	12.7	±1.0	
Pitch between perforations	P0	12.7	±0.2	
Total pitch for 21 perforations	P0×20	254.0	±1.0	
Distance between lead wire	F	5.0	+0.8 -0.2	
Lead wire pitch distance	F1	2.5	+0.4 -0.1	
Product inclination	Δh	0	±2.0	
Displacement of perforations	P1	3.85	±0.3	To be measured at a position below the clinch
	P2	6.35	±0.3	
Displacement of tape	W2	0.5MAX		Not to be displaced to the outside of the board

Item	Symbol	Standard	Tolerance
Tape width	W	18.0	+1.0 -0.5
Adhesive tape	W0	6.0	±1.0
Displacement of perforations	W1	9.0	+0.75 -0.5
Work piece bottom surface position	H	19.8	+1.0 -0.3
Lead wire clinch height	H0	16.0	±0.5
Work piece upper limit position	H1	22.8	±1.5
Perforations diameter	D0	φ4.0	±0.2
Tape thickness (total thickness)	t	0.6	±0.2
Product inclination	Δc	0	±1.0

2－3．Taping structure

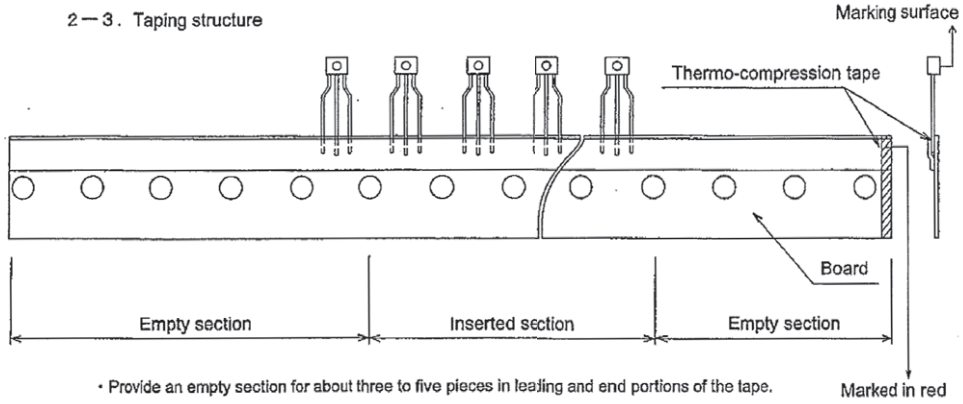

- Provide an empty section for about three to five pieces in leading and end portions of the tape.
- Provide marking in red to the E-side end of the board.

Outline Drawing

2SD1012G-SPA-AC, 2SD1012F-SPA-AC

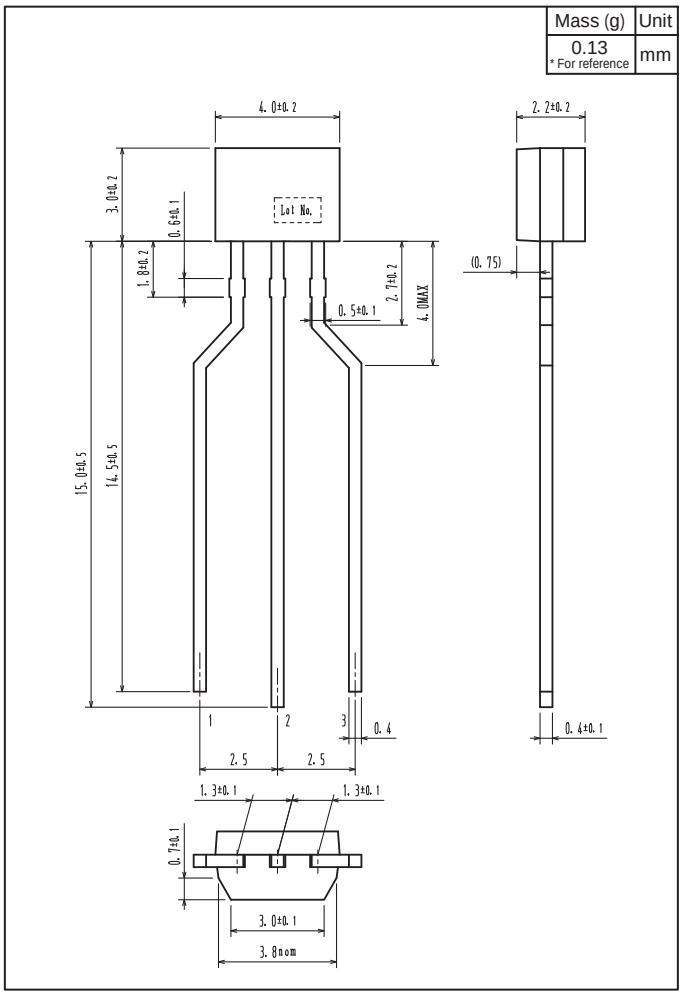

Bag Packing Specification

2SD1012G-SPA, 2SD1012F-SPA

1. Packing Format

Package Name	Maximum Number of devices contained (pcs)				
	Bag	Inner BOX		Outer BOX	
SPA	500	B-1	B-1/2	A-1	A-2
		20,000	10,000	100,000	60,000
	Packing format (Dimensions: mm (external))				
	Inner BOX		Outer BOX		
	B-1	B-1/2	A-1	A-2	
	445×225×55	445×225×55	470×250×300	470×250×190	

2. Bag dimensions

(unit: mm)

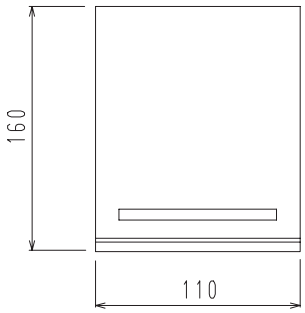

3. Bag label, Inner box label

(unit: mm)

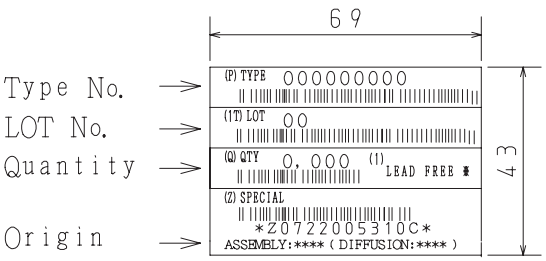

NOTE (1)
The LEAD FREE ※ description shows that the surface treatment of the terminal is lead free.

Label	JEITA Phase
LEAD FREE 3	JEITA Phase 3A
LEAD FREE 4	JEITA Phase 3

4. Outer box label

(unit: mm)

It is a label at the time of factory shipments.
The form of a label may change in physical distribution process.

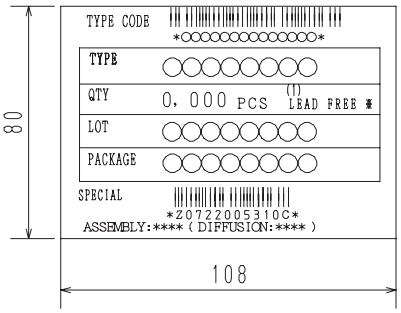

Outline Drawing

2SD1012G-SPA, 2SD1012F-SPA

Mass (g)	Unit
0.13 * For reference	mm

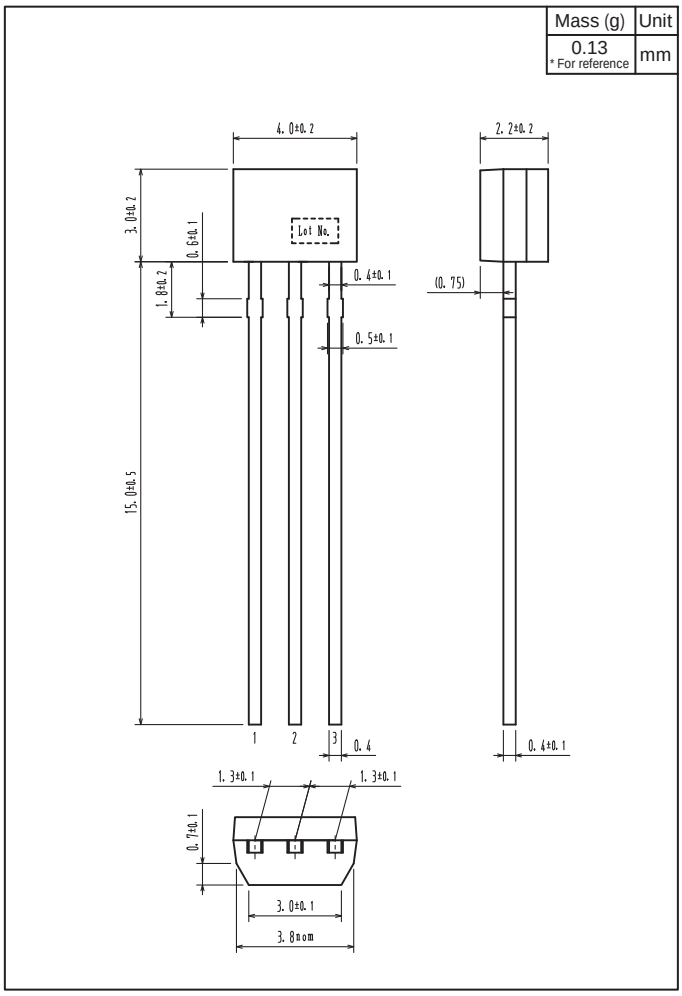

ON Semiconductor and the ON logo are registered trademarks of Semiconductor Components Industries, LLC (SCILLC). SCILLC owns the rights to a number of patents, trademarks, copyrights, trade secrets, and other intellectual property. A listing of SCILLC's product/patent coverage may be accessed at www.onsemi.com/site/pdf/Patent-Marking.pdf. SCILLC reserves the right to make changes without further notice to any products herein. SCILLC makes no warranty, representation or guarantee regarding the suitability of its products for any particular purpose, nor does SCILLC assume any liability arising out of the application or use of any product or circuit, and specifically disclaims any and all liability, including without limitation special, consequential or incidental damages. "Typical" parameters which may be provided in SCILLC data sheets and/or specifications can and do vary in different applications and actual performance may vary over time. All operating parameters, including "Typicals" must be validated for each customer application by customer's technical experts. SCILLC does not convey any license under its patent rights nor the rights of others. SCILLC products are not designed, intended, or authorized for use as components in systems intended for surgical implant into the body, or other applications intended to support or sustain life, or for any other application in which the failure of the SCILLC product could create a situation where personal injury or death may occur. Should Buyer purchase or use SCILLC products for any such unintended or unauthorized application, Buyer shall indemnify and hold SCILLC and its officers, employees, subsidiaries, affiliates, and distributors harmless against all claims, costs, damages, and expenses, and reasonable attorney fees arising out of, directly or indirectly, any claim of personal injury or death associated with such unintended or unauthorized use, even if such claim alleges that SCILLC was negligent regarding the design or manufacture of the part. SCILLC is an Equal Opportunity/Affirmative Action Employer. This literature is subject to all applicable copyright laws and is not for resale in any manner.