Silicon NPN Power Transistors 2SC2740

DESCRIPTION

- With TO-3PN package
- High speed switching
- High V_{CBO}
- Low saturation voltage

APPLICATIONS

- For high speed switching applications

PINNING

PIN	DESCRIPTION
1	Base
2	Collector;connected to mounting base
3	Emitter

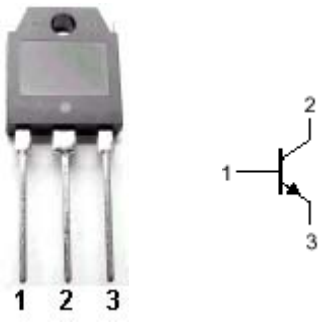

Fig.1 simplified outline (TO-3PN) and symbol

ABSOLUTE MAXIMUM RATINGS(Ta=25℃)

SYMBOL	PARAMETER	CONDITIONS	VALUE	UNIT
V_{CBO}	Collector-base voltage	Open emitter	500	V
V_{CEO}	Collector-emitter voltage	Open base	400	V
V_{EBO}	Emitter-base voltage	Open collector	7	V
I_C	Collector current		10	A
I_{CM}	Collector current-Peak		20	A
I_B	Base current		5	A
P_C	Collector power dissipation	T_C=25℃	100	W
		T_a=25℃	2.5	
T_j	Junction temperature		150	℃
T_{stg}	Storage temperature		-55~150	℃

Silicon NPN Power Transistors 2SC2740

CHARACTERISTICS

Tj=25℃ unless otherwise specified

SYMBOL	PARAMETER	CONDITIONS	MIN	TYP.	MAX	UNIT
$V_{CEO(SUS)}$	Collector-emitter sustaining voltage	I_C=0.2A ;L=25mH	400			V
$V_{CE(sat)}$	Collector-emitter saturation voltage	I_C=5A; I_B=1A			1.0	V
$V_{BE(sat)}$	Base-emitter saturation voltage	I_C=5A; I_B=1A			1.5	V
I_{CBO}	Collector cut-off current	V_{CB}=500V I_E=0			100	μA
I_{EBO}	Emitter cut-off current	V_{EB}=5V; I_C=0			100	μA
h_{FE-1}	DC current gain	I_C=0.1A ; V_{CE}=5V	15			
h_{FE-2}	DC current gain	I_C=5A ; V_{CE}=5V	8			
f_T	Transition frequency	I_C=0.5A ; V_{CE}=10V		11		MHz

Switching times

t_{on}	Turn-on time	V_{CC}=10V I_C=5A; I_{B1}=-I_{B2}=1A			1.0	μs
t_{stg}	Storage time				2.5	μs
t_f	Fall time				1.0	μs

Silicon NPN Power Transistors 2SC2740

PACKAGE OUTLINE

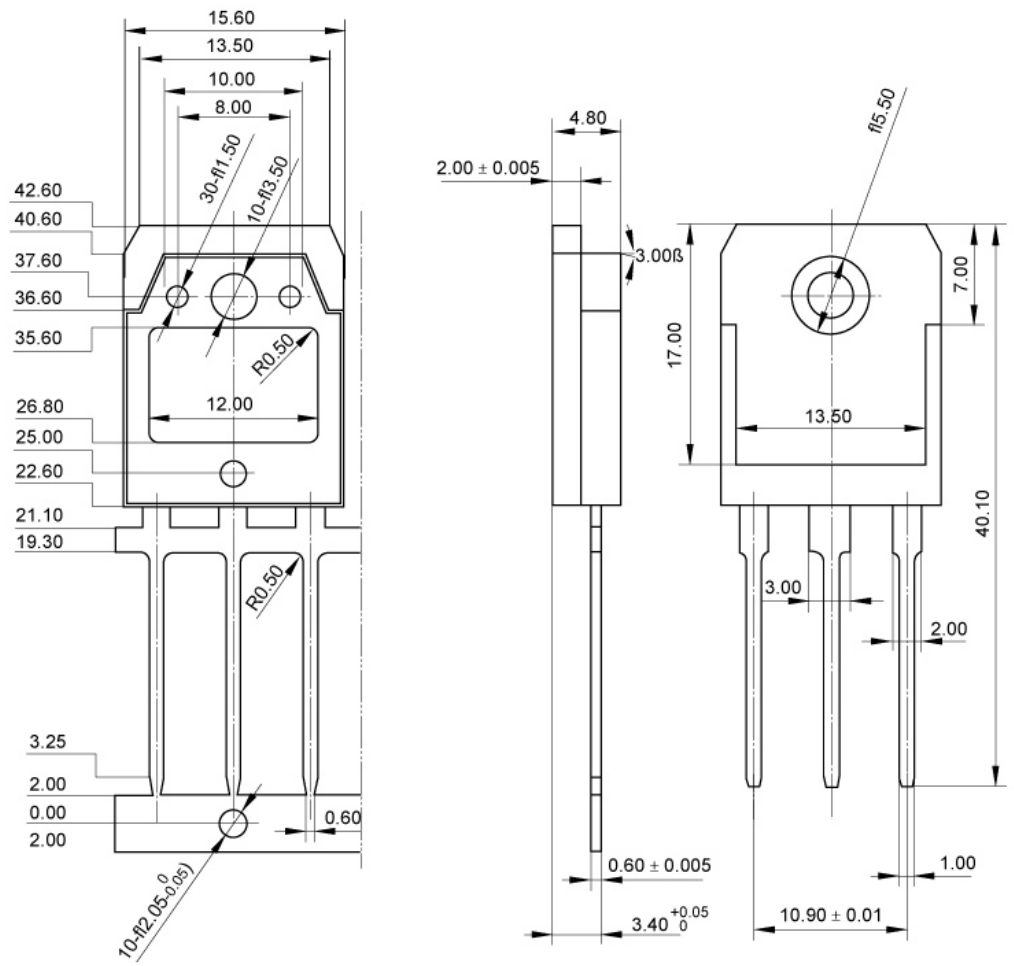

Fig.2 outline dimensions