JIANGSU CHANGJIANG ELECTRONICS TECHNOLOGY CO., LTD

TO-92 Plastic-Encapsulate Transistors

TO-92

1. EMITTER
2. COLLECTOR
3. BASE

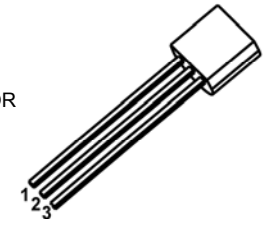

2SC2551 TRANSISTOR (**NPN**)

FEATURES

- **High voltage**
- **Low saturation voltage**
- **Small collector output capacitance**
- **Complementary to 2SA1091**

MAXIMUM RATINGS (T_A=25℃ unless otherwise noted)

Symbol	Parameter	Value	Unit
V_{CBO}	Collector-Base Voltage	300	V
V_{CEO}	Collector-Emitter Voltage	300	V
V_{EBO}	Emitter-Base Voltage	6	V
I_C	Collector Current -Continuous	100	mA
P_C	Collector power dissipation	400	mW
T_j	Junction Temperature	150	℃
T_{stg}	Storage Temperature	-55-150	℃

ELECTRICAL CHARACTERISTICS (Tamb=25℃ unless otherwise specified)

Parameter	Symbol	Test conditions	Min	Typ	Max	Unit
Collector-base breakdown voltage	$V_{(BR)CBO}$	Ic=100uA, I_E=0	300			V
Collector-emitter breakdown voltage	$V_{(BR)CEO}$	Ic=1mA, I_B=0	300			V
Emitter-base breakdown voltage	$V_{(BR)EBO}$	I_E=100μA, I_C=0	6			V
Collector cut-off current	I_{CBO}	V_{CB}=300V, I_E=0			0.1	μA
Emitter cut-off current	I_{EBO}	V_{EB}=6V, I_C=0			0.1	μA
DC current gain	$h_{FE(1)}$	V_{CE}=10V, I_C=20mA	30		150	
	$h_{FE(2)}$	V_{CE}=10V, I_C=1mA	20			
Collector-emitter saturation voltage	$V_{CE(sat)}$	I_C=20mA, I_B=2mA			0.5	V
Base-emitter saturation voltage	$V_{BE(sat)}$	I_C=20mA, I_B=2mA			1.2	V
Transition frequency	f_T	V_{CE}=10V, I_C=20mA		80		MHz
Collector output capacitance	C_{ob}	V_{CB}=20V,I_E=0,f=1MHz			4	pF

CLASSIFICATION OF $h_{FE(1)}$

Rank	R	O
Range	30-90	50-150

TO-92 Package Outline Dimensions

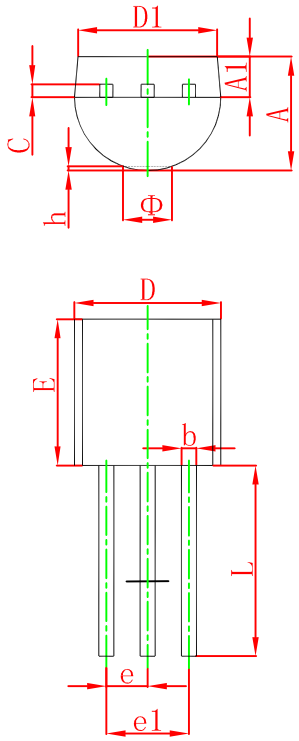

Symbol	Dimensions In Millimeters		Dimensions In Inches	
	Min	Max	Min	Max
A	3.300	3.700	0.130	0.146
A1	1.100	1.400	0.043	0.055
b	0.380	0.550	0.015	0.022
c	0.360	0.510	0.014	0.020
D	4.300	4.700	0.169	0.185
D1	3.430		0.135	
E	4.300	4.700	0.169	0.185
e	1.270 TYP		0.050 TYP	
e1	2.440	2.640	0.096	0.104
L	14.100	14.500	0.555	0.571
Φ		1.600		0.063
h	0.000	0.380	0.000	0.015

TO-92 Suggested Pad Layout

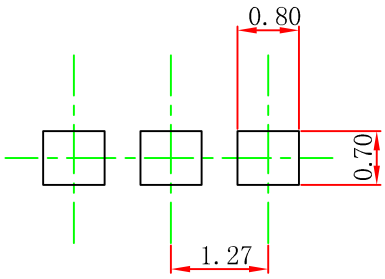

Note:
1.Controlling dimension:in millimeters.
2.General tolerance:± 0.05mm.
3.The pad layout is for reference purposes only.

NOTICE

JCET reserve the right to make modifications,enhancements, improvements, corrections or other changes without further notice to any product herein.JCET does not assume any liability arising out of the application or use of any product described herein.

TO-92 PACKAGE TAPEING DIMENSION

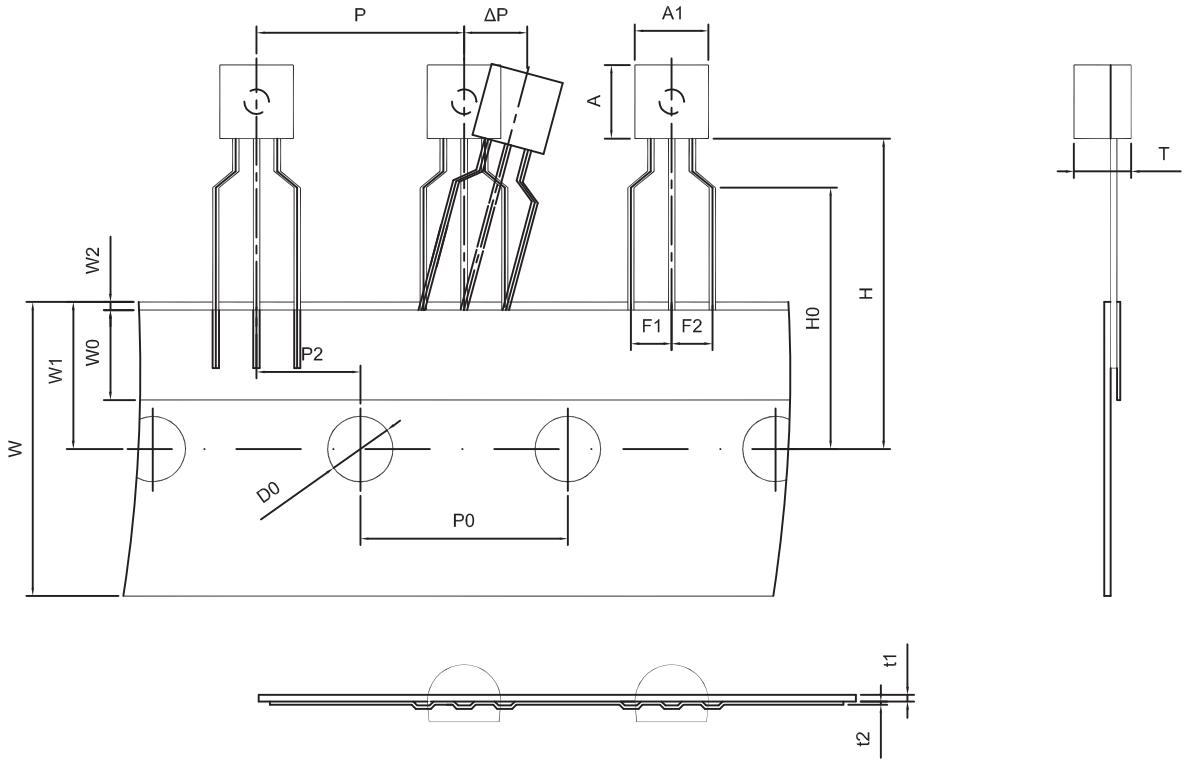

Dimiensions are in millimeter								
A1	A	T	P	P0	P2	F1	F2	W
4.5	4.5	3.5	12.7	12.7	6.35	2.5	2.5	18.0
W0	W1	W2	H	H0	D0	t1	t2	ΔP
6.0	9.0	1.0 MAX.	19.0	16.0	4.0	0.4	0.2	0

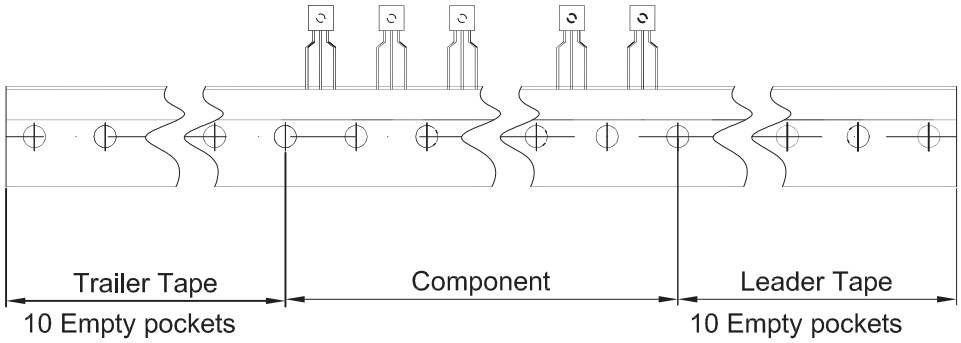

Package	Box	Box Size(mm)	Carton	Carton Size(mm)
TO-92	2000 pcs	333×162×43	20,000 pcs	350×340×250