Silicon PNP Power Transistors 2SB925 2SB925A

DESCRIPTION

·With TO-220C package
·Low collector saturation voltage
·High speed switching

APPLICATIONS

·For low voltage switching applications

PINNING

PIN	DESCRIPTION
1	Emitter
2	Collector;connected to mounting base
3	Base

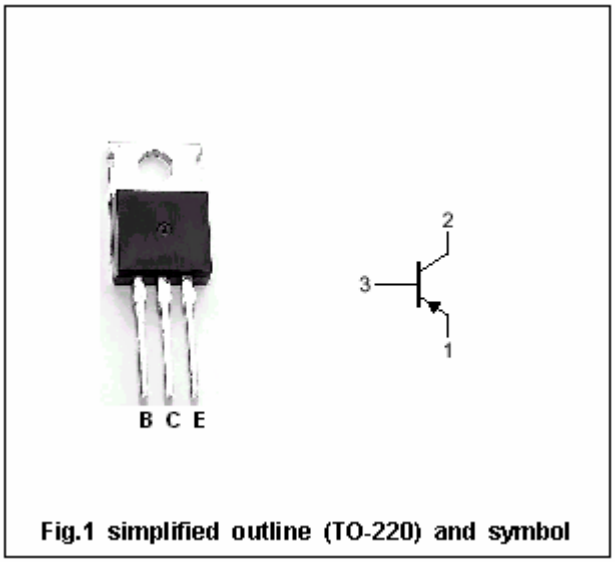

Fig.1 simplified outline (TO-220) and symbol

Absolute maximum ratings(Ta=25□)

SYMBOL	PARAMETER		CONDITIONS	VALUE	UNIT
V_{CBO}	Collector-base voltage	2SB925	Open emitter	-40	V
		2SB925A		-50	
V_{CEO}	Collector-emitter voltage	2SB925	Open base	-20	V
		2SB925A		-40	
V_{EBO}	Emitter-base voltage		Open collector	-5	V
I_C	Collector current (DC)			-7	A
I_{CM}	Collector current-Peak			-12	A
P_C	Collector power dissipation		T_C=25□	30	W
T_j	Junction temperature			150	□
T_{stg}	Storage temperature			-50~150	□

CHARACTERISTICS

Tj=25□ unless otherwise specified

SYMBOL	PARAMETER		CONDITIONS	MIN	TYP.	MAX	UNIT
$V_{(BR)CEO}$	Collector-emitter breakdown voltage	2SB925	I_C=-10mA; I_B=0	-20			V
		2SB925A		-40			
V_{CEsat}	Collector-emitter saturation voltage		I_C=-5A; I_B=-0.16A			-0.6	V
V_{BEsat}	Base-emitter saturation voltage		I_C=-5A; I_B=-0.16A			-1.5	V
I_{CBO}	Collector cut-off current	2SB925	V_{CB}=-40V; I_E=0			-50	μA
		2SB925A	V_{CB}=-50V; I_E=0				
I_{EBO}	Emitter cut-off current		V_{EB}=-5V; I_C=0			-50	μA
h_{FE-1}	DC current gain		I_C=-0.1A ; V_{CE}=-2V	45			
h_{FE-2}	DC current gain		I_C=-2A ; V_{CE}=-2V	60		260	
C_{ob}	Output capacitance		I_E=0 ; V_{CB}=-10V;f=1MHz		140		pF
f_T	Transition frequency		I_C=-0.5A ; V_{CE}=-10V		150		MHz
Switching times							
t_{on}	Turn-on time		I_C=-2A ; I_{B1}=-I_{B2}=-66mA		0.1		μs
t_{stg}	Storage time				0.5		μs
t_f	Fall time				0.1		μs

◆ h_{FE-2} Classifications

R	Q	P
60-120	90-180	130-260

PACKAGE OUTLINE

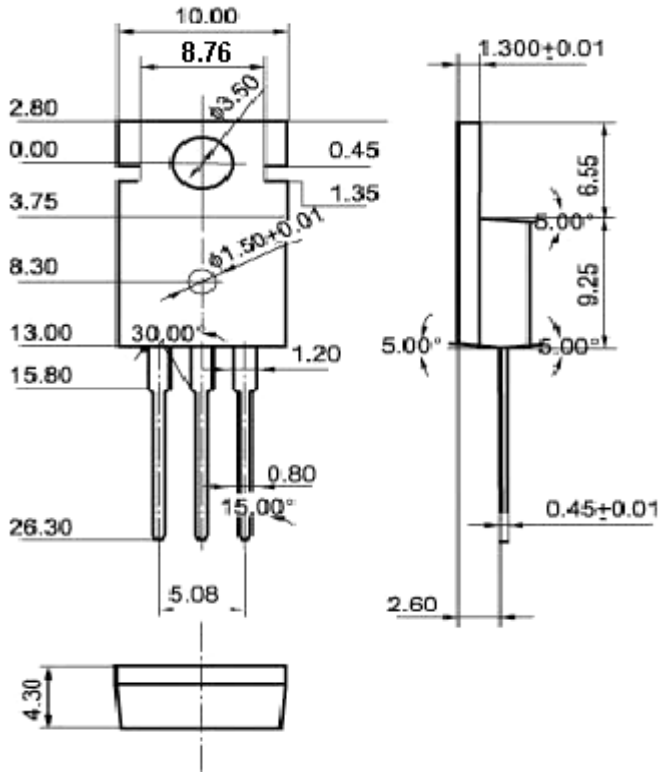

Fig.2 Outline dimensions (unindicated tolerance:±0.10mm)