Ordering number : EN 722G

SANYO

No.722G

2SB828/2SD1064

PNP/NPN Epitaxial Planar Silicon Transistors

50V/12A Switching Applications

Applications

· Relay drivers, high-speed inverters, converters, and other general high-current switching applications.

Features

· Low-saturation collector-to-emitter voltage : $V_{CE(sat)} = -0.5V$ (PNP), 0.4V (NPN) max.
· Wide ASO leading to high resistance to breakdown.

( ) : 2SB828

Absolute Maximum Ratings at Ta = 25°C

				unit
Collector-to-Base Voltage	V_{CBO}		(−)60	V
Collector-to-Emitter Voltage	V_{CEO}		(−)50	V
Emitter-to-Base Voltage	V_{EBO}		(−)6	V
Collector Current	I_C		(−)12	A
Collector Current (Pulse)	I_{CP}		(−)17	A
Collector Dissipation	P_C	Tc = 25°C	80	W
Junction Temperature	Tj		150	°C
Storage Temperature	Tstg		−55 to +150	°C

Electrical Characteristics at Ta = 25°C

			min	typ	max	unit
Collector Cutoff Current	I_{CBO}	V_{CB} = (−)40V, I_E = 0			(−)0.1	mA
Emitter Cutoff Current	I_{EBO}	V_{EB} = (−)4V, I_C = 0			(−)0.1	mA
DC Current Gain	$h_{FE}(1)$	V_{CE} = (−)2V, I_C = (−)1A	70※		280※	
	$h_{FE}(2)$	V_{CE} = (−)2V, I_C = (−)5A	30			
Gain Bandwidth Product	f_T	V_{CE} = (−)5V, I_C = (−)1A		10		MHz
C-E Saturation Voltage	$V_{CE(sat)}$	I_C = (−)6A, I_B = (−)0.3A			0.4 (−0.5)	V
C-B Breakdown Voltage	$V_{(BR)CBO}$	I_C = (−)1mA, I_E = 0	(−)60			V
C-E Breakdown Voltage	$V_{(BR)CEO}$	I_C = (−)1mA, R_{BE} = ∞	(−)50			V
E-B Breakdown Voltage	$V_{(BR)EBO}$	I_E = (−)1mA, I_C = 0	(−)6			V
Rise Time	t_{on}	See specified Test Circuit.		(0.2)0.1		μs
Storage Time	t_{stg}	〃		(0.4)1.2		μs
Fall Time	t_f	〃		(0.1)0.05		μs

※ : The 2SB828/2SD1064 are classified by 1A h_{FE} as follows :

70 Q 140	100 R 200	140 S 280

Switching Time Test Circuit

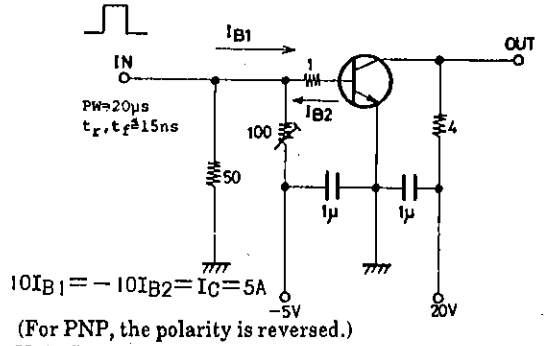

(For PNP, the polarity is reversed.)
Unit (Resistance : Ω, Capacitance : F)

Package Dimensions 2022A
(unit : mm)

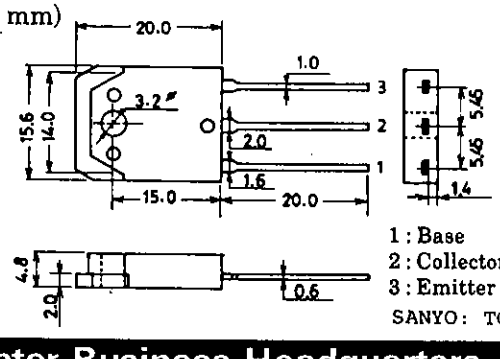

1 : Base
2 : Collector
3 : Emitter
SANYO : TO3PB

SANYO Electric Co.,Ltd. Semiconductor Business Headquarters
TOKYO OFFICE Tokyo Bldg., 1-10, 1 Chome, Ueno, Taito-ku, TOKYO, 110 JAPAN

I_C – V_{CE}

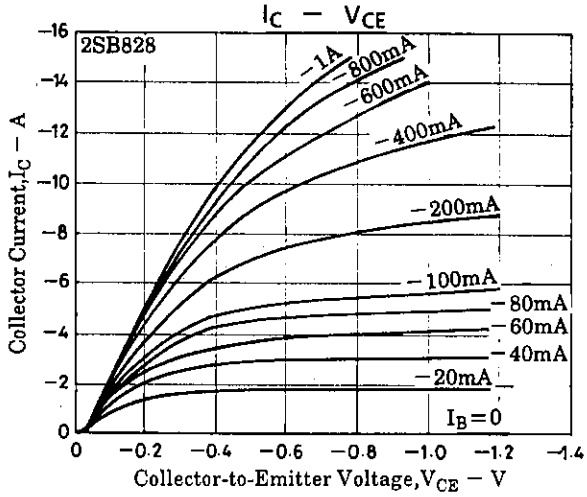

I_C – V_{CE}

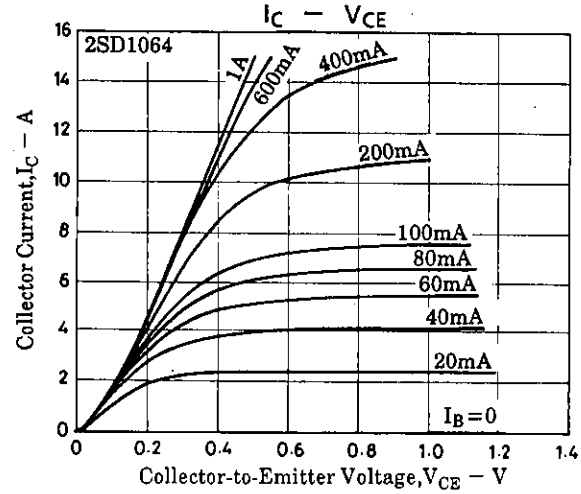

I_C – V_{BE}

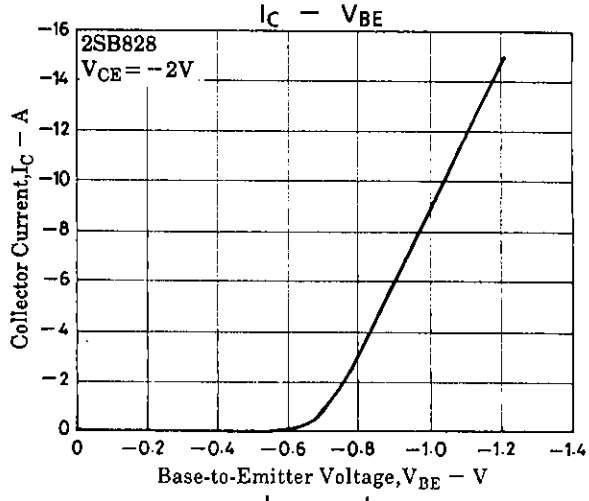

I_C – V_{BE}

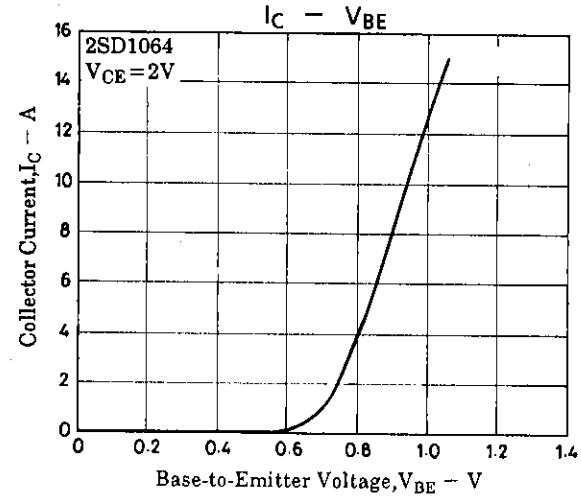

h_{FE} – I_C

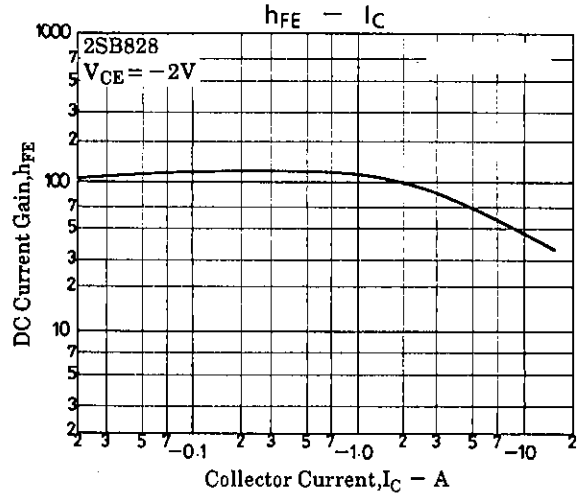

h_{FE} – I_C

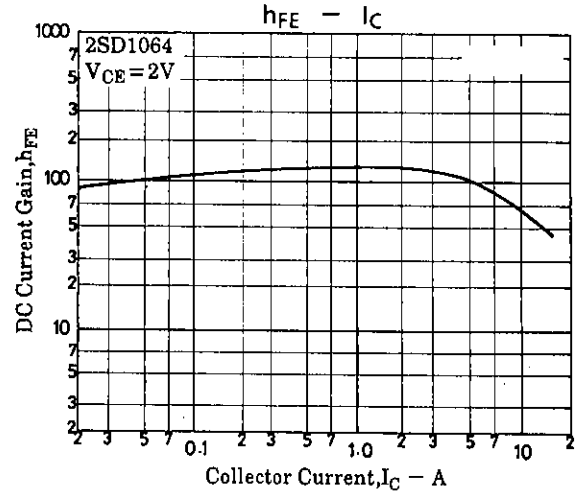

$V_{CE(sat)}$ – I_C

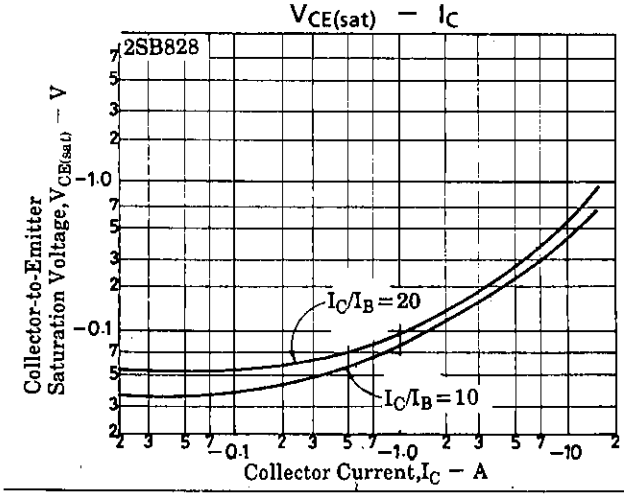

$V_{CE(sat)}$ – I_C

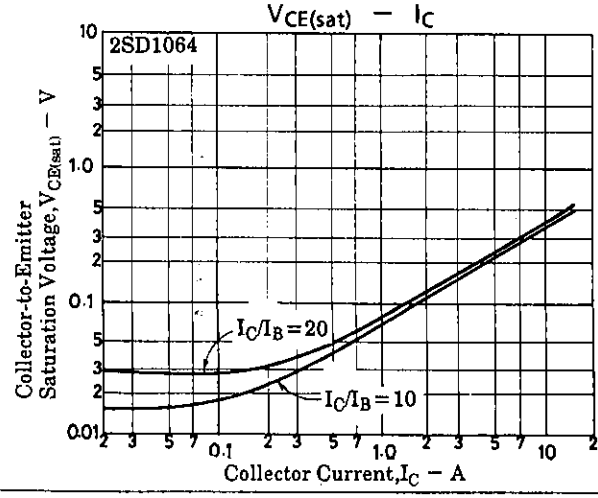

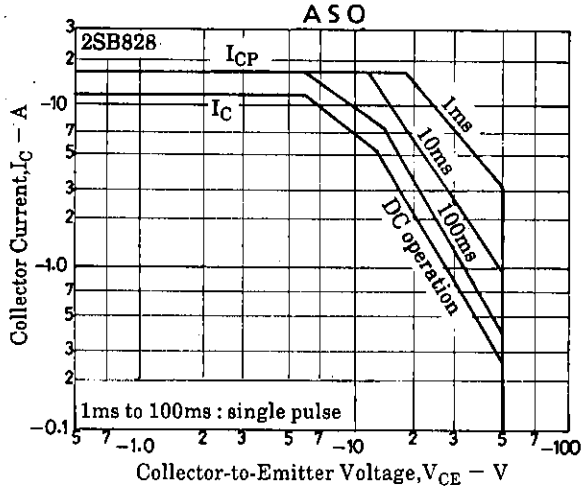

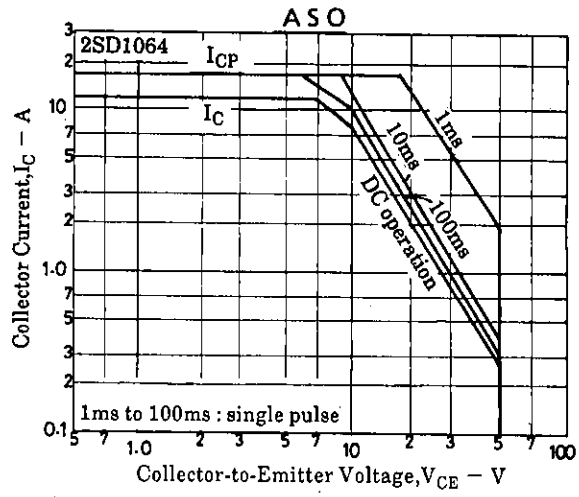

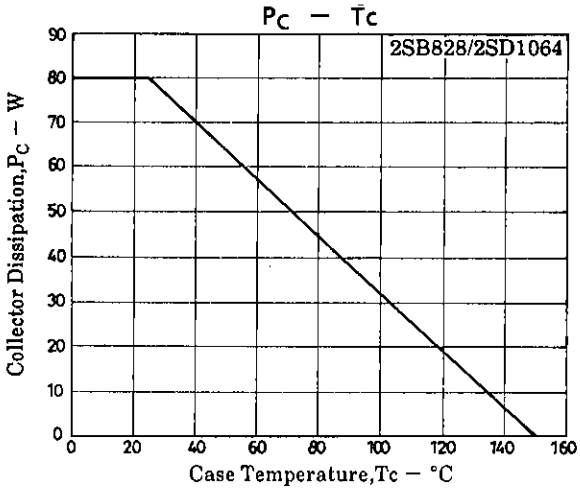

■ No products described or contained herein are intended for use in surgical implants, life-support systems, aerospace equipment, nuclear power control systems, vehicles, disaster/crime-prevention equipment and the like, the failure of which may directly or indirectly cause injury, death or property loss.

■ Anyone purchasing any products described or contained herein for an above-mentioned use shall:
① Accept full responsibility and indemnify and defend SANYO ELECTRIC CO., LTD., its affiliates, subsidiaries and distributors and all their officers and employees, jointly and severally, against any and all claims and litigation and all damages, cost and expenses associated with such use:
② Not impose any responsibility for any fault or negligence which may be cited in any such claim or litigation on SANYO ELECTRIC CO., LTD., its affiliates, subsidiaries and distributors or any of their officers and employees jointly or severally.

■ Information (including circuit diagrams and circuit parameters) herein is for example only; it is not guaranteed for volume production. SANYO believes information herein is accurate and reliable, but no guarantees are made or implied regarding its use or any infringements of intellectual property rights or other rights of third parties.

This catalog provides information as of January, 1996. Specifications and information herein are subject to change without notice.