2SB649, 2SB649A

Silicon PNP Epitaxial

HITACHI

Application

Low frequency power amplifier complementary pair with 2SD669/A

Outline

TO-126 MOD

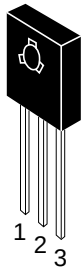

1. Emitter
2. Collector
3. Base

Hitachi semiconductor

Absolute Maximum Ratings (Ta = 25°C)

Item	Symbol	Ratings		Unit
		2SB649	2SB649A	
Collector to base voltage	V_{CBO}	–180	–180	V
Collector to emitter voltage	V_{CEO}	–120	–160	V
Emitter to base voltage	V_{EBO}	–5	–5	V
Collector current	I_C	–1.5	–1.5	A
Collector peak current	$I_{C(peak)}$	–3	–3	A
Collector power dissipation	P_C	1	1	W
	P_C*[1]	20	20	W
Junction temperature	Tj	150	150	°C
Storage temperature	Tstg	–55 to +150	–55 to +150	°C

Note: 1. Value at T_C = 25°C

Electrical Characteristics (Ta = 25°C)

Item	Symbol	2SB649 Min	2SB649 Typ	2SB649 Max	2SB649A Min	2SB649A Typ	2SB649A Max	Unit	Test conditions
Collector to base breakdown voltage	$V_{(BR)CBO}$	–180	—	—	–180	—	—	V	I_C = –1 mA, I_E = 0
Collector to emitter breakdown voltage	$V_{(BR)CEO}$	–120	—	—	–160	—	—	V	I_C = –10 mA, R_{BE} = ∞
Emitter to base breakdown voltage	$V_{(BR)EBO}$	–5	—	—	–5	—	—	V	I_E = –1 mA, I_C = 0
Collector cutoff current	I_{CBO}	—	—	–10	—	—	–10	µA	V_{CB} = –160 V, I_E = 0
DC current transfer ratio	h_{FE1}*[1]	60	—	320	60	—	200		V_{CE} = –5 V, I_C = –150 mA
	h_{FE2}	30	—	—	30	—	—		V_{CE} = –5 V, I_C = –500 mA*[2]
Collector to emitter saturation voltage	$V_{CE(sat)}$	—	—	–1	—	—	–1	V	I_C = –500 mA, I_B = –50 mA
Base to emitter voltage	V_{BE}	—	—	–1.5	—	—	–1.5	V	V_{CE} = –5 V, I_C = –150 mA
Gain bandwidth product	f_T	—	140	—	—	140	—	MHz	V_{CE} = –5 V, I_C = –150 mA
Collector output capacitance	Cob	—	27	—	—	27	—	pF	V_{CB} = –10 V, I_E = 0, f = 1 MHz

Notes: 1. The 2SB649 and 2SB649A are grouped by h_{FE1} as follows.
2. Pulse test

	B	C	D
2SB649	60 to 120	100 to 200	160 to 320
2SB649A	60 to 120	100 to 200	—

Maximum Collector Dissipation Curve

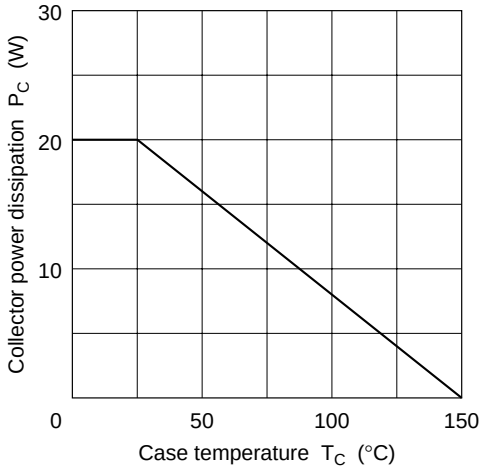

Area of Safe Operation

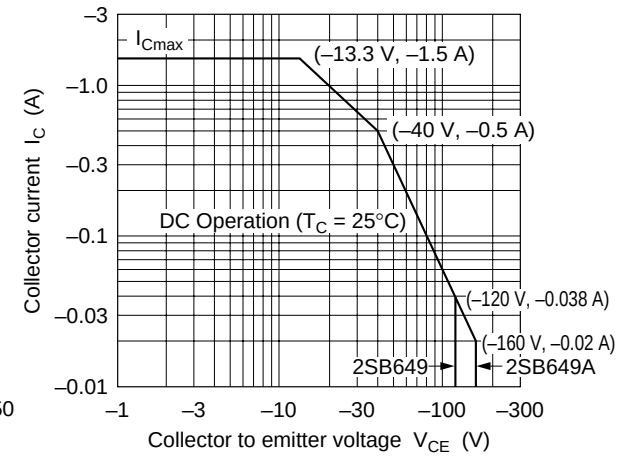

Typical Output Characteristics

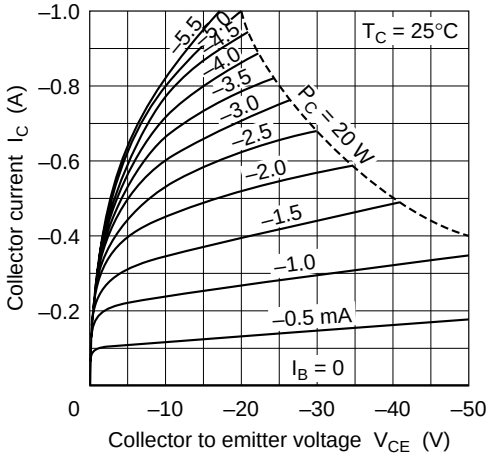

Typical Transfer Characteristics

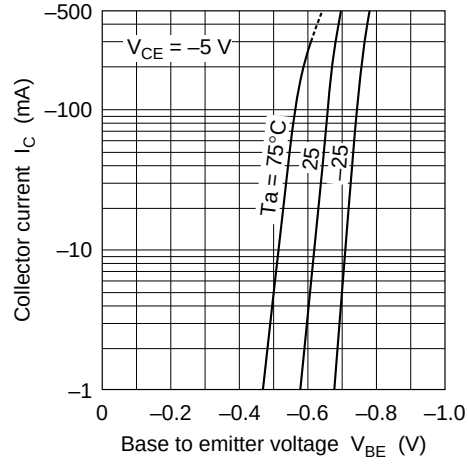

DC Current Transfer Ratio
vs. Collector Current

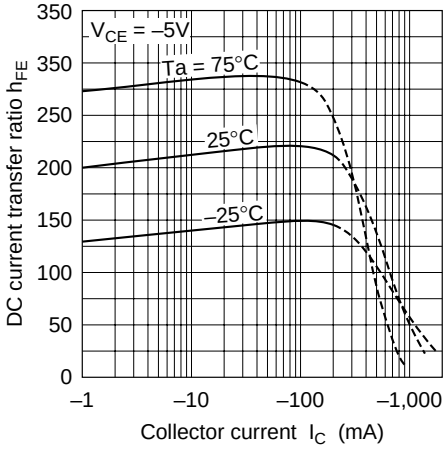

Collector to Emitter Saturation
Voltage vs. Collector Current

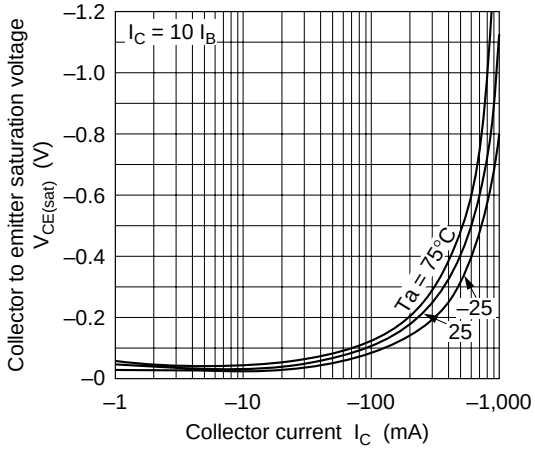

Base to Emitter Saturation Voltage
vs. Collector Current

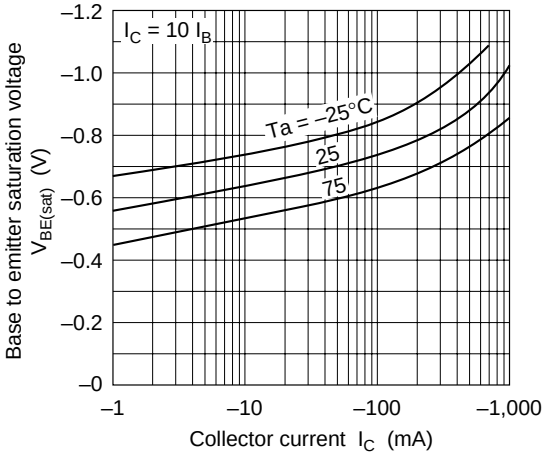

Gain Bandwidth Product
vs. Collector Current

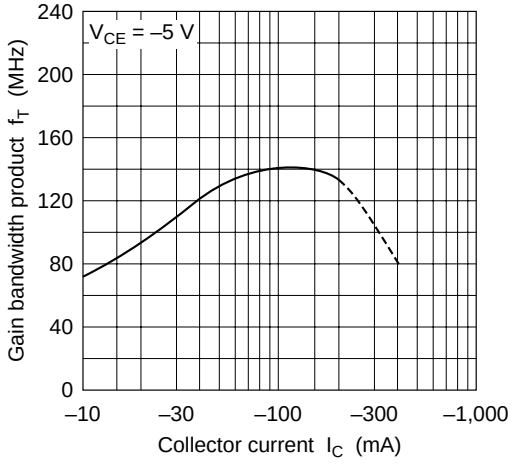

Collector Output Capacitance vs.
Collector to Base Voltage

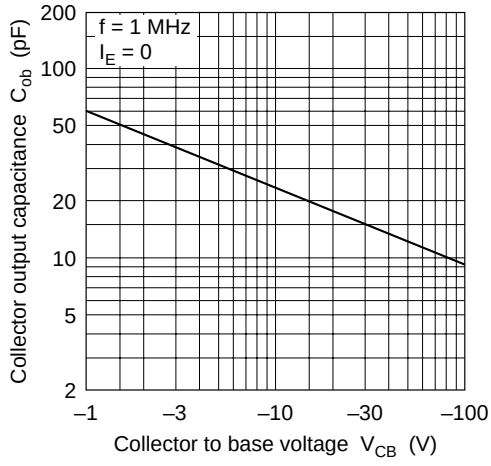

Unit: mm

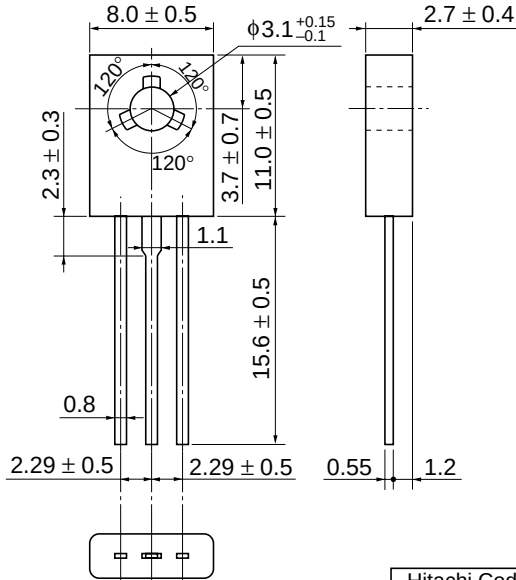

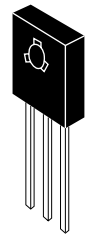

Hitachi Code	TO-126 Mod
JEDEC	—
EIAJ	—
Weight (reference value)	0.67 g

Cautions

1. Hitachi neither warrants nor grants licenses of any rights of Hitachi's or any third party's patent, copyright, trademark, or other intellectual property rights for information contained in this document. Hitachi bears no responsibility for problems that may arise with third party's rights, including intellectual property rights, in connection with use of the information contained in this document.
2. Products and product specifications may be subject to change without notice. Confirm that you have received the latest product standards or specifications before final design, purchase or use.
3. Hitachi makes every attempt to ensure that its products are of high quality and reliability. However, contact Hitachi's sales office before using the product in an application that demands especially high quality and reliability or where its failure or malfunction may directly threaten human life or cause risk of bodily injury, such as aerospace, aeronautics, nuclear power, combustion control, transportation, traffic, safety equipment or medical equipment for life support.
4. Design your application so that the product is used within the ranges guaranteed by Hitachi particularly for maximum rating, operating supply voltage range, heat radiation characteristics, installation conditions and other characteristics. Hitachi bears no responsibility for failure or damage when used beyond the guaranteed ranges. Even within the guaranteed ranges, consider normally foreseeable failure rates or failure modes in semiconductor devices and employ systemic measures such as fail-safes, so that the equipment incorporating Hitachi product does not cause bodily injury, fire or other consequential damage due to operation of the Hitachi product.
5. This product is not designed to be radiation resistant.
6. No one is permitted to reproduce or duplicate, in any form, the whole or part of this document without written approval from Hitachi.
7. Contact Hitachi's sales office for any questions regarding this document or Hitachi semiconductor products.

HITACHI

Hitachi, Ltd.
Semiconductor & Integrated Circuits.
Nippon Bldg., 2-6-2, Ohte-machi, Chiyoda-ku, Tokyo 100-0004, Japan
Tel: Tokyo (03) 3270-2111 Fax: (03) 3270-5109

URL
NorthAmerica : http:semiconductor.hitachi.com/
Europe : http://www.hitachi-eu.com/hel/ecg
Asia (Singapore) : http://www.has.hitachi.com.sg/grp3/sicd/index.htm
Asia (Taiwan) : http://www.hitachi.com.tw/E/Product/SICD_Frame.htm
Asia (HongKong) : http://www.hitachi.com.hk/eng/bo/grp3/index.htm
Japan : http://www.hitachi.co.jp/Sicd/indx.htm

For further information write to:

Hitachi Semiconductor
(America) Inc.
179 East Tasman Drive,
San Jose,CA 95134
Tel: <1> (408) 433-1990
Fax: <1>(408) 433-0223

Hitachi Europe GmbH
Electronic components Group
Dornacher Straße 3
D-85622 Feldkirchen, Munich
Germany
Tel: <49> (89) 9 9180-0
Fax: <49> (89) 9 29 30 00

Hitachi Europe Ltd.
Electronic Components Group.
Whitebrook Park
Lower Cookham Road
Maidenhead
Berkshire SL6 8YA, United Kingdom
Tel: <44> (1628) 585000
Fax: <44> (1628) 778322

Hitachi Asia Pte. Ltd.
16 Collyer Quay #20-00
Hitachi Tower
Singapore 049318
Tel: 535-2100
Fax: 535-1533

Hitachi Asia Ltd.
Taipei Branch Office
3F, Hung Kuo Building. No.167,
Tun-Hwa North Road, Taipei (105)
Tel: <886> (2) 2718-3666
Fax: <886> (2) 2718-8180

Hitachi Asia (Hong Kong) Ltd.
Group III (Electronic Components)
7/F., North Tower, World Finance Centre,
Harbour City, Canton Road, Tsim Sha Tsui,
Kowloon, Hong Kong
Tel: <852> (2) 735 9218
Fax: <852> (2) 730 0281
Telex: 40815 HITEC HX

Copyright ' Hitachi, Ltd., 1999. All rights reserved. Printed in Japan.