Silicon PNP Power Transistors 2SB1009

DESCRIPTION

·With TO-126 package
·Complement to type 2SD1380

APPLICATIONS

·For use in low frequency power amplifier applications

PINNING

PIN	DESCRIPTION
1	Emitter
2	Collector;connected to mounting base
3	Base

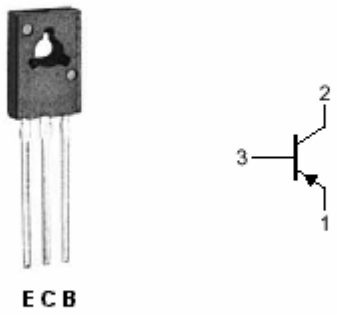

Fig.1 simplified outline (TO-126) and symbol

Absolute maximum ratings(Ta=25□)

SYMBOL	PARAMETER	CONDITIONS	VALUE	UNIT
V_{CBO}	Collector-base voltage	Open emitter	-40	V
V_{CEO}	Collector-emitter voltage	Open base	-32	V
V_{EBO}	Emitter-base voltage	Open collector	-5	V
I_C	Collector current (DC)		-2	A
P_D	Total power dissipation	T_a=25□	0.1	W
		T_C=25□	10	
T_j	Junction temperature		150	□
T_{stg}	Storage temperature		-55~150	□

Silicon PNP Power Transistors 2SB1009

CHARACTERISTICS

Tj=25□ unless otherwise specified

SYMBOL	PARAMETER	CONDITIONS	MIN	TYP.	MAX	UNIT
$V_{(BR)CEO}$	Collector-emitter breakdown voltage	I_C=-10mA ;I_B=0	-32			V
V_{CEsat}	Collector-emitter saturation voltage	I_C=-2.0A; I_B=-0.2A			-0.8	V
V_{BEsat}	Base-emitter saturation voltage	I_C=-2.0A ;I_B=-0.2A			-2.0	V
I_{CBO}	Collector cut-off current	V_{CB}=-20V; I_E=0			-1	μA
I_{EBO}	Emitter cut-off current	V_{EB}=-3V; I_C=0			-1	μA
h_{FE-1}	DC current gain	I_C=-20mA ; V_{CE}=-5V	40			
h_{FE-2}	DC current gain	I_C=-500mA ; V_{CE}=-5V	82		390	
f_T	Transition frequency	I_C=-500mA ; V_{CE}=-5V		100		MHz
C_{OB}	Collector output capacitance	f=1MHz ; V_{CB}=-10V		50		pF

PACKAGE OUTLINE

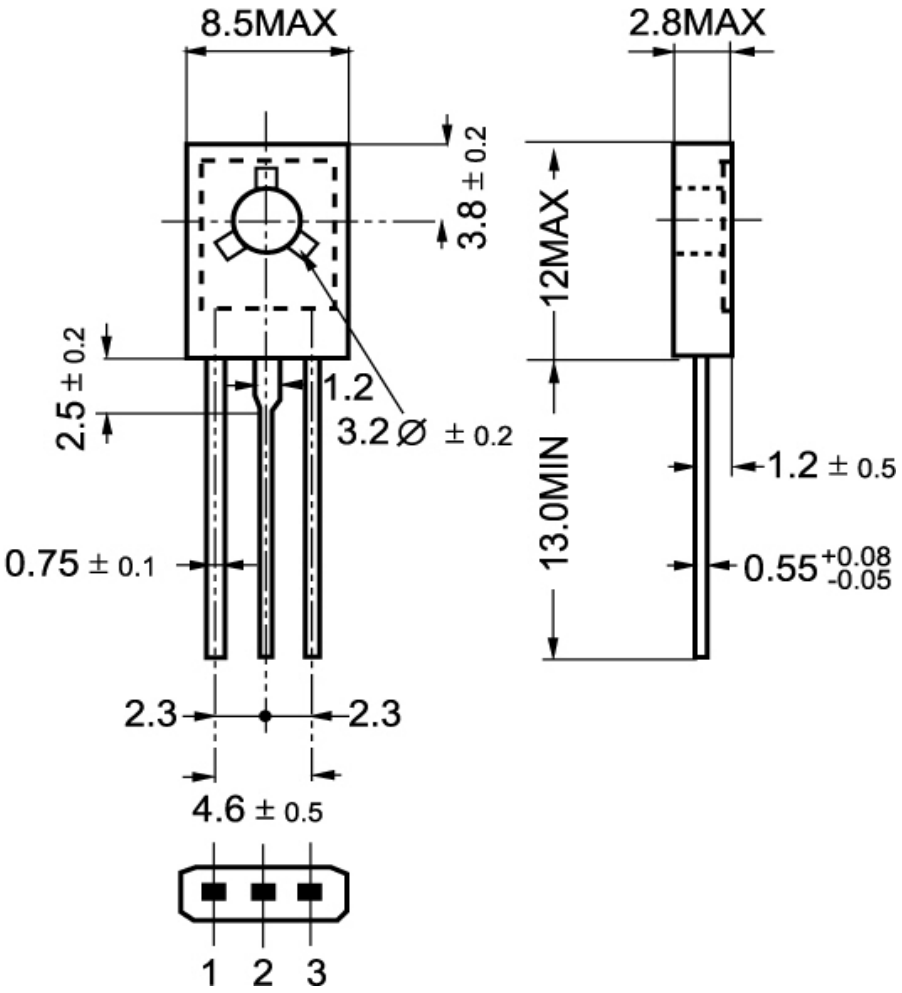

Fig.2 Outline dimensions