Ordering number: EN3481

SANYO

No.3481

2SA1778

PNP Epitaxial Planar Silicon Transistor

VHF Converter, Local Oscillator Applications

Features

- High power gain (PG = 13dB typ ; f = 0.4GHz)
- High cutoff frequency (f_T = 1.2GHz typ)
- Low C_{ob} (C_{ob} = 1.0pF typ).
- Complementary pair with the 2SC4269

Absolute Maximum Ratings at Ta = 25°C

			unit
Collector to Base Voltage	V_{CBO}	−15	V
Collector to Emitter Voltage	V_{CEO}	−15	V
Emitter to Base Voltage	V_{EBO}	−3	V
Collector Current	I_C	−50	mA
Collector Dissipation	P_C	250	mW
Junction Temperature	Tj	150	°C
Storage Temperature	Tstg	−55 to +150	°C

Electrical Characteristics at Ta = 25°C

			min	typ	max	unit
Collector Cutoff Current	I_{CBO}	V_{CB} = −15V, I_E = 0			−0.1	μA
Emitter Cutoff Current	I_{EBO}	V_{EB} = −2V, I_C = 0			−0.1	μA
DC Current Gain	h_{FE}	V_{CE} = −10V, I_C = −5mA	40※		200※	
Gain-Bandwidth Product	f_T	V_{CE} = −10V, I_C = −5mA	0.6	1.2		GHz
Output Capacitance	C_{ob}	V_{CB} = −10V, f = 1MHz		1.0	1.5	pF
Reverse Transfer Capacitance	C_{re}	V_{CB} = −10V, f = 1MHz		0.75		pF
Power Gain	PG	V_{CE} = −10V, I_C = −5mA, f = 0.4GHz		13		dB
Noise Figure	NF	V_{CE} = −10V, I_C = −3mA, f = 0.4GHz		2.5		dB

※ : The 2SA1778 are classified by 5mA h_{FE} as follows :

40 2 80	60 3 120	100 4 200

Note

Marking : HS

h_{FE} rank : 2,3,4

Package Dimensions 2018A

(unit : mm)

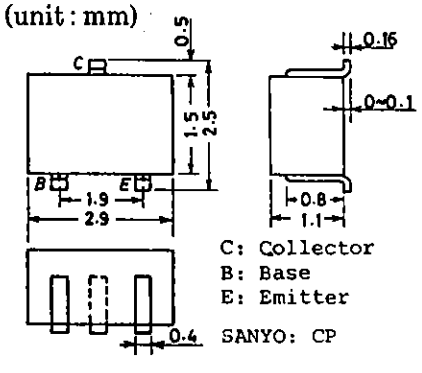

PG, NF Test Circuit

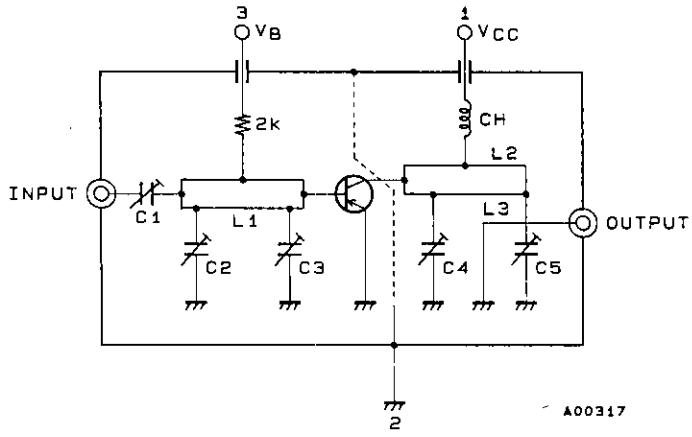

Unit (Resistance : Ω)

	400MHz
C1	~20pF
C2	~10pF
C3	~10pF
C4	~20pF
C5	~30pF
L1	2φ, 1≒40mm 2/3t
L2	2φ, 1≒40mm 2/3t
L3	1φ, 1≒40mm 1/2t
CH	3t+ Bead core

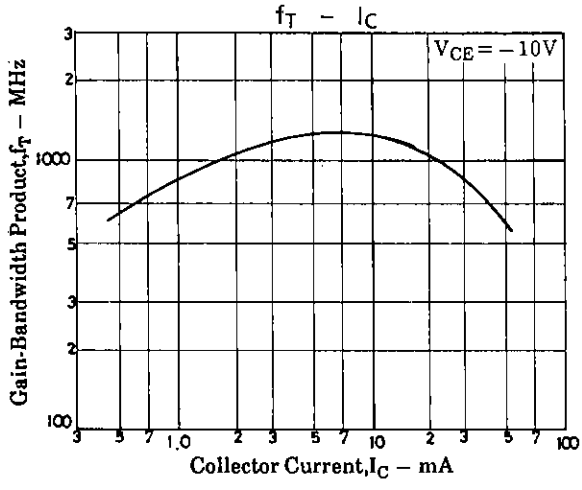

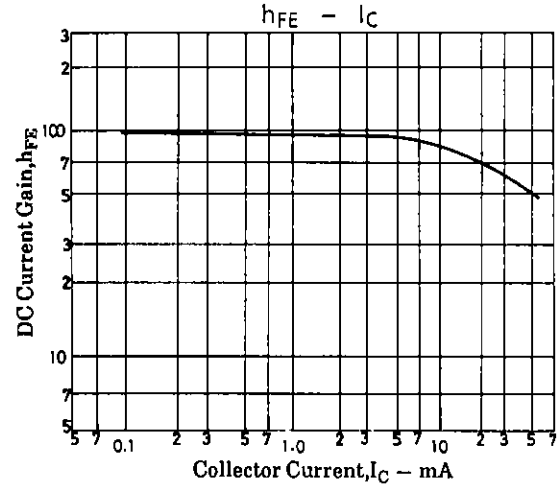

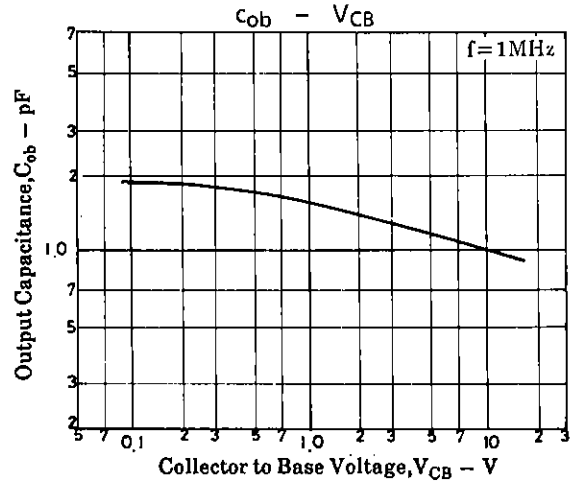

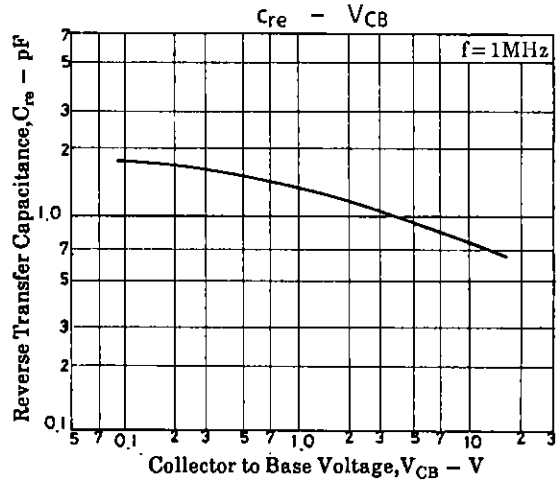

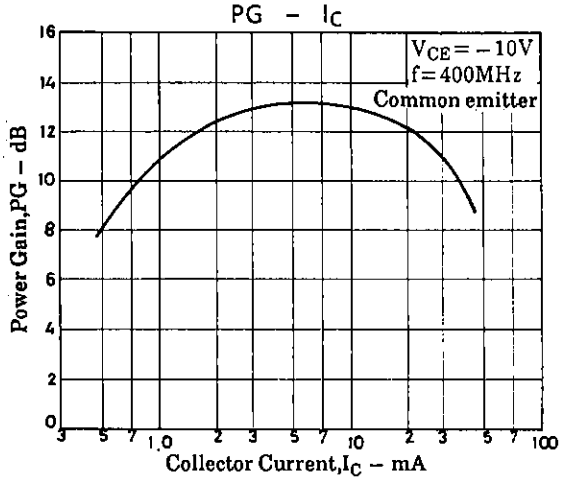

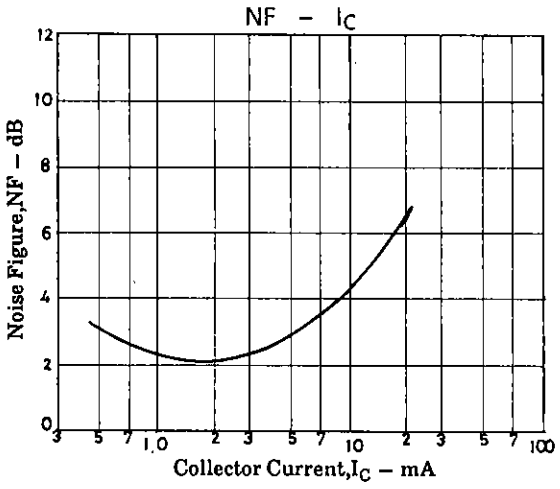

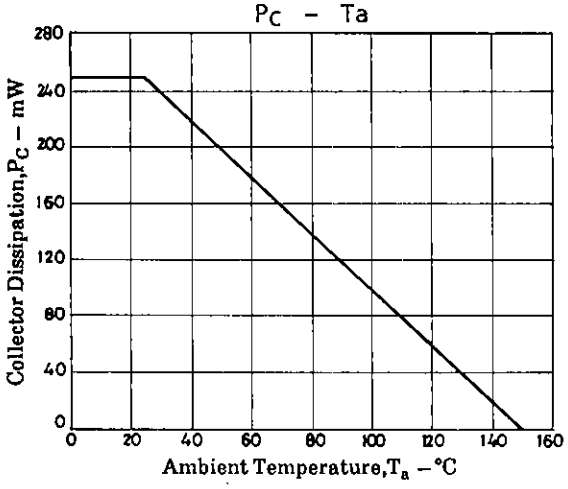

S Parameter

S11e : $V_{CE} = -10V$
f = 100MHz, 200~1200MHz (200MHz step)

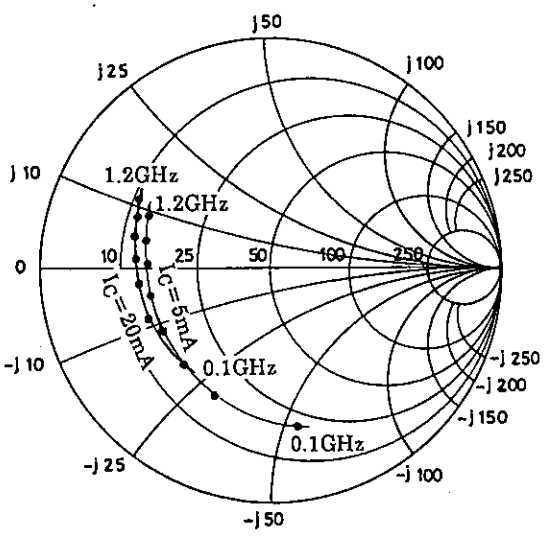

S12e : $V_{CE} = -10V$
f = 100MHz, 200~1200MHz (200MHz step)

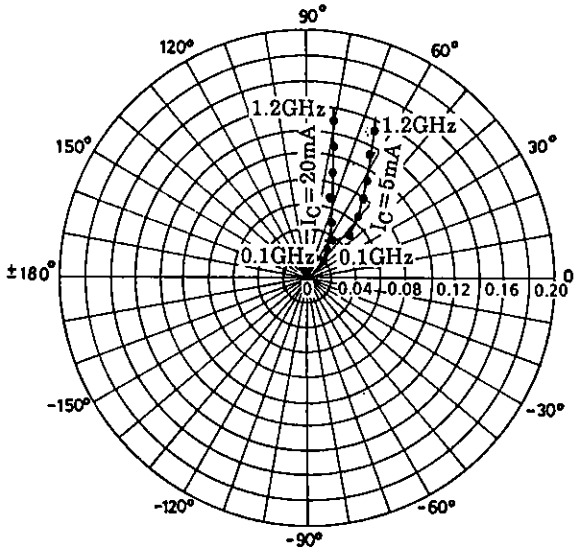

S21e : $V_{CE} = -10V$
f = 100MHz, 200~1200MHz (200MHz step)

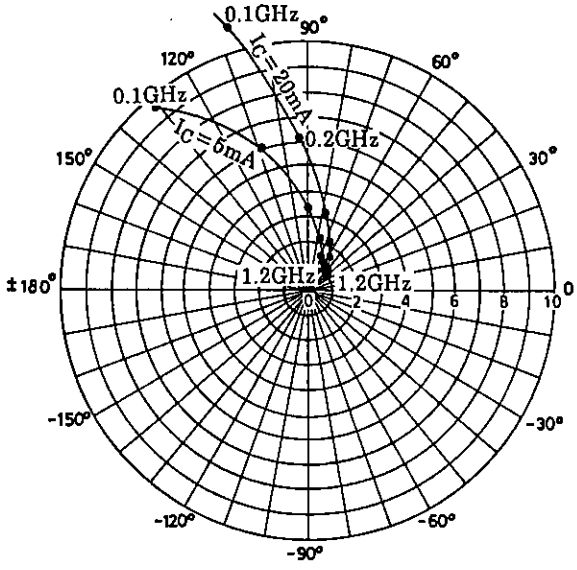

S22e : $V_{CE} = -10V$
f = 100MHz, 200~1200MHz (200MHz step)

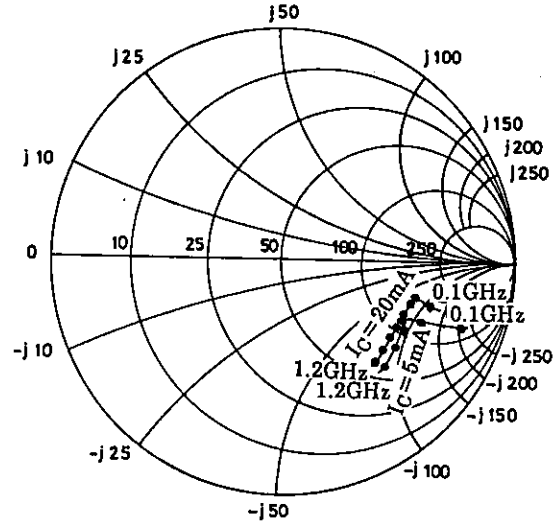

S Parameter (Common emitter)
$V_{CE} = -10V$, $I_C = -5mA$, $Zo = 50\Omega$

Freq. (MHz)	S_{11}		S_{21}		S_{12}		S_{22}	
	MAG	ANG	MAG	ANG	MAG	ANG	MAG	ANG
100	0.685	−79.5	9.506	130.8	0.039	55.5	0.770	−19.6
200	0.594	−117.7	6.031	108.6	0.052	45.9	0.670	−21.2
400	0.554	−154.4	3.349	89.0	0.065	48.3	0.599	−22.8
600	0.551	−170.6	2.331	76.1	0.079	53.9	0.579	−26.4
800	0.555	179.4	1.823	65.9	0.095	58.8	0.575	−31.4
1000	0.568	169.6	1.496	57.0	0.112	62.5	0.576	−37.3
1200	0.581	162.5	1.292	48.9	0.132	65.8	0.579	−43.6

$V_{CE} = -10V$, $I_C = -20mA$, $Zo = 50\Omega$

Freq (MHz)	S_{11}		S_{21}		S_{12}		S_{22}	
	MAG	ANG	MAG	ANG	MAG	ANG	MAG	ANG
100	0.566	−134.4	11.446	110.0	0.022	51.6	0.660	−16.2
200	0.579	−159.2	6.160	92.9	0.030	56.4	0.600	−14.3
400	0.599	−175.8	3.152	77.2	0.047	66.3	0.586	−16.4
600	0.613	174.8	2.128	65.9	0.066	71.2	0.591	−21.4
800	0.632	167.3	1.618	56.4	0.084	75.3	0.601	−27.8
1000	0.645	160.0	1.305	47.6	0.106	77.8	0.610	−34.7
1200	0.663	153.9	1.097	40.4	0.130	79.9	0.620	−42.0

■ No products described or contained herein are intended for use in surgical implants, life-support systems, aerospace equipment, nuclear power control systems, vehicles, disaster/crime-prevention equipment and the like, the failure of which may directly or indirectly cause injury, death or property loss.

■ Anyone purchasing any products described or contained herein for an above-mentioned use shall:
① Accept full responsibility and indemnify and defend SANYO ELECTRIC CO., LTD., its affiliates, subsidiaries and distributors and all their officers and employees, jointly and severally, against any and all claims and litigation and all damages, cost and expenses associated with such use:
② Not impose any responsibility for any fault or negligence which may be cited in any such claim or litigation on SANYO ELECTRIC CO., LTD., its affiliates, subsidiaries and distributors or any of their officers and employees jointly or severally.

■ Information (including circuit diagrams and circuit parameters) herein is for example only; it is not guaranteed for volume production. SANYO believes information herein is accurate and reliable, but no guarantees are made or implied regarding its use or any infringements of intellectual property rights or other rights of third parties.