ShenZhen HuaXinAn Electronics Co.,Ltd (Ø12x4.5mm)

High Impulse Current Gas Discharge Tubes **20KA / 40KA**

1：Dimension(mm) **Fast Delivery Time**

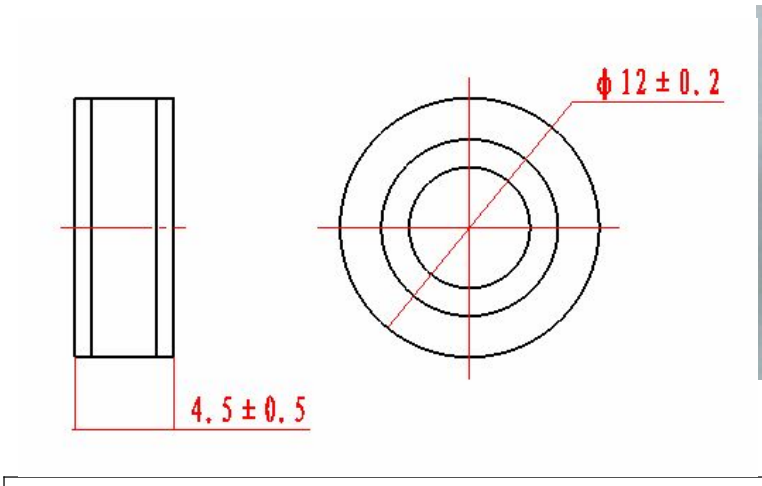



Specification of 2R12S-600H		
Nominal Dc spark-over voltage (100V/s)	480V-720V	
impulse spark-over voltage 5KV/μs (1.2/50us, 6KV)	＜1500V	
Nominal impulse discharge current 8/20μs 20 times	20KA	
Maximum nominal impulse discharge current 8/20μs 2times	40KA	
TOV behaviour (1200V 1 operation 50HZ 200ms)	＜300A	
Follow current behaviour 50/60HZ 260V	100A	
Maximum capacitance (1MHz)	＜1.5pF	
Minimum insulation resistance@ 100V	10000MΩ	
Weight	~ 4g	
Operation and storage temperature	-40℃ …+90℃	
Marking, green	2R 600 15	600 - Nominal voltage 15 - Year of production