6 Lake Street, Lawrence, MA 01841
1-800-446-1158 / (978) 620-2600 / Fax: (978) 689-0803
Website: http: //www.microsemi.com

Gort Road Business Park, Ennis, Co. Clare, Ireland
Tel: +353 (0) 65 6840044 Fax: +353 (0) 65 6822298

TECHNICAL DATA SHEET

N-CHANNEL MOSFET

Qualified per MIL-PRF-19500/592

DEVICES

2N7227 2N7227U

LEVELS

JAN
JANTX
JANTXV

ABSOLUTE MAXIMUM RATINGS (T_C = +25°C unless otherwise noted)

Parameters / Test Conditions	Symbol	Value	Unit
Drain – Source Voltage	V_{DS}	400	Vdc
Gate – Source Voltage	V_{GS}	± 20	Vdc
Continuous Drain Current T_C = +25°C	I_{D1}	14.0	Adc
Continuous Drain Current T_C = +100°C	I_{D2}	9.0	Adc
Max. Power Dissipation T_C = +25°C	P_{tl}	150 (1)	W
Drain to Source On State Resistance	$R_{ds(on)}$	0.315 (2)	Ω
Operating & Storage Temperature	T_{op}, T_{stg}	-55 to +150	°C

Note: (1) Derated Linearly by 1.2 W/°C for T_C > +25°C
(2) V_{GS} = 10Vdc, I_D = 9A

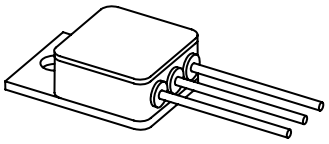

TO-254AA

ELECTRICAL CHARACTERISTICS *(T_A = +25°C, unless otherwise noted)*

Parameters / Test Conditions	Symbol	Min.	Max.	Unit
Drain-Source Breakdown Voltage V_{GS} = 0V, I_D = 1mAdc	$V_{(BR)DSS}$	400		Vdc
Gate-Source Voltage (Threshold) $V_{DS} \geq V_{GS}$, I_D = 0.25mA $V_{DS} \geq V_{GS}$, I_D = 0.25mA, T_j = +125°C $V_{DS} \geq V_{GS}$, I_D = 0.25mA, T_j = -55°C	 $V_{GS(th)1}$ $V_{GS(th)2}$ $V_{GS(th)3}$	 2.0 1.0	 4.0 5.0	Vdc
Gate Current V_{GS} = ±20V, V_{DS} = 0V V_{GS} = ±20V, V_{DS} = 0V, T_j = +125°C	 I_{GSS1} I_{GSS2}		 ±100 ±200	nAdc
Drain Current V_{GS} = 0V, V_{DS} = 320V V_{GS} = 0V, V_{DS} = 320V, T_j = +125°C	 I_{DSS1} I_{DSS2}		 25 0.25	 µAdc mAdc
Static Drain-Source On-State Resistance V_{GS} = 10V, I_D = 9.0A pulsed V_{GS} = 10V, I_D = 14.0A pulsed T_j = +125°C V_{GS} = 10V, I_D = 9.0A pulsed	 $r_{DS(on)1}$ $r_{DS(on)2}$ $r_{DS(on)3}$		 0.315 0.415 0.68	 Ω Ω Ω
Diode Forward Voltage V_{GS} = 0V, I_D = 14A pulsed	V_{SD}		1.7	Vdc

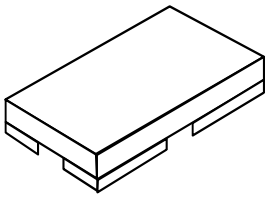

U-PKG (U3)
TO-276AB

6 Lake Street, Lawrence, MA 01841
1-800-446-1158 / (978) 620-2600 / Fax: (978) 689-0803
Website: http: //www.microsemi.com

Gort Road Business Park, Ennis, Co. Clare, Ireland
Tel: +353 (0) 65 6840044 Fax: +353 (0) 65 6822298

DYNAMIC CHARACTERISTICS

Parameters / Test Conditions		Symbol	Min.	Max.	Unit
Gate Charge: On-State Gate Charge Gate to Source Charge Gate to Drain Charge	V_{GS} = 10V, I_D = 14A V_{DS} = 50V	 $Q_{g(on)}$ Q_{gs} Q_{gd}		 110 18 65	nC

SWITCHING CHARACTERISTICS

Parameters / Test Conditions		Symbol	Min.	Max.	Unit
Switching time tests: Turn-on delay time Rinse time Turn-off delay time Fall time	I_D = 14A, V_{GS} = 10Vdc, Gate drive impedance = 7.5Ω, V_{DD} = 200Vdc	 $t_{d(on)}$ t_r $t_{d(off)}$ t_f		 35 190 170 130	ns
Diode Reverse Recovery Time	di/dt ≤ 100A/µs, V_{DD} ≤ 30V, I_F = 14A	t_{rr}		1200	ns

6 Lake Street, Lawrence, MA 01841
1-800-446-1158 / (978) 620-2600 / Fax: (978) 689-0803
Website: http: //www.microsemi.com

Gort Road Business Park, Ennis, Co. Clare, Ireland
Tel: +353 (0) 65 6840044 Fax: +353 (0) 65 6822298

PACKAGE DIMENSIONS

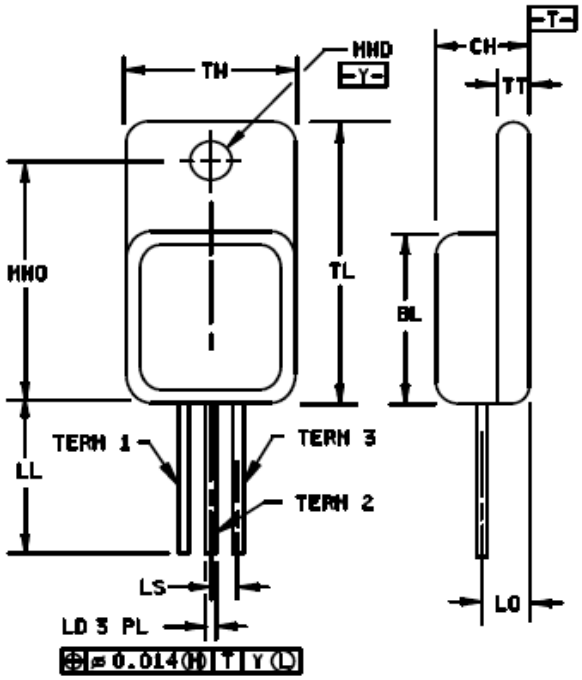

Ltr.	Dimensions				Note
	Inches		Millimeters		
	Min	Max	Min	Max	
BL	.535	.545	13.59	13.84	
CH	.249	.260	6.32	6.60	
LD	.035	.045	0.89	1.14	
LL	.510	.570	12.95	14.48	
LO	.150 BSC		3.81 BSC		
LS	.150 BSC		3.81 BSC		
MHD	.139	.149	3.53	3.78	
MHO	.665	.685	16.89	17.40	
TL	.790	.800	20.07	20.32	3, 4
TT	.040	.050	1.02	1.27	
TW	.535	.545	13.59	13.84	3, 4
Term 1	Drain				
Term 2	Source				
Term 3	Gate				

NOTES:

1. Dimensions are in inches.
2. Millimeters are given for general information only.
3. Glass meniscus included in dimension D and E.
4. All terminals are isolated from the case.
5. In accordance with ASME Y14.5M, diameters are equivalent to φx symbology.

FIGURE 1. Physical dimensions for TO-254AA

6 Lake Street, Lawrence, MA 01841
1-800-446-1158 / (978) 620-2600 / Fax: (978) 689-0803
Website: http: //www.microsemi.com

Gort Road Business Park, Ennis, Co. Clare, Ireland
Tel: +353 (0) 65 6840044 Fax: +353 (0) 65 6822298

PACKAGE DIMENSIONS

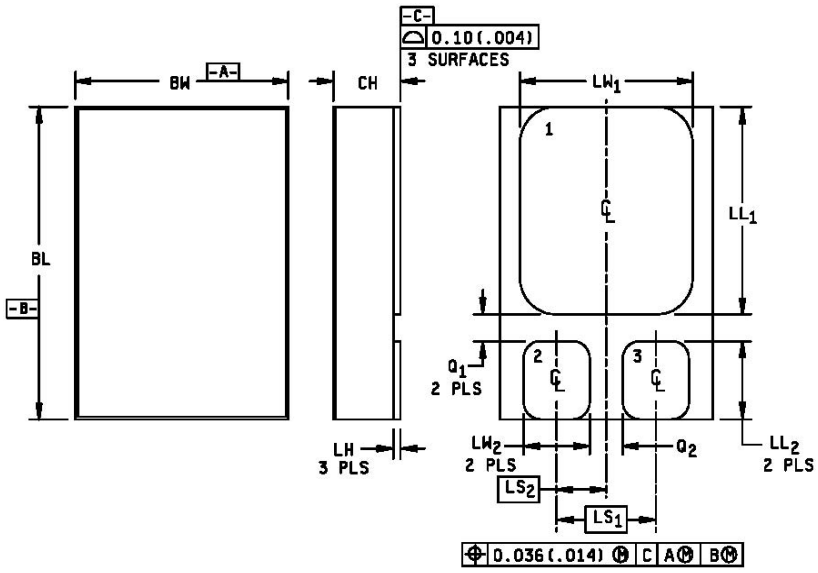

Ltr.	Dimensions			
	Inches		Millimeters	
	Min	Max	Min	Max
BL	.620	.630	15.75	16.00
BW	.445	.455	11.30	11.56
CH		.142		3.60
LH	.010	.020	0.26	0.50
LL_1	.410	.420	10.41	10.67
LL_2	.152	.162	3.86	4.11
LS_1	.210 BSC		5.33 BSC	
LS_2	.105 BSC		2.67 BSC	
LW_1	.370	.380	9.40	9.65
LW_2	.135	.145	3.43	3.68
Q_1	.030		0.76	
Q_2	.035		0.89	
Term 1	Drain			
Term 2	Source			
Term 3	Gate			

NOTES:

1. Dimensions are in inches.
2. Millimeters are given for information only.
3. The lid shall be electrically isolated from the drain, gate and source.
4. In accordance with ASME Y14.5M, diameters are equivalent to φx symbology.

FIGURE 2. Dimensions and configuration of surface mount package outline (TO-276AB) 2N7224U, 2N7225U, 2N7227U, and 2N7228U.