2A, 600V N-CHANNEL POWER MOSFET

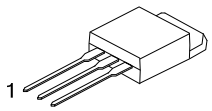

TO-251

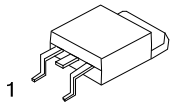

TO-252

■ DESCRIPTION

The UTC **2N60ZL** is a high voltage MOSFET and is designed to have better characteristics, such as fast switching time, low gate charge, low on-state resistance and have a high rugged avalanche characteristics. This power MOSFET is usually used at high speed switching applications in power supplies, PWM motor controls, high efficient DC to DC converters and bridge circuits.

■ FEATURES

* $R_{DS(ON)}$ = 5Ω@V_{GS} = 10V
* Ultra Low gate charge (typical 9.0nC)
* Low reverse transfer capacitance (C_{RSS} = typical 5.0 pF)
* Fast switching capability
* Avalanche energy specified
* Improved dv/dt capability, high ruggedness

■ SYMBOL

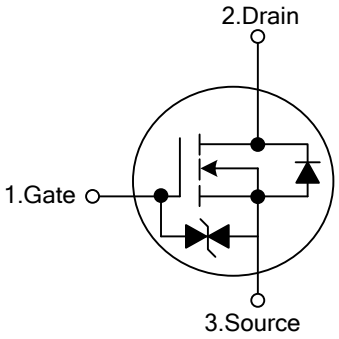

■ ORDERING INFORMATION

Ordering Number		Package	Pin Assignment			Packing
Lead Free	Halogen Free		1	2	3	
2N60ZLL-TM3-T	2N60ZLG-TM3-T	TO-251	G	D	S	Tube
2N60ZLL-TN3-R	2N60ZLG-TN3-R	TO-252	G	D	S	Tape Reel

Note: Pin Assignment: G: Gate D: Drain S: Source

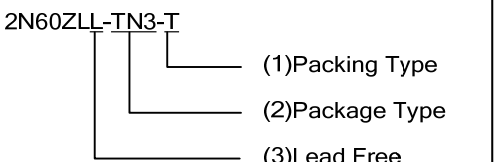

(1) T: Tube, R: Tape Reel

(2) TM3: TO-251, TN3: TO-252

(3) G: Halogen Free, L: Lead Free

Copyright © 2012 Unisonic Technologies Co., Ltd

■ ABSOLUTE MAXIMUM RATINGS (T_C = 25°C, unless otherwise specified)

PARAMETER		SYMBOL	RATINGS	UNIT
Drain-Source Voltage		V_{DSS}	600	V
Gate-Source Voltage		V_{GSS}	±20	V
Avalanche Current (Note 2)		I_{AR}	2.0	A
Drain Current	Continuous	I_D	2.0	A
	Pulsed (Note 2)	I_{DM}	8.0	A
Avalanche Energy	Single Pulsed (Note 3)	E_{AS}	140	mJ
	Repetitive (Note 2)	E_{AR}	4.5	mJ
Peak Diode Recovery dv/dt (Note 4)		dv/dt	4.5	V/ns
Power Dissipation	TO-251/TO-252	P_D	44	W
Junction Temperature		T_J	+150	°C
Ambient Operating Temperature		T_{OPR}	-55 ~ +150	°C
Storage Temperature		T_{STG}	-55 ~ +150	°C

Notes: 1. Absolute maximum ratings are those values beyond which the device could be permanently damaged. Absolute maximum ratings are stress ratings only and functional device operation is not implied.
2. Repetitive Rating : Pulse width limited by T_J
3. L=64mH, I_{AS}=2.0A, V_{DD}=50V, R_G=25 Ω, Starting T_J = 25°C
4. I_{SD}≤2.4A, di/dt≤200A/μs, V_{DD} ≤ BV_{DSS}, Starting T_J = 25°C

■ THERMAL DATA

PARAMETER		SYMBOL	RATINGS	UNIT
Junction to Ambient	TO-251/TO-252	θ_{JA}	100	°C/W
Junction to Case	TO-251/TO-252	θ_{Jc}	2.87	°C/W

■ ELECTRICAL CHARACTERISTICS (T_J=25°C, unless otherwise specified)

PARAMETER		SYMBOL	TEST CONDITIONS	MIN	TYP	MAX	UNIT
OFF CHARACTERISTICS							
Drain-Source Breakdown Voltage		BV_{DSS}	V_{GS} = 0V, I_D = 250μA	600			V
Drain-Source Leakage Current		I_{DSS}	V_{DS} = 600V, V_{GS} = 0V			10	μA
Gate-Source Leakage Current	Forward	I_{GSS}	V_{GS} = 20V, V_{DS} = 0V			5	μA
	Reverse		V_{GS} = -20V, V_{DS} = 0V			-5	μA
Breakdown Voltage Temperature Coefficient		$\triangle BV_{DSS}/\triangle T_J$	I_D=250μA, Referenced to 25°C		0.4		V/°C
ON CHARACTERISTICS							
Gate Threshold Voltage		$V_{GS(TH)}$	V_{DS} = V_{GS}, I_D = 250μA	2.0		4.0	V
Static Drain-Source On-State Resistance		$R_{DS(ON)}$	V_{GS} = 10V, I_D =1A		4.2	5	Ω
DYNAMIC CHARACTERISTICS							
Input Capacitance		C_{ISS}	V_{DS} =25V, V_{GS} =0V, f =1MHz		270	350	pF
Output Capacitance		C_{OSS}			40	50	pF
Reverse Transfer Capacitance		C_{RSS}			5	7	pF
SWITCHING CHARACTERISTICS							
Turn-On Delay Time		$t_{D\ (ON)}$	V_{DD} =300V, I_D =2.4A, R_G=25Ω (Note 1, 2)		10	30	ns
Turn-On Rise Time		t_R			25	60	ns
Turn-Off Delay Time		$t_{D(OFF)}$			20	50	ns
Turn-Off Fall Time		t_F			25	60	ns
Total Gate Charge		Q_G	V_{DS}=480V, V_{GS}=10V, I_D=2.4A (Note 1, 2)		9.0	11	nC
Gate-Source Charge		Q_{GS}			1.6		nC
Gate-Drain Charge		Q_{GD}			4.3		nC
DRAIN-SOURCE DIODE CHARACTERISTICS							
Drain-Source Diode Forward Voltage		V_{SD}	V_{GS} = 0 V, I_{SD} = 2.0 A			1.4	V
Continuous Drain-Source Current		I_{SD}				2.0	A
Pulsed Drain-Source Current		I_{SM}				8.0	A
Reverse Recovery Time		t_{RR}	V_{GS} = 0 V, I_{SD} = 2.4A, di/dt = 100 A/μs (Note1)		180		ns
Reverse Recovery Charge		Q_{RR}			0.72		μC

Notes: 1. Pulse Test: Pulse width ≤ 300μs, Duty cycle≤2%
2. Essentially independent of operating temperature

■ TEST CIRCUITS AND WAVEFORMS

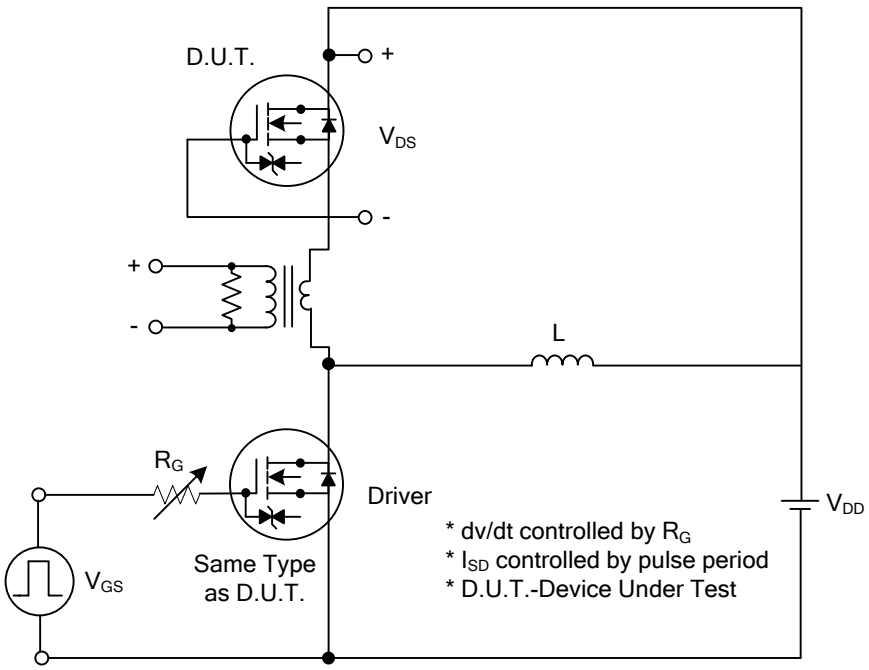

Peak Diode Recovery dv/dt Test Circuit

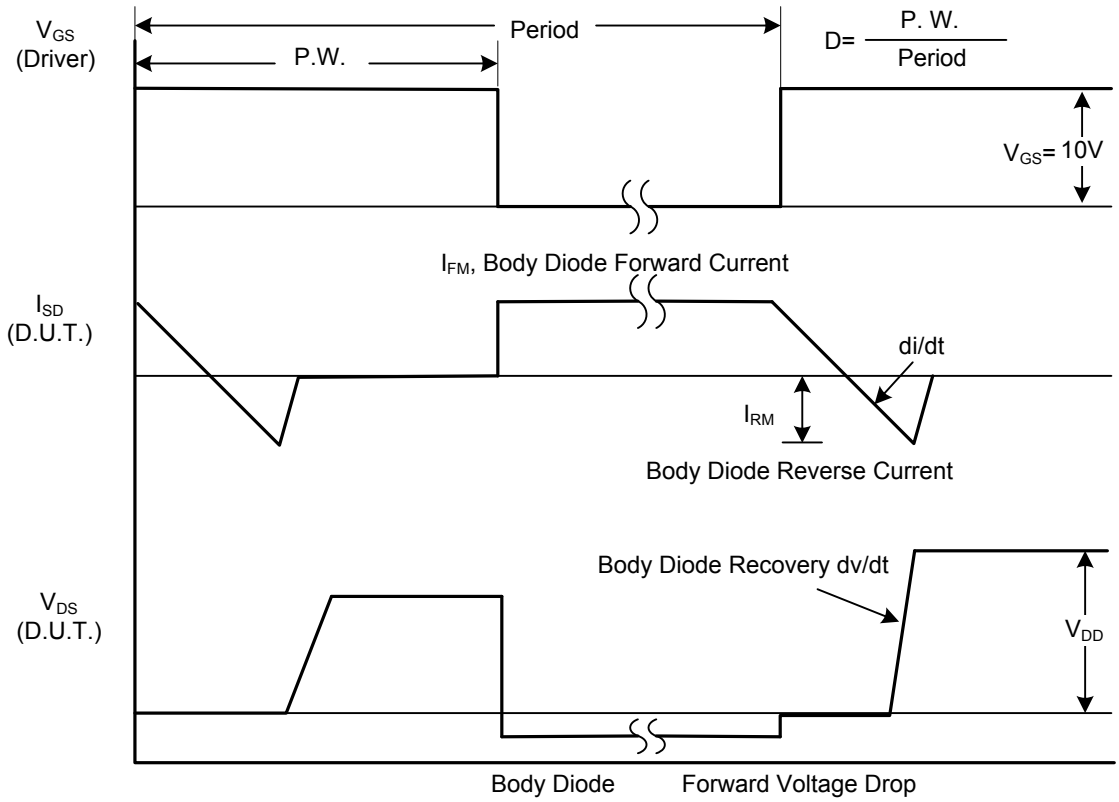

Peak Diode Recovery dv/dt Waveforms

■ TEST CIRCUITS AND WAVEFORMS (Cont.)

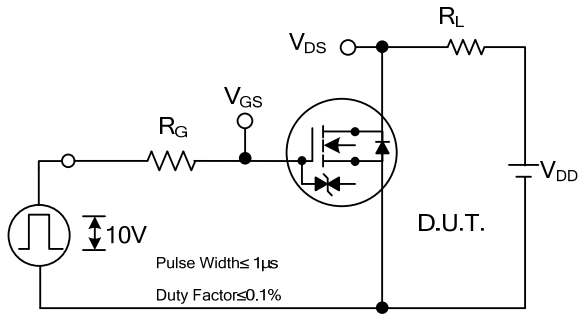

Switching Test Circuit

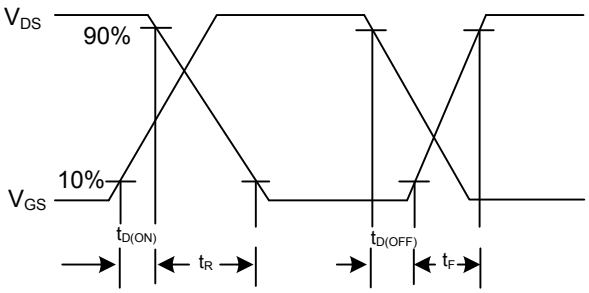

Switching Waveforms

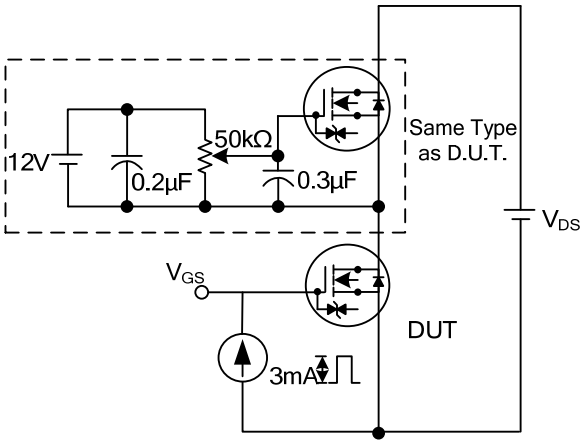

Gate Charge Test Circuit

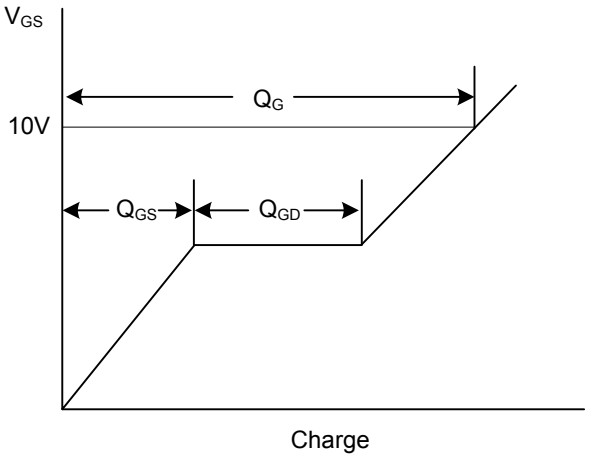

Gate Charge Waveform

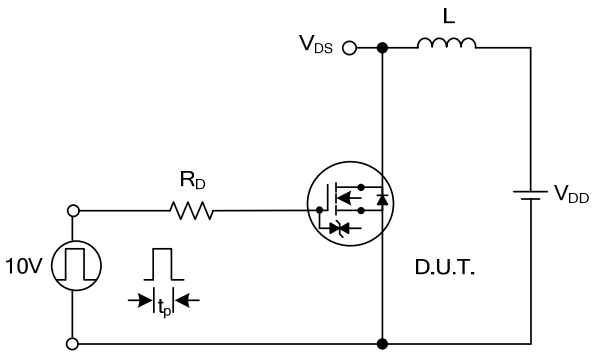

Unclamped Inductive Switching Test Circuit

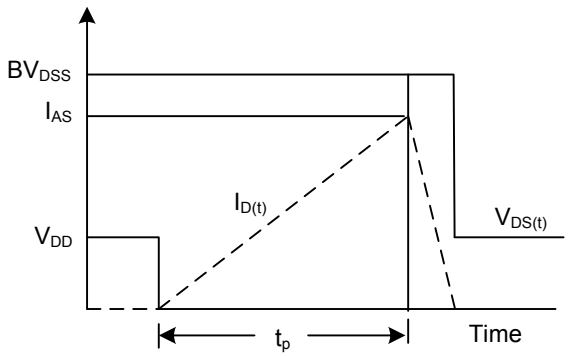

Unclamped Inductive Switching Waveforms

■ TYPICAL CHARACTERISTICS

Drain Current vs. Drain-Source Breakdown Voltage

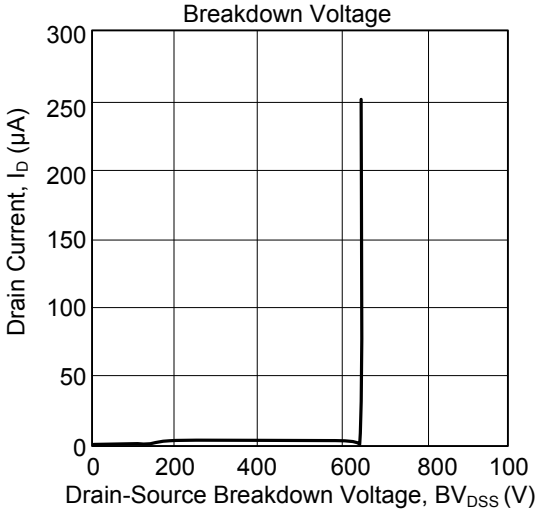

Drain Current vs. Gate Threshold Voltage

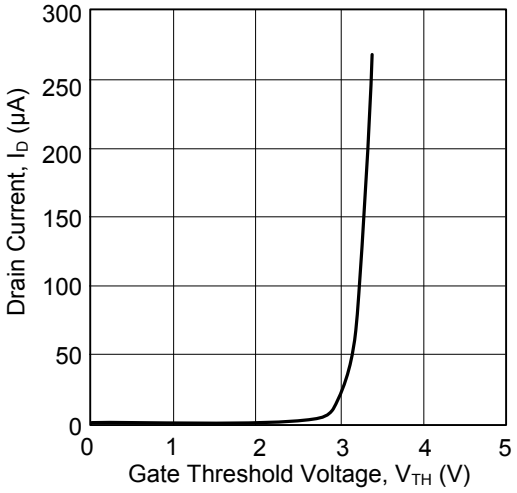

Drain-Source On-State Resistance Characteristics

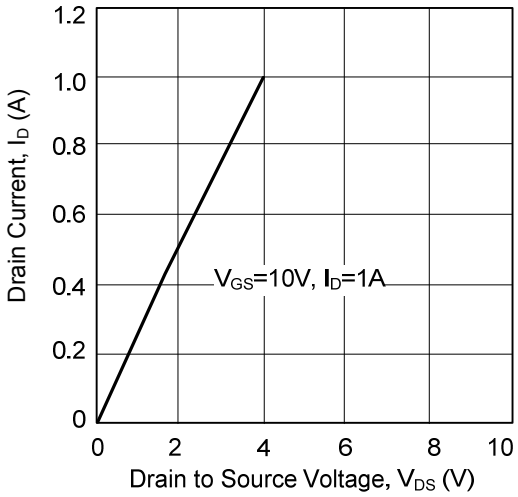

Drain Current vs. Source to Drain Voltage

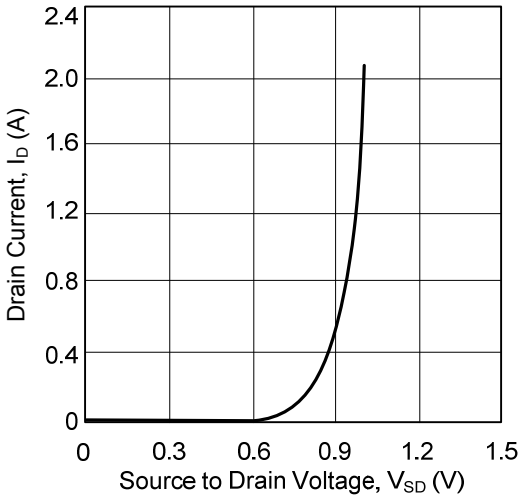

UTC assumes no responsibility for equipment failures that result from using products at values that exceed, even momentarily, rated values (such as maximum ratings, operating condition ranges, or other parameters) listed in products specifications of any and all UTC products described or contained herein. UTC products are not designed for use in life support appliances, devices or systems where malfunction of these products can be reasonably expected to result in personal injury. Reproduction in whole or in part is prohibited without the prior written consent of the copyright owner. The information presented in this document does not form part of any quotation or contract, is believed to be accurate and reliable and may be changed without notice.