SILICON POWER DARLINGTON TRANSISTORS

(PNP) 2N6034, 2N6035, 2N6036
(NPN) 2N6037, 2N6038, 2N6039

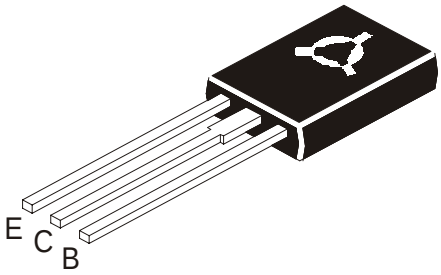

TO126
Plastic Package

Designed for General -Purpose Amplifier & Low Speed Switching Applications.

ABSOLUTE MAXIMUM RATINGS(Ta=25ºC unless specified otherwise)

DESCRIPTION	SYMBOL	2n6034 2N6035 2N6036 2n6037 2N6038 2N6039	UNIT
Collector -Base Voltage	V_{CBO}	40 60 80	V
Collector -Emitter Voltage	V_{CEO}	40 60 80	V
Emitter Base Voltage	V_{EBO}	5.0	V
Collector Current Continuous	I_C	4.0	A
Collector Current (Peak Value)		8.0	A
Base Current	I_B	100	mA
Total Power Dissipation @ Tc=25ºC	P_D	40	W
Derate above 25°C		0.32	W/ºC
Total Power Dissipation @ Ta=25ºC	P_D	1.5	W
Derate above 25°C		0.012	W/ºC
Operating And Storage Junction Temperature Range	T_j, T_{stg}	-65 to +150	ºC
THERMAL RESISTANCE			
Junction to ambient	$R_{th(j-a)}$	83.3	ºC/W
Junction to case	$R_{th(j-c)}$	3.12	ºC/W

ELECTRICAL CHARACTERISTICS (Ta=25ºC unless specified otherwise)

DESCRIPTION	SYMBOL	TEST CONDITION	MIN	TYP	MAX	UNIT
Collector Emitter (sus) Voltage	$V_{CEO(sus)}$	I_C=100mA, I_B=0				
2N6034,2N6037			40			V
2N6035, 2N6038			60			V
2N6036, 2N6039			80			V
Collector Cut off Current						
2N6034,2N6037	I_{CEO}	V_{CE}=40V, I_B=0			100	µA
2N6035, 2N6038		V_{CE}=60V, I_B=0			100	µA
2N6036, 2N6039		V_{CE}=80V, I_B=0			100	µA

SILICON POWER DARLINGTON TRANSISTORS

(PNP) 2N6034, 2N6035, 2N6036
(NPN) 2N6037, 2N6038, 2N6039

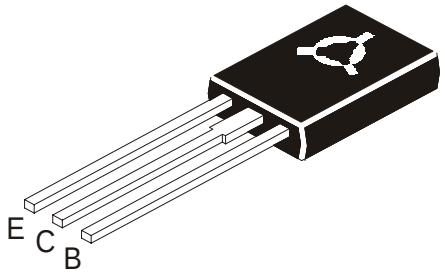

TO126
Plastic Package

DESCRIPTION		SYMBOL	TEST CONDITION	MIN	TYP	MAX	UNIT
	2N6034,2N6037	I_{CEX}	V_{CE}=40V,V_{BE}(off)=1.5V			100	µA
	2N6035, 2N6038		V_{CE}=60V,V_{BE}(off)=1.5V			100	µA
	2N6036, 2N6039		V_{CE}=80V,V_{BE}(off)=1.5V			100	µA
			Tc=125°C				
	2N6034,2N6037		V_{CE}=40V,V_{BE}(off)=1.5V			500	µA
	2N6035, 2N6038		V_{CE}=60V,V_{BE}(off)=1.5V			500	µA
	2N6036, 2N6039		V_{CE}=80V,V_{BE}(off)=1.5V			500	µA
Collector cut off Current							
	2N6034,2N6037	I_{CBO}	V_{CB}=40, I_E=0			0.5	mA
	2N6035, 2N6038		V_{CB}=60, I_E=0			0.5	mA
	2N6036, 2N6039		V_{CB}=80, I_E=0			0.5	mA
Emitter Cut off Current		I_{EBO}	V_{BE}=5V,I_C=0			2.0	mA
DC Current Gain		h_{FE}	I_C=0.5A, V_{CE}=3V	500			
			I_C=2A, V_{CE}=3V	750		15000	
			I_C=4A, V_{CE}=3V	100			
Collector Emitter Saturation Voltage		$V_{CE(Sat)}$	I_C=2A,I_B=8mA			2.0	V
			I_C=4A,I_B=40mA			3.0	V
Base Emitter Saturation Voltage		V_{BE}(sat)	I_C=4A,I_B=40mA			4.0	V
Base Emitter on Voltage		V_{BE}(on)	I_C=2A,I_B=V_{CE}=3V			2.8	V
Dynamic Characteristics							
Small Signal Current Gain		I hfe I	I_C=0.75A,V_{CE}=10V	25			
			f=1MHz				
Output Capacitance		C_{ob}	VCB=10V, IE=0,				
	PNP		f=0.1MHz			200	pF
	NPN					100	pF

TO126
Plastic Package

TO-126 (SOT-32) Plastic Package

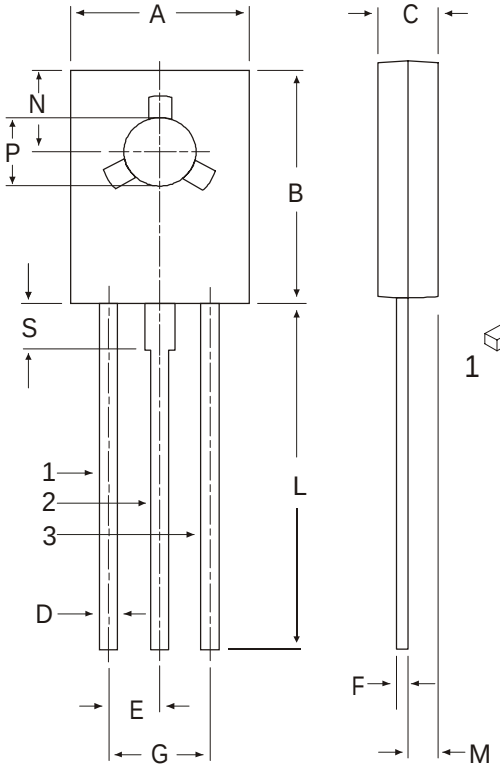

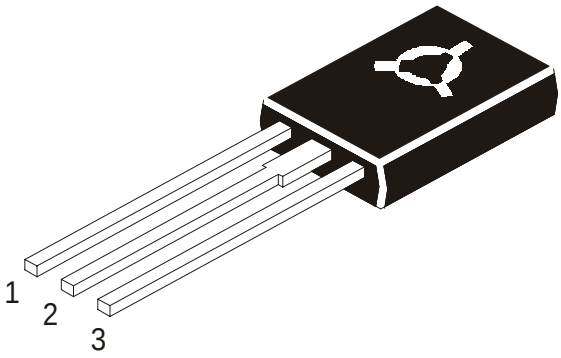

Pin Configuration

1. Emitter
2. Collector
3. Base

DIM	MIN	MAX
A	7.4	7.8
B	10.5	10.8
C	2.4	2.7
D	0.7	0.9
E	2.25 TYP.	
F	0.49	0.75
G	4.5 TYP.	
L	15.7 TYP.	
M	1.27 TYP.	
N	3.75 TYP.	
P	3.0	3.2
S	2.5 TYP.	

All diminsions in mm.

Packing Detail

PACKAGE	STANDARD PACK		INNER CARTON BOX		OUTER CARTON BOX		
	Details	Net Weight/Qty	Size	Qty	Size	Qty	Gr Wt
TO-126 Bulk	500 pcs/polybag	340 gm/500 pcs	3" x 7.5" x 7.5"	2K	17" x 15" x 13.5"	32K	31 kgs
TO-126 Tube	50 pcs/tube	73 gm/50 pcs	3" x 3.7" x 21.5"	1K	19" x 19" x 19"	10K	15 kgs

TO126

Plastic Package

Disclaimer

The product information and the selection guides facilitate selection of the CDIL's Discrete Semiconductor Device(s) best suited for application in your product(s) as per your requirement. It is recommended that you completely review our Data Sheet(s) so as to confirm that the Device(s) meet functionality parameters for your application. The information furnished in the Data sheet and on the CDIL Web Site/CD is believed to be accurate and reliable. CDIL however, does not assume responsibility for inaccuracies or incomplete information. Furthermore, CDIL does not assume liability whatsoever, arising out of the application or use of any CDIL product; neither does it convey any license under its patent rights nor rights of others. These products are not designed for use in life saving/support appliances or systems. CDIL customers selling these products (either as individual Discrete Semiconductor Devices or incorporated in their end products), in any life saving/support appliances or systems or applications do so at their own risk and CDIL will not be responsible for any damages resulting from such sale(s).

CDIL strives for continuous improvement and reserves the right to change the specifications of its products without prior notice.

CDIL is a registered Trademark of

Continental Device India Limited

C-120 Naraina Industrial Area, New Delhi 110 028, India.

Telephone + 91-11-2579 6150, 5141 1112 Fax + 91-11-2579 5290, 5141 1119

email@cdil.com www.cdilsemi.com